JUMO GmbH & Co. KG
Delivery address: Mackenrodtstraße 14
36039 Fulda, Germany
Postal address: 36035 Fulda, Germany
Phone: +49 661 6003-0
Fax: +49 661 6003-607
Email: mail@jumo.net
Internet: www.jumo.net

JUMO UK LTD
JUMO House
Temple Bank, Riverway
Harlow, Essex, CM20 2DY, UK
Phone: +44 1279 63 55 33
Fax: +44 1279 62 50 29
Email: sales@jumo.co.uk
Internet: www.jumo.co.uk

JUMO Process Control, Inc.
6724 Joy Road
East Syracuse, NY 13057, USA
Phone: +1 315 437 5866
Fax: +1 315 437 5860
Email: info.us@jumo.net
Internet: www.jumousa.com

JUMO PROCESStemp

RTD temperature probes for process technology with Ex approval

Description

RTD temperature probes for process technology (in chemical plants, petrochemical industry, pressure vessels, etc.) are predominantly used for temperature measurement in liquids and gases.

The RTD temperature probes consist of a protection fitting according to DIN 43772 with various process connections, a terminal head, and an interchangeable measuring insert. The protection fitting is made of material 1.4571 as standard. Other materials are available for special applications.

All fittings are produced according to the German pressure vessel regulation ("Druckbehälterverordnung") and subjected to a pressure and leak test. The measuring insert is fitted with a Pt100 temperature sensor as a standard feature according to DIN EN 60751:2009 / IEC 60751:2008 (temperature coefficient $\alpha = 3.850 \times 10^{-3}$° C^{-1}), Class B in two-wire circuit; versions with two Pt100 measuring circuits can also be supplied, as well as three and four-wire circuits.

An analog or programmable transmitter with standard signal 4 to 20 mA can be installed for the transmission of measured values. Alternatively a HART® interface can be used.

Versions with flameproof enclosure or intrinsic safety are available for temperature measurement in potentially explosive areas.

For documentation purposes, the device parameters (measurement tolerance, material, etc.) can be confirmed with factory test certificates.

Push-in and screw-in RTD temperature probes with connection line and Ex approval are available upon request.

Note:
The specified operating temperatures are maximum values based on the applied sensing element. Operating temperatures in Ex areas are severely restricted. When determining the respective maximum operating temperature, please consult the operating manual (Chapter 5).

An RTD temperature probe that is installed in a separating wall between zone 0/1 (gas) and 20/21 (dust) and which does not have a protection tube with a zone separation of 1 mm stainless steel (extra code 292) requires the user to make sure that the complete measuring circuit corresponds to the intrinsically safe "ia" ignition protection type.

Explosion protection:
The maximum product-specific explosion protection depends on the design type of the RTD temperature probe. For an exact classification of the RTD temperature probe, please refer to the operating manual.

Special features

- For temperatures from -200 to +600 °C
- With protection tubes made of stainless steel, titanium, tantalum, Inconel, and HASTELLOY®
- Available with two-wire transmitter (4 to 20 mA/HART®) in Ex version
- Ⓔx II 1/2 G Ex ia IIC T1...T6 Ga/Gb
  Ⓔx II 1/2 D Ex ia IIIC T80 °C...T400 °C Da/Db
  Ⓔx II 1/2 G Ex ia/d IIC T1...T6 Ga/Gb
  Ⓔx II 1/2 D Ex ia/tb IIIC T80 °C...T400 °C
- With interchangeable measuring insert (not for Ex basic types)

Approval marks and certificates

JUMO GmbH & Co. KG
Delivery address: Mackenrodtstraße 14
36039 Fulda, Germany
Postal address: 36035 Fulda, Germany
Phone: +49 661 6003-0
Fax: +49 661 6003-607
Email: mail@jumo.net
Internet: www.jumo.net

JUMO UK LTD
JUMO House
Temple Bank, Riverway
Harlow, Essex, CM20 2DY, UK
Phone: +44 1279 63 55 33
Fax: +44 1279 62 50 29
Email: sales@jumo.co.uk
Internet: www.jumo.co.uk

JUMO Process Control, Inc.
6724 Joy Road
East Syracuse, NY 13057, USA
Phone: +1 315 437 5866
Fax: +1 315 437 5860
Email: info.us@jumo.net
Internet: www.jumousa.com

Technical data

Terminal head	Form B DIN EN 50446, aluminum die-cast, M20 × 1.5; IP65, ambient temperature -40 to +100 °C Form BUZ, aluminum die-cast, M20 × 1.5; IP65, ambient temperature -40 to +100 °C Form BUZH with or without LED display, aluminum die-cast, M20 × 1.5; IP65, ambient temperature -40 to +100 °C (with LED display -20 to +80 °C) Form BUZH with LED display and Ex approval, aluminum die-cast, M20 × 1.5; IP65, ambient temperature 0 to 60 °C Form BBKS, plastic (PA 6), M20 × 1.5; IP54, ambient temperature -30 bis +130 °C Form BEGF, stainless steel 1.4541, M20 × 1.5, IP65, ambient temperature -40 to +100°C Form XD "Ex d IIC"/"Ex tb IIIC" with or without LED display, stainless steel or aluminum die-cast, M20 × 1.5; IP66, ambient temperature -50 to +100 °C (with LED display -20 to +80 °C) Caution: reduced ambient temperature when using transmitters, data sheets 707010, 707030, 707050, 707060, and 707080
	Insofar as the design type allows it, yellow terminal heads are used for SIL and PL applications (extra codes 658 or 659). Exceptions to this are probes for use in alkaline environments and probes that are strictly required to be PWIS-free.
Extension tube	Stainless steel 1.4571
Process connection	Thread, stainless steel 1.4571 Flange, stainless steel 1.4571 Thermowell, stainless steel 1.4571 or steel 1.7335 Highly corrosion-resistant materials and coatings are optionally available
Protection tube	Stainless steel 1.4571, Ø 6 mm, Ø 9 mm, Ø 11 mm, or Ø 12 mm Highly corrosion-resistant materials and coatings are optionally available
Measuring insert	Exchangeable, Pt100 temperature sensor according to DIN DIN EN 60751:2009 / IEC 60751:2008, Class B, two-wire circuit
Response times	$t_{0.9}$ approx. 50 s, flow velocity in water 0.2 m/s, Ø 9 mm
Vibration resistance	20 g (peak-to-peak) at the tip of the measuring insert
Transmitters	Programmable transmitter, data sheet 707010 Analog transmitter, data sheet 707030 (not for the Ex area) Programmable transmitter, data sheet 707050 (not for the Ex area) Programmable two-channel transmitter with HART®/SIL, data sheet 707080 Programmable Wtrans B head transmitter with wireless data transmission, data sheet 707060 (not for the Ex area, suitable Wtrans receivers according to data sheet 902931)
Accessories	Thermowells, data sheet 909710

Functional safety

With this product, JUMO provides a number of different possibilities in terms of functional safety to realize a completely or partially certified solution.

If you require consulting with regard to the safety integrity level (SIL) or performance level (PL), you can contact us at sil@jumo.net to arrange a personal appointment.

The safety data (MTBF, MTTFD, and FIT values) can also be accessed on demand for this item under sensors@jumo.net.

JUMO GmbH & Co. KG
Delivery address: Mackenrodtstraße 14
36039 Fulda, Germany
Postal address: 36035 Fulda, Germany
Phone: +49 661 6003-0
Fax: +49 661 6003-607
Email: mail@jumo.net
Internet: www.jumo.net

JUMO UK LTD
JUMO House
Temple Bank, Riverway
Harlow, Essex, CM20 2DY, UK
Phone: +44 1279 63 55 33
Fax: +44 1279 62 50 29
Email: sales@jumo.co.uk
Internet: www.jumo.co.uk

JUMO Process Control, Inc.
6724 Joy Road
East Syracuse, NY 13057, USA
Phone: +1 315 437 5866
Fax: +1 315 437 5860
Email: info.us@jumo.net
Internet: www.jumousa.com

Approval marks and certificates

ATEX	
Test facility	Eurofins Electrosuisse Product Testing AG
Certificate/test no.	SEV 15 ATEX 0118
Inspection basis	EN 60079-0 + A11, EN 60079-1, EN 60079-11, EN 60079-26, EN 60079-31
Valid for	Extra code 362
IECEx	
Test facility	Eurofins Electrosuisse Product Testing AG
Certificate/test no.	IECEx SEV 15.0006
Inspection basis	IEC 60079-0, IEC 60079-1, IEC 60079-11, IEC 60079-26, IEC 60079-31
Valid for	Extra code 362
CCC	
Test facility	China Quality Certification Center
Certificate/test no.	2025012315801599 (Ex „i“) 2025012315806811 (Ex „d“)
Inspection basis	CNCA-C23-01:2024
Valid for	Extra code 362 and 084
SIL QUALIFIED	
Test facility	-
Certificate/test no.	-
Inspection basis	-
Valid for	Extra codes 658/659 in conjunction with declaration of manufacturer
PL QUALIFIED	
Test facility	-
Certificate/test no.	-
Inspection basis	-
Valid for	Extra codes 658/659 in conjunction with declaration of manufacturer

Standardized versions

Basic type	Design type		D in mm	L2 in mm	EL in mm	Thread in inches
902820/10	Form 2G according to DIN 43772	Form B1 according to DIN 43765	9	-	160	G 1/2
		Form B2 according to DIN 43765	9	-	250	G 1/2
		Form B3 according to DIN 43765	9	-	400	G 1/2
		Form C1 according to DIN 43766	11	-	160	G 1
		Form C2 according to DIN 43766	11	-	250	G 1
902820/11	Form 3G according to DIN 43772	Form G1 according to DIN 43771	9	-	160	G 1
		Form G2 according to DIN 43771	9	-	220	G 1
		Form G3 according to DIN 43771	9	-	280	G 1
902820/50	Form 4 according to DIN 43772	Form D1 according to DIN 43771	12.5	140	65	-
		Form D2 according to DIN 43771	12.5	200	125	-
		Form D3 according to DIN 43771	12.5	200	65	-
		Form D4 according to DIN 43771	12.5	260	125	-

Note: DIN 43772 contains information for evaluating the mechanical and thermal resistance of cylindrical and conical protection tubes in industrial thermometers.

JUMO GmbH & Co. KG
Delivery address: Mackenrodtstraße 14
36039 Fulda, Germany
Postal address: 36035 Fulda, Germany
Phone: +49 661 6003-0
Fax: +49 661 6003-607
Email: mail@jumo.net
Internet: www.jumo.net

JUMO UK LTD
JUMO House
Temple Bank, Riverway
Harlow, Essex, CM20 2DY, UK
Phone: +44 1279 63 55 33
Fax: +44 1279 62 50 29
Email: sales@jumo.co.uk
Internet: www.jumo.co.uk

JUMO Process Control, Inc.
6724 Joy Road
East Syracuse, NY 13057, USA
Phone: +1 315 437 5866
Fax: +1 315 437 5860
Email: info.us@jumo.net
Internet: www.jumousa.com

Dimensions

Device

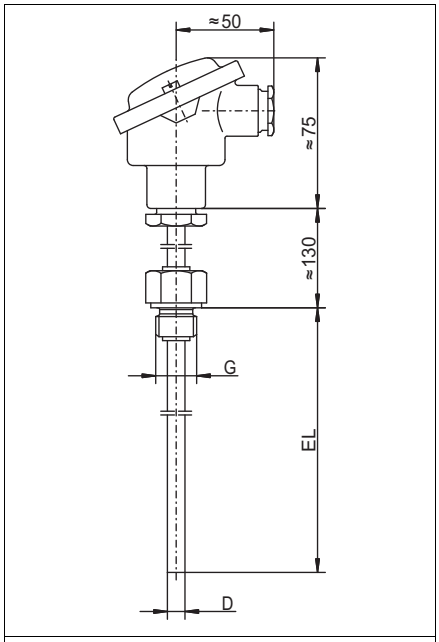

Basic type 902820/10

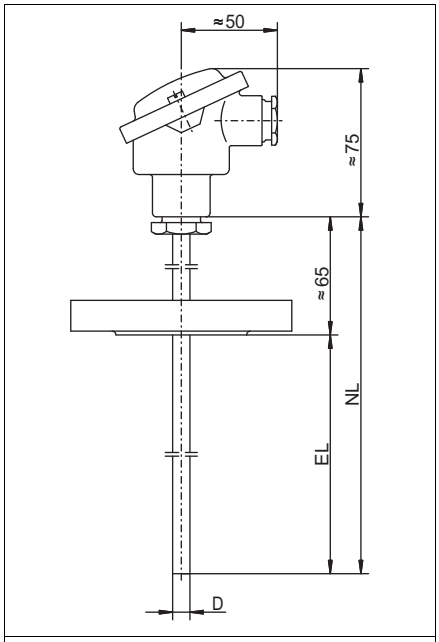

Basic type 902820/20

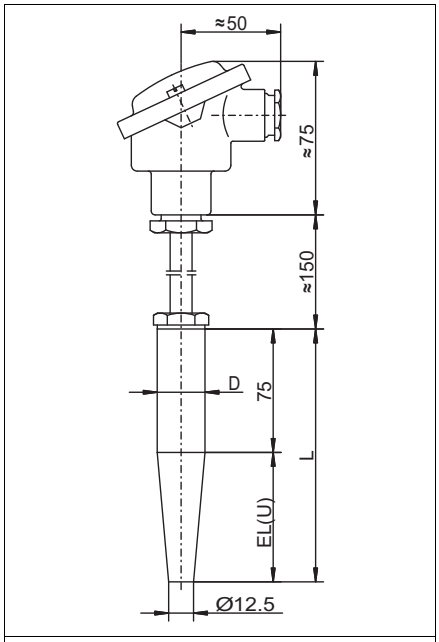

Basic type 902820/50

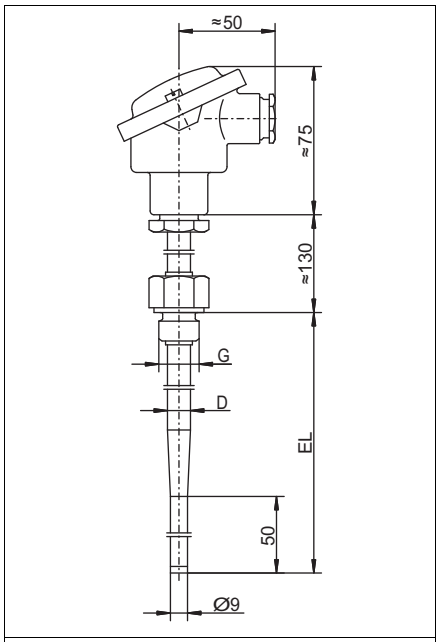

Basic type 902820/11

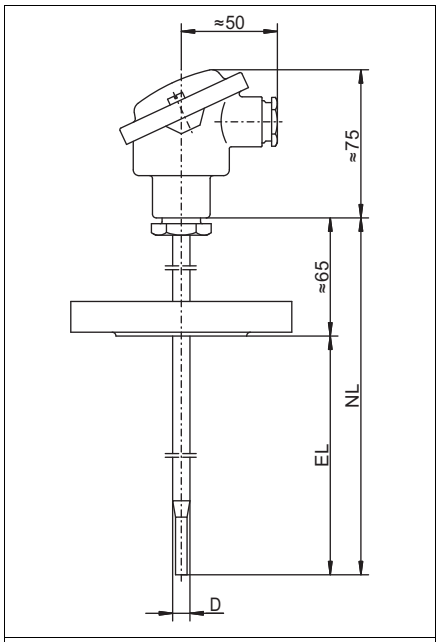

Basic type 902820/21

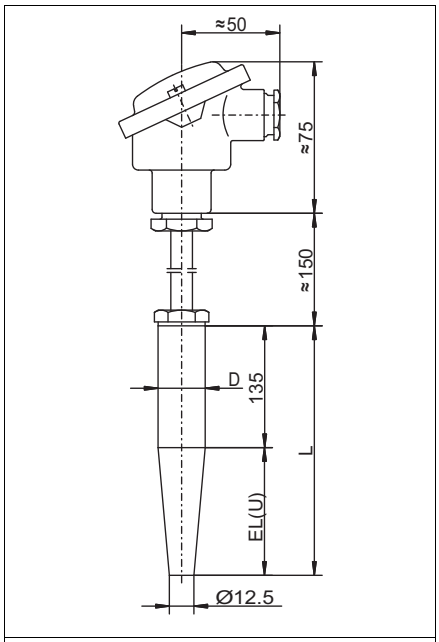

Basic type 902820/51

JUMO GmbH & Co. KG
Delivery address: Mackenrodtstraße 14
36039 Fulda, Germany
Postal address: 36035 Fulda, Germany
Phone: +49 661 6003-0
Fax: +49 661 6003-607
Email: mail@jumo.net
Internet: www.jumo.net

JUMO UK LTD
JUMO House
Temple Bank, Riverway
Harlow, Essex, CM20 2DY, UK
Phone: +44 1279 63 55 33
Fax: +44 1279 62 50 29
Email: sales@jumo.co.uk
Internet: www.jumo.co.uk

JUMO Process Control, Inc.
6724 Joy Road
East Syracuse, NY 13057, USA
Phone: +1 315 437 5866
Fax: +1 315 437 5860
Email: info.us@jumo.net
Internet: www.jumousa.com

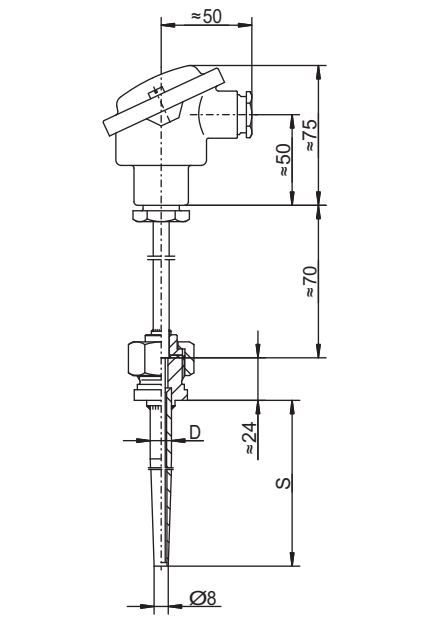

Basic type 902820/53

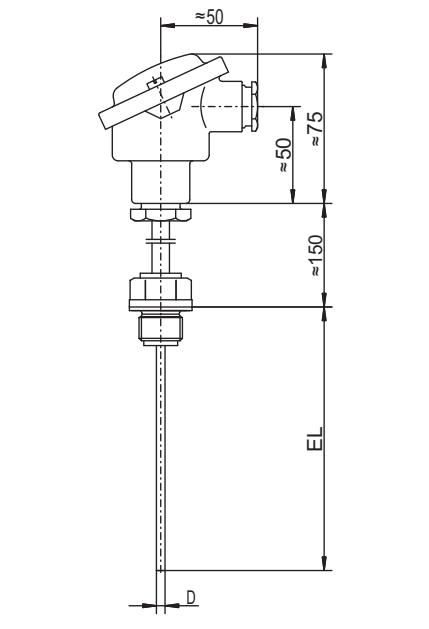

Basic type 902820/60

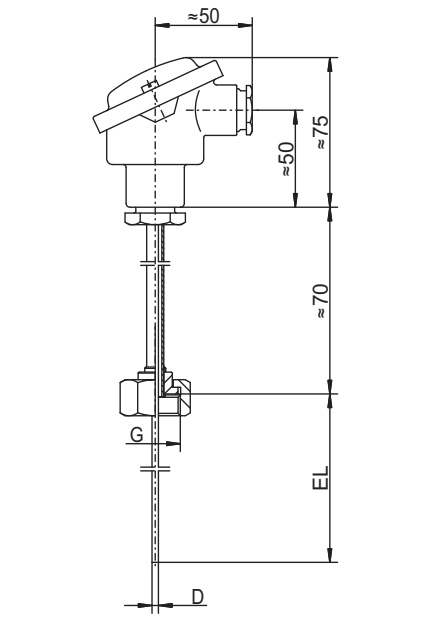

Basic type 902820/62

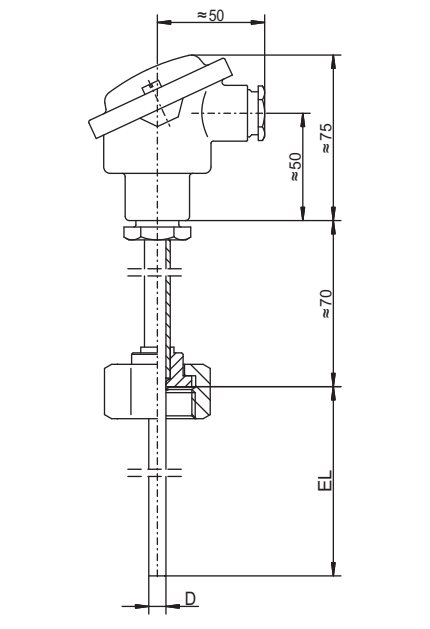

Basic type 902820/63

Insofar as the design type allows it, yellow terminal heads are used for SIL and PL applications (extra codes 658 or 659). Exceptions to this are probes for use in alkaline environments and probes where it is strictly necessary that they are PWIS-free.

JUMO GmbH & Co. KG
Delivery address: Mackenrodtstraße 14
36039 Fulda, Germany
Postal address: 36035 Fulda, Germany
Phone: +49 661 6003-0
Fax: +49 661 6003-607
Email: mail@jumo.net
Internet: www.jumo.net

JUMO UK LTD
JUMO House
Temple Bank, Riverway
Harlow, Essex, CM20 2DY, UK
Phone: +44 1279 63 55 33
Fax: +44 1279 62 50 29
Email: sales@jumo.co.uk
Internet: www.jumo.co.uk

JUMO Process Control, Inc.
6724 Joy Road
East Syracuse, NY 13057, USA
Phone: +1 315 437 5866
Fax: +1 315 437 5860
Email: info.us@jumo.net
Internet: www.jumousa.com

Terminal head

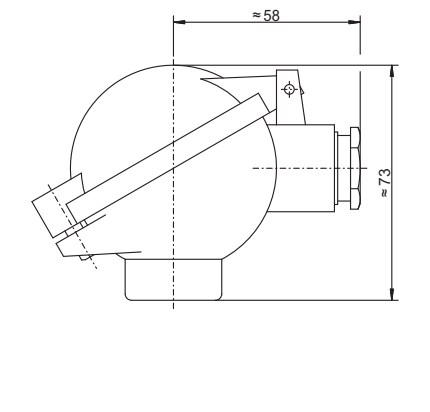

Terminal head form BUZ
Extra code 320

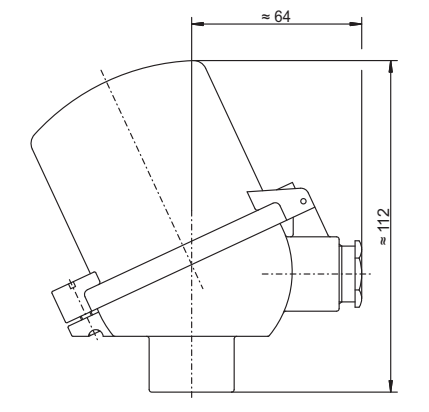

Terminal head form BUZH
Extra code 321
With LED display
Ex ia extra code 321 and 661

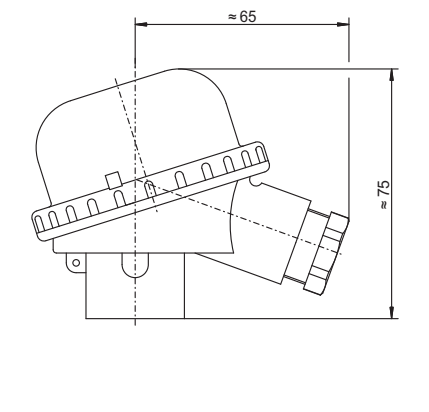

Terminal head form BBKS
Extra code 324

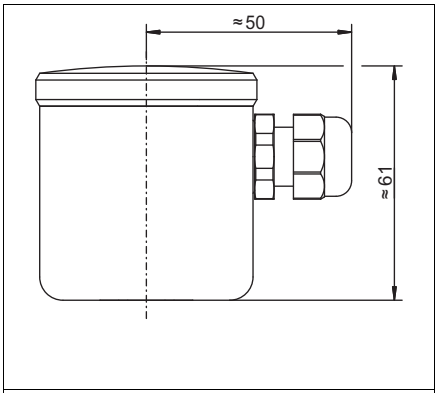

Terminal head form KGI-1
Extra code 326

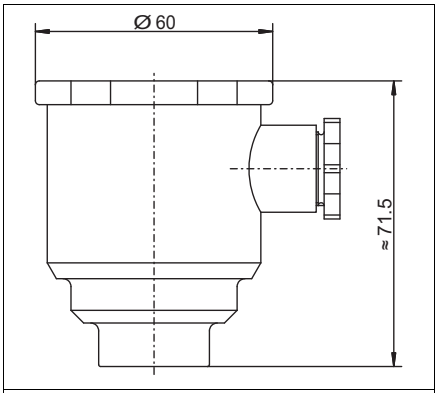

Terminal head form BEGF
Extra code 397

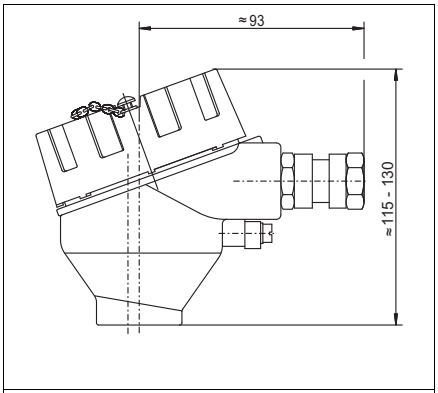

Terminal head form XD-A
Extra code 399
With LED display
Ex ia extra code 399 and 661
Ex ib extra code 399 and 789

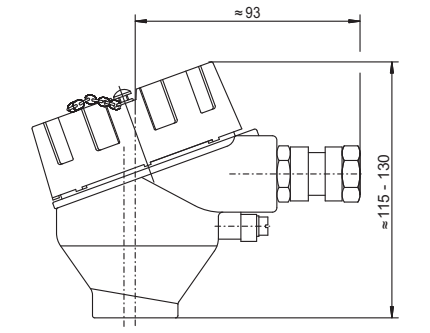

Terminal head form XD-S
Extra code 541
With LED display
Ex ia extra code 541 and 661
Ex ib extra code 541 and 789

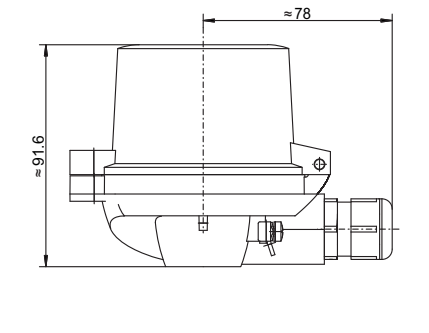

Terminal head form AB7
Extra code 924

JUMO GmbH & Co. KG
Delivery address: Mackenrodtstraße 14
36039 Fulda, Germany
Postal address: 36035 Fulda, Germany
Phone: +49 661 6003-0
Fax: +49 661 6003-607
Email: mail@jumo.net
Internet: www.jumo.net

JUMO UK LTD
JUMO House
Temple Bank, Riverway
Harlow, Essex, CM20 2DY, UK
Phone: +44 1279 63 55 33
Fax: +44 1279 62 50 29
Email: sales@jumo.co.uk
Internet: www.jumo.co.uk

JUMO Process Control, Inc.
6724 Joy Road
East Syracuse, NY 13057, USA
Phone: +1 315 437 5866
Fax: +1 315 437 5860
Email: info.us@jumo.net
Internet: www.jumousa.com

Wtrans B – head transmitter with wireless data transmission

The Wtrans B head transmitter with wireless data transmission (data sheet 707060) is used in conjunction with a Wtrans receiver (data sheet 902931) for stationary or mobile acquisition of temperatures with RTD temperature probes or thermocouples.

The measured values are transmitted wirelessly to the receiver of the Wtrans measuring system. The measured values are displayed on the receiver and are available in digital format on the RS485 interface and as analog outputs. Alternatively, different alarms can be signaled with two relay outputs.

This head transmitter, designed for industrial applications, comprises a transmitter with integrated transmission unit and an antenna-battery housing. The transmitter is designed for mounting in form B terminal heads and works in an ambient temperature range of -30 to +85 °C.

The radio frequency of the Wtrans measuring system is 868.4 MHz. This frequency is largely impervious to external interference and allows data to be transmitted even in harsh industrial environments. When using the antenna holder for wall mounting with the 3 m antenna cable for the receiver, the open air range is 300 m.

A 3.6 V, 2.2 Ah (size AA) lithium battery is used for the head transmitter voltage supply.

A setup program is available as an accessory for easy configuration and parameterization of the head transmitter and the Wtrans receiver on a PC. The OnlineChart function can be used optionally to record the measured values on a PC.

JUMO GmbH & Co. KG
Delivery address: Mackenrodtstraße 14
36039 Fulda, Germany
Postal address: 36035 Fulda, Germany
Phone: +49 661 6003-0
Fax: +49 661 6003-607
Email: mail@jumo.net
Internet: www.jumo.net

JUMO UK LTD
JUMO House
Temple Bank, Riverway
Harlow, Essex, CM20 2DY, UK
Phone: +44 1279 63 55 33
Fax: +44 1279 62 50 29
Email: sales@jumo.co.uk
Internet: www.jumo.co.uk

JUMO Process Control, Inc.
6724 Joy Road
East Syracuse, NY 13057, USA
Phone: +1 315 437 5866
Fax: +1 315 437 5860
Email: info.us@jumo.net
Internet: www.jumousa.com

Order details

		(1)	**Basic type**
	902820/10		Screw-in RTD temperature probe with continuous protection tube 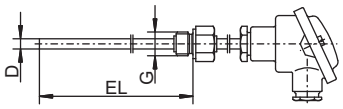
		(2)	**Operating temperature (additional versions upon request)**
x	150		-200 to +600 °C (wire-wound temperature sensor)
x	386		-50 to +260 °C (thin film temperature sensor)
x	402		-50 to +400 °C (thin film temperature sensor)
x	415		-50 to +600 °C (thin film temperature sensor)
		(3)	**Measuring insert (additional versions upon request)**
x	1001		1× Pt100 in 3-wire circuit
x	1003		1× Pt100 in 2-wire circuit
x	1011		1× Pt100 in 4-wire circuit
x	2001		2× Pt100 in 3-wire circuit
x	2003		2× Pt100 in 2-wire circuit
x	2011		2× Pt100 in four-wire circuit (only in conjunction with terminal head 321)
		(4)	**Tolerance class according to DIN EN 60751:2009 / IEC 60751:2008 (additional versions upon request)**
x	1		Class B (standard) (-50 to +500 °C)
x	2		Class A (-30 to +300 °C)
x	3		Class AA (0 to 150 °C)
		(5)	**Protection tube diameter D in mm (additional versions upon request)**
x	9		Ø 9 × 1 mm
x	11		Ø 11 × 2 mm
		(6)	**Insertion length EL in mm (EL up to 1000 mm)**
	...		Specification in plain text
		(7)	**Process connection (additional versions upon request)**
x	104		Screw connection G 1/2
x	106		Screw connection G 1
x	144		Screw connection 1/2-14 NPT
x	146		Screw connection 1-11.5 NPT
		(8)	**Protection tube material**
x	26		Stainless steel 1.4571
x	60		Titanium, upon request
x	80		Tantalum, upon request
x	81		Inconel, upon request
x	82		HASTELLOY®, upon request
		(9)	**Extra codes**
x	000		None
x	658		SIL and PL compatible (only in conjunction with JUMO SIL-certified safety temperature limiters and monitors according to data sheet 701150, not in conjunction with extra codes 330, 331, 333, 334, 335, 337, 550, 551, 859, 866, and 867)
x	659		SIL and PL compatible (only in conjunction with dTRANS T06 temperature transmitter according to data sheet 707071, not in conjunction with extra codes 330, 331, 333, 334, 335, 337, 550, 551, 859, 866, and 867)
x	320		Terminal head form BUZ
x	321		Terminal head form BUZH
x	324		Terminal head form BBKS
x	326		Terminal head form KGI-1
x	547		Terminal head form BUZH with LED display
x	924		Terminal head form AB7 with LC plug-in display (only in conjunction with extra code 866 or 867)

JUMO GmbH & Co. KG
Delivery address: Mackenrodtstraße 14
36039 Fulda, Germany
Postal address: 36035 Fulda, Germany
Phone: +49 661 6003-0
Fax: +49 661 6003-607
Email: mail@jumo.net
Internet: www.jumo.net

JUMO UK LTD
JUMO House
Temple Bank, Riverway
Harlow, Essex, CM20 2DY, UK
Phone: +44 1279 63 55 33
Fax: +44 1279 62 50 29
Email: sales@jumo.co.uk
Internet: www.jumo.co.uk

JUMO Process Control, Inc.
6724 Joy Road
East Syracuse, NY 13057, USA
Phone: +1 315 437 5866
Fax: +1 315 437 5860
Email: info.us@jumo.net
Internet: www.jumousa.com

x	925	Terminal head form BUZH with LC plug-in display (only in conjunction with extra code 866 or 867)
x	424	Terminal head with M12 machine connector (can only be selected in the case of measuring inserts with max. 4 wires, e.g., 1003, 1011, or 2003)
x	330	1 analog transmitter (type 707031 according to data sheet 707030), output 4 to 20 mA, (only for measuring insert 1× Pt100 in two or three-wire circuit, not in conjunction with extra codes 658 or 659)
x	331	1 programmable transmitter (type 707014 according to data sheet 707010), output 4 to 20 mA/20 to 4 mA, (only for measuring insert 1× Pt100, not in conjunction with extra codes 658 or 659, suitable setup program part no. 00605080)
x	333	1 analog transmitter (type 707033 according to data sheet 707030), output 0 to 10 V, (only for measuring insert 1× Pt100 in two or three-wire circuit, not in conjunction with extra codes 658 or 659)
x	335	2 programmable transmitters (type 707014 according to data sheet 707010), output 4 to 20 mA/20 to 4 mA, (only for measuring insert 2× Pt100 and with extra code 321, not in conjunction with extra codes 658 or 659, suitable setup program part no. 00605080)
x	337	2 analog transmitters (type 707033 according to data sheet 707030), output 0 to 10 V, (only for measuring insert 2× Pt100 in two or three-wire circuit and with extra code 321, not in conjunction with extra codes 658 or 659)
x	550	1 programmable transmitter (type 707050 according to data sheet 707050), output 4 to 20 mA/20 to 4 mA (USB), (only for measuring insert 1× Pt100, not in conjunction with extra codes 658 or 659, suitable setup program part no. 00574959)
x	551	2 programmable transmitters (type 707050 according to data sheet 707050), output 4 to 20 mA/20 to 4 mA (USB), (only for measuring insert 2× Pt100 and with extra code 321, not in conjunction with extra codes 658 or 659, suitable setup program part no. 00574959)
x	859	1 programmable head transmitter Wtrans B with wireless data transmission (type 707060 according to data sheet 707060), (not in conjunction with extra codes 658 or 659, suitable setup program part no. 00488887)
x	866	1 programmable two-channel transmitter with HART® (type 707080 according to data sheet 707080), output 4 to 20 mA, (not in conjunction with extra codes 658 or 659, suitable software available for free – Device Type Manager (DTM) for PACTware)
x	867	1 programmable two-channel transmitter with HART®/SIL (type 707081 according to data sheet 707080), output 4 to 20 mA, (not in conjunction with extra codes 658 or 659, suitable software available for free – Device Type Manager (DTM) for PACTware)
x	562	Parts in contact with medium with PTFE covering, upon request
x	563	Parts in contact with medium with ECTFE (Halar®) coating, upon request
x	365	Inspection certificate 3.1 DIN EN 10204 insulation resistance
x	367	Inspection certificate 3.1 DIN EN 10204 pressure test
x	368	Inspection certificate 3.1 DIN EN 10204 leak test
x	374	Inspection certificate 3.1 DIN EN 10204 material

Note: For extra code transmitter please specify measuring range and, if applicable, output signal in plain text.

	(1)		(2)		(3)		(4)		(5)		(6)		(7)		(8)		(9)	
Order code		-		-		-		-		-		-		-		/		, ...[a]
Order example	902820/10	-	402	-	1001	-	1	-	9	-	250	-	104	-	26	/	000	

[a] List extra codes in sequence and separate using commas.

JUMO GmbH & Co. KG
Delivery address: Mackenrodtstraße 14
36039 Fulda, Germany
Postal address: 36035 Fulda, Germany
Phone: +49 661 6003-0
Fax: +49 661 6003-607
Email: mail@jumo.net
Internet: www.jumo.net

JUMO UK LTD
JUMO House
Temple Bank, Riverway
Harlow, Essex, CM20 2DY, UK
Phone: +44 1279 63 55 33
Fax: +44 1279 62 50 29
Email: sales@jumo.co.uk
Internet: www.jumo.co.uk

JUMO Process Control, Inc.
6724 Joy Road
East Syracuse, NY 13057, USA
Phone: +1 315 437 5866
Fax: +1 315 437 5860
Email: info.us@jumo.net
Internet: www.jumousa.com

		(1)	**Basic type**
	902820/11		Screw-in RTD temperature probe with reduced protection tube 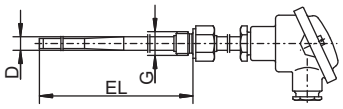
		(2)	**Operating temperature (additional versions upon request)**
x	150		-200 to +600 °C (wire-wound temperature sensor)
x	386		-50 to +260 °C (thin film temperature sensor)
x	402		-50 to +400 °C (thin film temperature sensor)
x	415		-50 to +600 °C (thin film temperature sensor)
		(3)	**Measuring insert (additional versions upon request)**
x	1001		1× Pt100 in 3-wire circuit
x	1003		1× Pt100 in 2-wire circuit
x	1011		1× Pt100 in 4-wire circuit
x	2001		2× Pt100 in 3-wire circuit
x	2003		2× Pt100 in 2-wire circuit
x	2011		2× Pt100 in four-wire circuit (only in conjunction with terminal head 321)
		(4)	**Tolerance class according to DIN EN 60751:2009 / IEC 60751:2008 (additional versions upon request)**
x	1		Class B (standard) (-50 to +500 °C)
x	2		Class A (-30 to +300 °C)
x	3		Class AA (0 to 150 °C)
		(5)	**Protection tube diameter D in mm (additional versions upon request)**
x	9		Ø 9 × 1 mm reduced to Ø 6 mm
x	12		Ø 12 × 2.5 mm reduced to Ø 9 mm
		(6)	**Insertion length EL in mm (EL up to 700 mm)**
	...		Specification in plain text
		(7)	**Process connection (additional versions upon request)**
x	104		Screw connection G 1/2
x	106		Screw connection G 1
x	144		Screw connection 1/2-14 NPT
x	146		Screw connection 1-11.5 NPT
		(8)	**Protection tube material**
x	26		Stainless steel 1.4571
x	60		Titanium, upon request
x	80		Tantalum, upon request
x	81		Inconel, upon request
x	82		HASTELLOY®, upon request
		(9)	**Extra codes**
x	000		None
x	658		SIL and PL compatible (only in conjunction with JUMO SIL-certified safety temperature limiters and monitors according to data sheet 701150, not in conjunction with extra codes 330, 331, 333, 334, 335, 337, 550, 551, 859, 866, and 867)
x	659		SIL and PL compatible (only in conjunction with dTRANS T06 temperature transmitter according to data sheet 707071, not in conjunction with extra codes 330, 331, 333, 334, 335, 337, 550, 551, 859, 866, and 867)
x	320		Terminal head form BUZ
x	321		Terminal head form BUZH
x	324		Terminal head form BBKS
x	326		Terminal head form KGI-1
x	547		Terminal head form BUZH with LED display
x	924		Terminal head form AB7 with LC plug-in display (only in conjunction with extra code 866 or 867)
x	925		Terminal head form BUZH with LC plug-in display (only in conjunction with extra code 866 or 867)

JUMO GmbH & Co. KG
Delivery address: Mackenrodtstraße 14
36039 Fulda, Germany
Postal address: 36035 Fulda, Germany
Phone: +49 661 6003-0
Fax: +49 661 6003-607
Email: mail@jumo.net
Internet: www.jumo.net

JUMO UK LTD
JUMO House
Temple Bank, Riverway
Harlow, Essex, CM20 2DY, UK
Phone: +44 1279 63 55 33
Fax: +44 1279 62 50 29
Email: sales@jumo.co.uk
Internet: www.jumo.co.uk

JUMO Process Control, Inc.
6724 Joy Road
East Syracuse, NY 13057, USA
Phone: +1 315 437 5866
Fax: +1 315 437 5860
Email: info.us@jumo.net
Internet: www.jumousa.com

x	424	Terminal head with M12 machine connector (can only be selected in the case of measuring inserts with max. 4 wires, e.g., 1003, 1011, or 2003)
x	330	1 analog transmitter (type 707031 according to data sheet 707030), output 4 to 20 mA, (only for measuring insert 1× Pt100 in two or three-wire circuit, not in conjunction with extra codes 658 or 659)
x	331	1 programmable transmitter (type 707014 according to data sheet 707010), output 4 to 20 mA/20 to 4 mA, (only for measuring insert 1× Pt100, not in conjunction with extra codes 658 or 659, suitable setup program part no. 00605080)
x	333	1 analog transmitter (type 707033 according to data sheet 707030), output 0 to 10 V, (only for measuring insert 1× Pt100 in two or three-wire circuit, not in conjunction with extra codes 658 or 659)
x	335	2 programmable transmitters (type 707014 according to data sheet 707010), output 4 to 20 mA/20 to 4 mA, (only for measuring insert 2× Pt100 and with extra code 321, not in conjunction with extra codes 658 or 659, suitable setup program part no. 00605080)
x	337	2 analog transmitters (type 707033 according to data sheet 707030), output 0 to 10 V, (only for measuring insert 2× Pt100 in two or three-wire circuit and with extra code 321, not in conjunction with extra codes 658 or 659)
x	550	1 programmable transmitter (type 707050 according to data sheet 707050), output 4 to 20 mA/20 to 4 mA (USB), (only for measuring insert 1× Pt100, not in conjunction with extra codes 658 or 659, suitable setup program part no. 00574959)
x	551	2 programmable transmitters (type 707050 according to data sheet 707050), output 4 to 20 mA/20 to 4 mA (USB), (only for measuring insert 2× Pt100 and with extra code 321, not in conjunction with extra codes 658 or 659, suitable setup program part no. 00574959)
x	859	1 programmable head transmitter Wtrans B with wireless data transmission (type 707060 according to data sheet 707060), (not in conjunction with extra codes 658 or 659, suitable setup program part no. 00488887)
x	866	1 programmable two-channel transmitter with HART® (type 707080 according to data sheet 707080), output 4 to 20 mA, (not in conjunction with extra codes 658 or 659, suitable software available for free – Device Type Manager (DTM) for PACTware)
x	867	1 programmable two-channel transmitter with HART®/SIL (type 707081 according to data sheet 707080), output 4 to 20 mA, (not in conjunction with extra codes 658 or 659, suitable software available for free – Device Type Manager (DTM) for PACTware)
x	562	Parts in contact with medium with PTFE covering, upon request
x	563	Parts in contact with medium with ECTFE (Halar®) coating, upon request
x	365	Inspection certificate 3.1 DIN EN 10204 insulation resistance
x	367	Inspection certificate 3.1 DIN EN 10204 pressure test
x	368	Inspection certificate 3.1 DIN EN 10204 leak test
x	374	Inspection certificate 3.1 DIN EN 10204 material

Note: For extra code transmitter please specify measuring range and, if applicable, output signal in plain text.

	(1)		(2)		(3)		(4)		(5)		(6)		(7)		(8)		(9)	
Order code		-		-		-		-		-		-		-		/		, ...[a]
Order example	902820/11	-	402	-	1001	-	1	-	12	-	250	-	104	-	26	/	000	

[a] List extra codes in sequence and separate using commas.

JUMO GmbH & Co. KG
Delivery address: Mackenrodtstraße 14
36039 Fulda, Germany
Postal address: 36035 Fulda, Germany
Phone: +49 661 6003-0
Fax: +49 661 6003-607
Email: mail@jumo.net
Internet: www.jumo.net

JUMO UK LTD
JUMO House
Temple Bank, Riverway
Harlow, Essex, CM20 2DY, UK
Phone: +44 1279 63 55 33
Fax: +44 1279 62 50 29
Email: sales@jumo.co.uk
Internet: www.jumo.co.uk

JUMO Process Control, Inc.
6724 Joy Road
East Syracuse, NY 13057, USA
Phone: +1 315 437 5866
Fax: +1 315 437 5860
Email: info.us@jumo.net
Internet: www.jumousa.com

		(1)	**Basic type**
	902820/20		Push-in RTD temperature probe with continuous protection tube 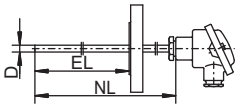
		(2)	**Operating temperature (additional versions upon request)**
x	150		-200 to +600 °C (wire-wound temperature sensor)
x	386		-50 to +260 °C (thin film temperature sensor)
x	402		-50 to +400 °C (thin film temperature sensor)
x	415		-50 to +600 °C (thin film temperature sensor)
		(3)	**Measuring insert (additional versions upon request)**
x	1001		1× Pt100 in 3-wire circuit
x	1003		1× Pt100 in 2-wire circuit
x	1011		1× Pt100 in 4-wire circuit
x	2001		2× Pt100 in 3-wire circuit
x	2003		2× Pt100 in 2-wire circuit
x	2011		2× Pt100 in four-wire circuit (only in conjunction with terminal head 321)
		(4)	**Tolerance class according to DIN EN 60751:2009 / IEC 60751:2008 (additional versions upon request)**
x	1		Class B (standard) (-50 to +500 °C)
x	2		Class A (-30 to +300 °C)
x	3		Class AA (0 to 150 °C)
		(5)	**Protection tube diameter D in mm (additional versions upon request)**
x	9		Ø 9 × 1 mm
x	11		Ø 11 × 2 mm
		(6)	**Insertion length EL in mm (EL up to 1000 mm)**
	...		Specification in plain text
		(7)	**Process connection (additional versions upon request)**
x	000		None
x	642		Flange B DN 25/PN 40, DIN EN 1092-1
x	644		Flange B DN 40/PN 40, DIN EN 1092-1
		(8)	**Protection tube material**
x	26		Stainless steel 1.4571
x	60		Titanium, upon request
x	80		Tantalum, upon request
x	81		Inconel, upon request
x	82		HASTELLOY®, upon request
		(9)	**Extra codes**
x	000		None
x	658		SIL and PL compatible (only in conjunction with JUMO SIL-certified safety temperature limiters and monitors according to data sheet 701150, not in conjunction with extra codes 330, 331, 333, 334, 335, 337, 550, 551, 859, 866, and 867)
x	659		SIL and PL compatible (only in conjunction with dTRANS T06 temperature transmitter according to data sheet 707071, not in conjunction with extra codes 330, 331, 333, 334, 335, 337, 550, 551, 859, 866, and 867)
x	320		Terminal head form BUZ
x	321		Terminal head form BUZH
x	324		Terminal head form BBKS
x	326		Terminal head form KGI-1
x	547		Terminal head form BUZH with LED display
x	924		Terminal head form AB7 with LC plug-in display (only in conjunction with extra code 866 or 867)
x	925		Terminal head form BUZH with LC plug-in display (only in conjunction with extra code 866 or 867)
x	424		Terminal head with M12 machine connector (can only be selected in the case of measuring inserts with max. 4 wires, e.g., 1003, 1011, or 2003)

JUMO GmbH & Co. KG
Delivery address: Mackenrodtstraße 14
36039 Fulda, Germany
Postal address: 36035 Fulda, Germany
Phone: +49 661 6003-0
Fax: +49 661 6003-607
Email: mail@jumo.net
Internet: www.jumo.net

JUMO UK LTD
JUMO House
Temple Bank, Riverway
Harlow, Essex, CM20 2DY, UK
Phone: +44 1279 63 55 33
Fax: +44 1279 62 50 29
Email: sales@jumo.co.uk
Internet: www.jumo.co.uk

JUMO Process Control, Inc.
6724 Joy Road
East Syracuse, NY 13057, USA
Phone: +1 315 437 5866
Fax: +1 315 437 5860
Email: info.us@jumo.net
Internet: www.jumousa.com

x	330	1 analog transmitter (type 707031 according to data sheet 707030), output 4 to 20 mA, (only for measuring insert 1× Pt100 in two or three-wire circuit, not in conjunction with extra codes 658 or 659)
x	331	1 programmable transmitter (type 707014 according to data sheet 707010), output 4 to 20 mA/20 to 4 mA, (only for measuring insert 1× Pt100, not in conjunction with extra codes 658 or 659, suitable setup program part no. 00605080)
x	333	1 analog transmitter (type 707033 according to data sheet 707030), output 0 to 10 V, (only for measuring insert 1× Pt100 in two or three-wire circuit, not in conjunction with extra codes 658 or 659)
x	335	2 programmable transmitters (type 707014 according to data sheet 707010), output 4 to 20 mA/20 to 4 mA, (only for measuring insert 2× Pt100 and with extra code 321, not in conjunction with extra codes 658 or 659, suitable setup program part no. 00605080)
x	337	2 analog transmitters (type 707033 according to data sheet 707030), output 0 to 10 V, (only for measuring insert 2× Pt100 in two or three-wire circuit and with extra code 321, not in conjunction with extra codes 658 or 659)
x	550	1 programmable transmitter (type 707050 according to data sheet 707050), output 4 to 20 mA/20 to 4 mA (USB), (only for measuring insert 1× Pt100, not in conjunction with extra codes 658 or 659, suitable setup program part no. 00574959)
x	551	2 programmable transmitters (type 707050 according to data sheet 707050), output 4 to 20 mA/20 to 4 mA (USB), (only for measuring insert 2× Pt100 and with extra code 321, not in conjunction with extra codes 658 or 659, suitable setup program part no. 00574959)
x	859	1 programmable head transmitter Wtrans B with wireless data transmission (type 707060 according to data sheet 707060), (not in conjunction with extra codes 658 or 659, suitable setup program part no. 00488887)
x	866	1 programmable two-channel transmitter with HART® (type 707080 according to data sheet 707080), output 4 to 20 mA, (not in conjunction with extra codes 658 or 659, suitable software available for free – Device Type Manager (DTM) for PACTware)
x	867	1 programmable two-channel transmitter with HART®/SIL (type 707081 according to data sheet 707080), output 4 to 20 mA, (not in conjunction with extra codes 658 or 659, suitable software available for free – Device Type Manager (DTM) for PACTware)
x	562	Parts in contact with medium with PTFE covering, upon request
x	563	Parts in contact with medium with ECTFE (Halar®) coating, upon request
x	365	Inspection certificate 3.1 DIN EN 10204 insulation resistance
x	367	Inspection certificate 3.1 DIN EN 10204 pressure test
x	368	Inspection certificate 3.1 DIN EN 10204 leak test
x	374	Inspection certificate 3.1 DIN EN 10204 material

Note: For extra code transmitter please specify measuring range and, if applicable, output signal in plain text.

	(1)		(2)		(3)		(4)		(5)		(6)		(7)		(8)		(9)	
Order code	[ ]	-	[ ]	-	[ ]	-	[ ]	-	[ ]	-	[ ]	-	[ ]	-	[ ]	/	[ ]	, ...[a]
Order example	902820/20	-	402	-	1001	-	1	-	9	-	250	-	642	-	26	/	000	

[a] List extra codes in sequence and separate using commas.

JUMO GmbH & Co. KG
Delivery address: Mackenrodtstraße 14
36039 Fulda, Germany
Postal address: 36035 Fulda, Germany
Phone: +49 661 6003-0
Fax: +49 661 6003-607
Email: mail@jumo.net
Internet: www.jumo.net

JUMO UK LTD
JUMO House
Temple Bank, Riverway
Harlow, Essex, CM20 2DY, UK
Phone: +44 1279 63 55 33
Fax: +44 1279 62 50 29
Email: sales@jumo.co.uk
Internet: www.jumo.co.uk

JUMO Process Control, Inc.
6724 Joy Road
East Syracuse, NY 13057, USA
Phone: +1 315 437 5866
Fax: +1 315 437 5860
Email: info.us@jumo.net
Internet: www.jumousa.com

		(1)	**Basic type**
	902820/21		Push-in RTD temperature probe with reduced protection tube 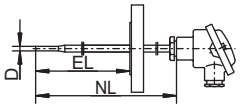
		(2)	**Operating temperature (additional versions upon request)**
x	150		-200 to +600 °C (wire-wound temperature sensor)
x	386		-50 to +260 °C (thin film temperature sensor)
x	402		-50 to +400 °C (thin film temperature sensor)
x	415		-50 to +600 °C (thin film temperature sensor)
		(3)	**Measuring insert (additional versions upon request)**
x	1001		1× Pt100 in 3-wire circuit
x	1003		1× Pt100 in 2-wire circuit
x	1011		1× Pt100 in 4-wire circuit
x	2001		2× Pt100 in 3-wire circuit
x	2003		2× Pt100 in 2-wire circuit
x	2011		2× Pt100 in four-wire circuit (only in conjunction with terminal head 321)
		(4)	**Tolerance class according to DIN EN 60751:2009 / IEC 60751:2008 (additional versions upon request)**
x	1		Class B (standard) (-50 to +500 °C)
x	2		Class A (-30 to +300 °C)
x	3		Class AA (0 to 150 °C)
		(5)	**Protection tube diameter D in mm (additional versions upon request)**
x	9		Ø 9 × 1 mm reduced to Ø 6 mm
x	12		Ø 12 × 2.5 mm reduced to Ø 9 mm
		(6)	**Insertion length EL in mm (EL up to 1000 mm)**
	...		Specification in plain text
		(7)	**Process connection (additional versions upon request)**
x	000		None
x	642		Flange B DN 25/PN 40, DIN EN 1092-1
x	644		Flange B DN 40/PN 40, DIN EN 1092-1
		(8)	**Protection tube material**
x	26		Stainless steel 1.4571
x	60		Titanium, upon request
x	80		Tantalum, upon request
x	81		Inconel, upon request
x	82		HASTELLOY®, upon request
		(9)	**Extra codes**
x	000		None
x	658		SIL and PL compatible (only in conjunction with JUMO SIL-certified safety temperature limiters and monitors according to data sheet 701150, not in conjunction with extra codes 330, 331, 333, 334, 335, 337, 550, 551, 859, 866, and 867)
x	659		SIL and PL compatible (only in conjunction with dTRANS T06 temperature transmitter according to data sheet 707071, not in conjunction with extra codes 330, 331, 333, 334, 335, 337, 550, 551, 859, 866, and 867)
x	320		Terminal head form BUZ
x	321		Terminal head form BUZH
x	324		Terminal head form BBKS
x	326		Terminal head form KGI-1
x	547		Terminal head form BUZH with LED display
x	924		Terminal head form AB7 with LC plug-in display (only in conjunction with extra code 866 or 867)
x	925		Terminal head form BUZH with LC plug-in display (only in conjunction with extra code 866 or 867)
x	424		Terminal head with M12 machine connector (can only be selected in the case of measuring inserts with max. 4 wires, e.g., 1003, 1011, or 2003)

JUMO GmbH & Co. KG
Delivery address: Mackenrodtstraße 14
36039 Fulda, Germany
Postal address: 36035 Fulda, Germany
Phone: +49 661 6003-0
Fax: +49 661 6003-607
Email: mail@jumo.net
Internet: www.jumo.net

JUMO UK LTD
JUMO House
Temple Bank, Riverway
Harlow, Essex, CM20 2DY, UK
Phone: +44 1279 63 55 33
Fax: +44 1279 62 50 29
Email: sales@jumo.co.uk
Internet: www.jumo.co.uk

JUMO Process Control, Inc.
6724 Joy Road
East Syracuse, NY 13057, USA
Phone: +1 315 437 5866
Fax: +1 315 437 5860
Email: info.us@jumo.net
Internet: www.jumousa.com

x	330	1 analog transmitter (type 707031 according to data sheet 707030), output 4 to 20 mA, (only for measuring insert 1× Pt100 in two or three-wire circuit, not in conjunction with extra codes 658 or 659)
x	331	1 programmable transmitter (type 707014 according to data sheet 707010), output 4 to 20 mA/20 to 4 mA, (only for measuring insert 1× Pt100, not in conjunction with extra codes 658 or 659, suitable setup program part no. 00605080)
x	333	1 analog transmitter (type 707033 according to data sheet 707030), output 0 to 10 V, (only for measuring insert 1× Pt100 in two or three-wire circuit, not in conjunction with extra codes 658 or 659)
x	335	2 programmable transmitters (type 707014 according to data sheet 707010), output 4 to 20 mA/20 to 4 mA, (only for measuring insert 2× Pt100 and with extra code 321, not in conjunction with extra codes 658 or 659, suitable setup program part no. 00605080)
x	337	2 analog transmitters (type 707033 according to data sheet 707030), output 0 to 10 V, (only for measuring insert 2× Pt100 in two or three-wire circuit and with extra code 321, not in conjunction with extra codes 658 or 659)
x	550	1 programmable transmitter (type 707050 according to data sheet 707050), output 4 to 20 mA/20 to 4 mA (USB), (only for measuring insert 1× Pt100, not in conjunction with extra codes 658 or 659, suitable setup program part no. 00574959)
x	551	2 programmable transmitters (type 707050 according to data sheet 707050), output 4 to 20 mA/20 to 4 mA (USB), (only for measuring insert 2× Pt100 and with extra code 321, not in conjunction with extra codes 658 or 659, suitable setup program part no. 00574959)
x	859	1 programmable head transmitter Wtrans B with wireless data transmission (type 707060 according to data sheet 707060), (not in conjunction with extra codes 658 or 659, suitable setup program part no. 00488887)
x	866	1 programmable two-channel transmitter with HART® (type 707080 according to data sheet 707080), output 4 to 20 mA, (not in conjunction with extra codes 658 or 659, suitable software available for free – Device Type Manager (DTM) for PACTware)
x	867	1 programmable two-channel transmitter with HART®/SIL (type 707081 according to data sheet 707080), output 4 to 20 mA, (not in conjunction with extra codes 658 or 659, suitable software available for free – Device Type Manager (DTM) for PACTware)
x	562	Parts in contact with medium with PTFE covering, upon request
x	563	Parts in contact with medium with ECTFE (Halar®) coating, upon request
x	365	Inspection certificate 3.1 DIN EN 10204 insulation resistance
x	367	Inspection certificate 3.1 DIN EN 10204 pressure test
x	368	Inspection certificate 3.1 DIN EN 10204 leak test
x	374	Inspection certificate 3.1 DIN EN 10204 material

Note: For extra code transmitter please specify measuring range and, if applicable, output signal in plain text.

	(1)		(2)		(3)		(4)		(5)		(6)		(7)		(8)		(9)	
Order code	[ ]	-	[ ]	-	[ ]	-	[ ]	-	[ ]	-	[ ]	-	[ ]	-	[ ]	/	[ ]	, ...[a]
Order example	902820/21	-	402	-	1001	-	1	-	12	-	250	-	642	-	26	/	000	

[a] List extra codes in sequence and separate using commas.

JUMO GmbH & Co. KG
Delivery address: Mackenrodtstraße 14
36039 Fulda, Germany
Postal address: 36035 Fulda, Germany
Phone: +49 661 6003-0
Fax: +49 661 6003-607
Email: mail@jumo.net
Internet: www.jumo.net

JUMO UK LTD
JUMO House
Temple Bank, Riverway
Harlow, Essex, CM20 2DY, UK
Phone: +44 1279 63 55 33
Fax: +44 1279 62 50 29
Email: sales@jumo.co.uk
Internet: www.jumo.co.uk

JUMO Process Control, Inc.
6724 Joy Road
East Syracuse, NY 13057, USA
Phone: +1 315 437 5866
Fax: +1 315 437 5860
Email: info.us@jumo.net
Internet: www.jumousa.com

		(1)	**Basic type**
	902820/50		Screw-in RTD temperature probe with thermowell DIN 43772, form 4 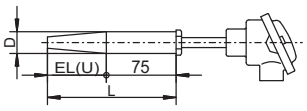
		(2)	**Operating temperature (additional versions upon request)**
x	150		-200 to +600 °C (wire-wound temperature sensor)
x	386		-50 to +260 °C (thin film temperature sensor)
x	402		-50 to +400 °C (thin film temperature sensor)
x	415		-50 to +600 °C (thin film temperature sensor)
		(3)	**Measuring insert (additional versions upon request)**
x	1001		1× Pt100 in 3-wire circuit
x	1003		1× Pt100 in 2-wire circuit
x	1011		1× Pt100 in 4-wire circuit
x	2001		2× Pt100 in 3-wire circuit
x	2003		2× Pt100 in 2-wire circuit
x	2011		2× Pt100 in four-wire circuit (only in conjunction with terminal head 321)
		(4)	**Tolerance class according to DIN EN 60751:2009 / IEC 60751:2008 (additional versions upon request)**
x	1		Class B (standard) (-50 to +500 °C)
x	2		Class A (-30 to +300 °C)
x	3		Class AA (0 to 150 °C)
		(5)	**Protection tube diameter D in mm (additional versions upon request)**
x	24		Ø 24 mm reduced to Ø 12.5 mm
		(6)	**Thermowell dimensions (insertion length/total length)**
x	65		65 mm/140 mm (previously form D1 according to DIN 43767)
x	125		125 mm/200 mm (previously form D2 according to DIN 43767)
	...		Upon request (Code: U + L)
		(7)	**Thermowell material**
x	26		Stainless steel 1.4571 (operating temperature 600 °C)
x	36		Steel 1.7335 (operating temperature 540 °C)
		(8)	**Protection tube material**
x	26		Stainless steel 1.4571
		(9)	**Extra codes**
x	000		None
x	658		SIL and PL compatible (only in conjunction with JUMO SIL-certified safety temperature limiters and monitors according to data sheet 701150, not in conjunction with extra codes 330, 331, 333, 334, 335, 337, 550, 551, 859, 866, and 867)
x	659		SIL and PL compatible (only in conjunction with dTRANS T06 temperature transmitter according to data sheet 707071, not in conjunction with extra codes 330, 331, 333, 334, 335, 337, 550, 551, 859, 866, and 867)
x	320		Terminal head form BUZ
x	321		Terminal head form BUZH
x	324		Terminal head form BBKS
x	326		Terminal head form KGI-1
x	547		Terminal head form BUZH with LED display
x	924		Terminal head form AB7 with LC plug-in display (only in conjunction with extra code 866 or 867)
x	925		Terminal head form BUZH with LC plug-in display (only in conjunction with extra code 866 or 867)
x	424		Terminal head with M12 machine connector (can only be selected in the case of measuring inserts with max. 4 wires, e.g., 1003, 1011, or 2003)
x	330		1 analog transmitter (type 707031 according to data sheet 707030), output 4 to 20 mA, (only for measuring insert 1× Pt100 in two or three-wire circuit, not in conjunction with extra codes 658 or 659)
x	331		1 programmable transmitter (type 707014 according to data sheet 707010), output 4 to 20 mA/20 to 4 mA, (only for measuring insert 1× Pt100, not in conjunction with extra codes 658 or 659, suitable setup program part no. 00605080)

JUMO GmbH & Co. KG
Delivery address: Mackenrodtstraße 14
36039 Fulda, Germany
Postal address: 36035 Fulda, Germany
Phone: +49 661 6003-0
Fax: +49 661 6003-607
Email: mail@jumo.net
Internet: www.jumo.net

JUMO UK LTD
JUMO House
Temple Bank, Riverway
Harlow, Essex, CM20 2DY, UK
Phone: +44 1279 63 55 33
Fax: +44 1279 62 50 29
Email: sales@jumo.co.uk
Internet: www.jumo.co.uk

JUMO Process Control, Inc.
6724 Joy Road
East Syracuse, NY 13057, USA
Phone: +1 315 437 5866
Fax: +1 315 437 5860
Email: info.us@jumo.net
Internet: www.jumousa.com

x	333	1 analog transmitter (type 707033 according to data sheet 707030), output 0 to 10 V, (only for measuring insert 1× Pt100 in two or three-wire circuit, not in conjunction with extra codes 658 or 659)
x	335	2 programmable transmitters (type 707014 according to data sheet 707010), output 4 to 20 mA/20 to 4 mA, (only for measuring insert 2× Pt100 and with extra code 321, not in conjunction with extra codes 658 or 659, suitable setup program part no. 00605080)
x	337	2 analog transmitters (type 707033 according to data sheet 707030), output 0 to 10 V, (only for measuring insert 2× Pt100 in two or three-wire circuit and with extra code 321, not in conjunction with extra codes 658 or 659)
x	550	1 programmable transmitter (type 707050 according to data sheet 707050), output 4 to 20 mA/20 to 4 mA (USB), (only for measuring insert 1× Pt100, not in conjunction with extra codes 658 or 659, suitable setup program part no. 00574959)
x	551	2 programmable transmitters (type 707050 according to data sheet 707050), output 4 to 20 mA/20 to 4 mA (USB), (only for measuring insert 2× Pt100 and with extra code 321, not in conjunction with extra codes 658 or 659, suitable setup program part no. 00574959)
x	859	1 programmable head transmitter Wtrans B with wireless data transmission (type 707060 according to data sheet 707060), (not in conjunction with extra codes 658 or 659, suitable setup program part no. 00488887)
x	866	1 programmable two-channel transmitter with HART® (type 707080 according to data sheet 707080), output 4 to 20 mA, (not in conjunction with extra codes 658 or 659, suitable software available for free – Device Type Manager (DTM) for PACTware)
x	867	1 programmable two-channel transmitter with HART®/SIL (type 707081 according to data sheet 707080), output 4 to 20 mA, (not in conjunction with extra codes 658 or 659, suitable software available for free – Device Type Manager (DTM) for PACTware)
x	562	Parts in contact with medium with PTFE covering, upon request
x	563	Parts in contact with medium with ECTFE (Halar®) coating, upon request
x	365	Inspection certificate 3.1 DIN EN 10204 insulation resistance
x	367	Inspection certificate 3.1 DIN EN 10204 pressure test
x	368	Inspection certificate 3.1 DIN EN 10204 leak test
x	374	Inspection certificate 3.1 DIN EN 10204 material

Note: For extra code transmitter please specify measuring range and, if applicable, output signal in plain text.

	(1)		(2)		(3)		(4)		(5)		(6)		(7)		(8)		(9)	
Order code	[ ]	-	[ ]	-	[ ]	-	[ ]	-	[ ]	-	[ ]	-	[ ]	-	[ ]	/	[ ]	, ...[a]
Order example	902820/50	-	402	-	1001	-	1	-	24	-	65	-	26	-	26	/	000	

[a] List extra codes in sequence and separate using commas.

JUMO GmbH & Co. KG
Delivery address: Mackenrodtstraße 14
36039 Fulda, Germany
Postal address: 36035 Fulda, Germany
Phone: +49 661 6003-0
Fax: +49 661 6003-607
Email: mail@jumo.net
Internet: www.jumo.net

JUMO UK LTD
JUMO House
Temple Bank, Riverway
Harlow, Essex, CM20 2DY, UK
Phone: +44 1279 63 55 33
Fax: +44 1279 62 50 29
Email: sales@jumo.co.uk
Internet: www.jumo.co.uk

JUMO Process Control, Inc.
6724 Joy Road
East Syracuse, NY 13057, USA
Phone: +1 315 437 5866
Fax: +1 315 437 5860
Email: info.us@jumo.net
Internet: www.jumousa.com

		(1)	**Basic type**
	902820/51		Screw-in RTD temperature probe with thermowell DIN 43772, form 4 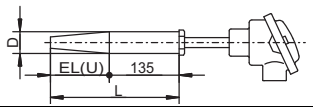
		(2)	**Operating temperature (additional versions upon request)**
x	150		-200 to +600 °C (wire-wound temperature sensor)
x	386		-50 to +260 °C (thin film temperature sensor)
x	402		-50 to +400 °C (thin film temperature sensor)
x	415		-50 to +600 °C (thin film temperature sensor)
		(3)	**Measuring insert (additional versions upon request)**
x	1001		1× Pt100 in 3-wire circuit
x	1003		1× Pt100 in 2-wire circuit
x	1011		1× Pt100 in 4-wire circuit
x	2001		2× Pt100 in 3-wire circuit
x	2003		2× Pt100 in 2-wire circuit
x	2011		2× Pt100 in four-wire circuit (only in conjunction with terminal head 321)
		(4)	**Tolerance class according to DIN EN 60751:2009 / IEC 60751:2008 (additional versions upon request)**
x	1		Class B (standard) (-50 to +500 °C)
x	2		Class A (-30 to +300 °C)
x	3		Class AA (0 to 150 °C)
		(5)	**Protection tube diameter D in mm (additional versions upon request)**
x	24		Ø 24 mm reduced to Ø 12.5 mm
		(6)	**Thermowell dimensions (insertion length/total length)**
x	65		65 mm/200 mm (previously form D4 according to DIN 43767)
x	125		125 mm/260 mm (previously form D5 according to DIN 43767)
	...		Upon request (Code: U + L)
		(7)	**Thermowell material**
x	26		Stainless steel 1.4571 (operating temperature 600 °C)
x	36		Steel 1.7335 (operating temperature 540 °C)
		(8)	**Protection tube material**
x	26		Stainless steel 1.4571
		(9)	**Extra codes**
x	000		None
x	658		SIL and PL compatible (only in conjunction with JUMO SIL-certified safety temperature limiters and monitors according to data sheet 701150, not in conjunction with extra codes 330, 331, 333, 334, 335, 337, 550, 551, 859, 866, and 867)
x	659		SIL and PL compatible (only in conjunction with dTRANS T06 temperature transmitter according to data sheet 707071, not in conjunction with extra codes 330, 331, 333, 334, 335, 337, 550, 551, 859, 866, and 867)
x	320		Terminal head form BUZ
x	321		Terminal head form BUZH
x	324		Terminal head form BBKS
x	326		Terminal head form KGI-1
x	547		Terminal head form BUZH with LED display
x	924		Terminal head form AB7 with LC plug-in display (only in conjunction with extra code 866 or 867)
x	925		Terminal head form BUZH with LC plug-in display (only in conjunction with extra code 866 or 867)
x	424		Terminal head with M12 machine connector (can only be selected in the case of measuring inserts with max. 4 wires, e.g., 1003, 1011, or 2003)
x	330		1 analog transmitter (type 707031 according to data sheet 707030), output 4 to 20 mA, (only for measuring insert 1× Pt100 in two or three-wire circuit, not in conjunction with extra codes 658 or 659)
x	331		1 programmable transmitter (type 707014 according to data sheet 707010), output 4 to 20 mA/20 to 4 mA, (only for measuring insert 1× Pt100, not in conjunction with extra codes 658 or 659, suitable setup program part no. 00605080)

JUMO GmbH & Co. KG
Delivery address: Mackenrodtstraße 14
36039 Fulda, Germany
Postal address: 36035 Fulda, Germany
Phone: +49 661 6003-0
Fax: +49 661 6003-607
Email: mail@jumo.net
Internet: www.jumo.net

JUMO UK LTD
JUMO House
Temple Bank, Riverway
Harlow, Essex, CM20 2DY, UK
Phone: +44 1279 63 55 33
Fax: +44 1279 62 50 29
Email: sales@jumo.co.uk
Internet: www.jumo.co.uk

JUMO Process Control, Inc.
6724 Joy Road
East Syracuse, NY 13057, USA
Phone: +1 315 437 5866
Fax: +1 315 437 5860
Email: info.us@jumo.net
Internet: www.jumousa.com

x	333	1 analog transmitter (type 707033 according to data sheet 707030), output 0 to 10 V, (only for measuring insert 1× Pt100 in two or three-wire circuit, not in conjunction with extra codes 658 or 659)
x	335	2 programmable transmitters (type 707014 according to data sheet 707010), output 4 to 20 mA/20 to 4 mA, (only for measuring insert 2× Pt100 and with extra code 321, not in conjunction with extra codes 658 or 659, suitable setup program part no. 00605080)
x	337	2 analog transmitters (type 707033 according to data sheet 707030), output 0 to 10 V, (only for measuring insert 2× Pt100 in two or three-wire circuit and with extra code 321, not in conjunction with extra codes 658 or 659)
x	550	1 programmable transmitter (type 707050 according to data sheet 707050), output 4 to 20 mA/20 to 4 mA (USB), (only for measuring insert 1× Pt100, not in conjunction with extra codes 658 or 659, suitable setup program part no. 00574959)
x	551	2 programmable transmitters (type 707050 according to data sheet 707050), output 4 to 20 mA/20 to 4 mA (USB), (only for measuring insert 2× Pt100 and with extra code 321, not in conjunction with extra codes 658 or 659, suitable setup program part no. 00574959)
x	859	1 programmable head transmitter Wtrans B with wireless data transmission (type 707060 according to data sheet 707060), (not in conjunction with extra codes 658 or 659, suitable setup program part no. 00488887)
x	866	1 programmable two-channel transmitter with HART® (type 707080 according to data sheet 707080), output 4 to 20 mA, (not in conjunction with extra codes 658 or 659, suitable software available for free – Device Type Manager (DTM) for PACTware)
x	867	1 programmable two-channel transmitter with HART®/SIL (type 707081 according to data sheet 707080), output 4 to 20 mA, (not in conjunction with extra codes 658 or 659, suitable software available for free – Device Type Manager (DTM) for PACTware)
x	562	Parts in contact with medium with PTFE covering, upon request
x	563	Parts in contact with medium with ECTFE (Halar®) coating, upon request
x	365	Inspection certificate 3.1 DIN EN 10204 insulation resistance
x	367	Inspection certificate 3.1 DIN EN 10204 pressure test
x	368	Inspection certificate 3.1 DIN EN 10204 leak test
x	374	Inspection certificate 3.1 DIN EN 10204 material

Note: For extra code transmitter please specify measuring range and, if applicable, output signal in plain text.

	(1)		(2)		(3)		(4)		(5)		(6)		(7)		(8)		(9)	
Order code	[ ]	-	[ ]	-	[ ]	-	[ ]	-	[ ]	-	[ ]	-	[ ]	-	[ ]	/	[ ]	, ...[a]
Order example	902820/51	-	402	-	1001	-	1	-	24	-	65	-	26	-	26	/	000	

[a] List extra codes in sequence and separate using commas.

JUMO GmbH & Co. KG
Delivery address: Mackenrodtstraße 14
36039 Fulda, Germany
Postal address: 36035 Fulda, Germany
Phone: +49 661 6003-0
Fax: +49 661 6003-607
Email: mail@jumo.net
Internet: www.jumo.net

JUMO UK LTD
JUMO House
Temple Bank, Riverway
Harlow, Essex, CM20 2DY, UK
Phone: +44 1279 63 55 33
Fax: +44 1279 62 50 29
Email: sales@jumo.co.uk
Internet: www.jumo.co.uk

JUMO Process Control, Inc.
6724 Joy Road
East Syracuse, NY 13057, USA
Phone: +1 315 437 5866
Fax: +1 315 437 5860
Email: info.us@jumo.net
Internet: www.jumousa.com

		(1)	**Basic type**
	902820/53		Screw-in RTD temperature probe with weld-in sleeve 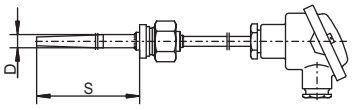
		(2)	**Operating temperature (additional versions upon request)**
x	150		-200 to +600 °C (wire-wound temperature sensor)
x	386		-50 to +260 °C (thin film temperature sensor)
x	402		-50 to +400 °C (thin film temperature sensor)
x	415		-50 to +600 °C (thin film temperature sensor)
		(3)	**Measuring insert (additional versions upon request)**
x	1001		1× Pt100 in 3-wire circuit
x	1003		1× Pt100 in 2-wire circuit
x	1011		1× Pt100 in 4-wire circuit
x	2001		2× Pt100 in 3-wire circuit
x	2003		2× Pt100 in 2-wire circuit
x	2011		2× Pt100 in four-wire circuit (only in conjunction with terminal head 321)
		(4)	**Tolerance class according to DIN EN 60751:2009 / IEC 60751:2008 (additional versions upon request)**
x	1		Class B (standard) (-50 to +500 °C)
x	2		Class A (-30 to +300 °C)
x	3		Class AA (0 to 150 °C)
		(5)	**Protection tube diameter D in mm (additional versions upon request)**
x	12		Ø 12 mm reduced to Ø 8 mm
		(6)	**Insertion length S[a]**
x	80		80 mm, steel
x	140		140 mm, steel
x	170		170 mm, steel or stainless steel
x	200		200 mm, steel or stainless steel
		(7)	**Process connection**
x	165		Union nut, thread G 3/4
		(8)	**Welding protective sleeve material**
x	01		Steel 1.0345
x	26		Stainless steel 1.4571
		(9)	**Extra codes**
x	000		None
x	658		SIL and PL compatible (only in conjunction with JUMO SIL-certified safety temperature limiters and monitors according to data sheet 701150, not in conjunction with extra codes 330, 331, 333, 334, 335, 337, 550, 551, 859, 866, and 867)
x	659		SIL and PL compatible (only in conjunction with dTRANS T06 temperature transmitter according to data sheet 707071, not in conjunction with extra codes 330, 331, 333, 334, 335, 337, 550, 551, 859, 866, and 867)
x	320		Terminal head form BUZ
x	321		Terminal head form BUZH
x	324		Terminal head form BBKS
x	326		Terminal head form KGI-1
x	547		Terminal head form BUZH with LED display
x	924		Terminal head form AB7 with LC plug-in display (only in conjunction with extra code 866 or 867)
x	925		Terminal head form BUZH with LC plug-in display (only in conjunction with extra code 866 or 867)
x	424		Terminal head with M12 machine connector (can only be selected in the case of measuring inserts with max. 4 wires, e.g., 1003, 1011, or 2003)
x	330		1 analog transmitter (type 707031 according to data sheet 707030), output 4 to 20 mA, (only for measuring insert 1× Pt100 in two or three-wire circuit, not in conjunction with extra codes 658 or 659)

JUMO GmbH & Co. KG
Delivery address: Mackenrodtstraße 14
36039 Fulda, Germany
Postal address: 36035 Fulda, Germany
Phone: +49 661 6003-0
Fax: +49 661 6003-607
Email: mail@jumo.net
Internet: www.jumo.net

JUMO UK LTD
JUMO House
Temple Bank, Riverway
Harlow, Essex, CM20 2DY, UK
Phone: +44 1279 63 55 33
Fax: +44 1279 62 50 29
Email: sales@jumo.co.uk
Internet: www.jumo.co.uk

JUMO Process Control, Inc.
6724 Joy Road
East Syracuse, NY 13057, USA
Phone: +1 315 437 5866
Fax: +1 315 437 5860
Email: info.us@jumo.net
Internet: www.jumousa.com

x	331	1 programmable transmitter (type 707014 according to data sheet 707010), output 4 to 20 mA/20 to 4 mA, (only for measuring insert 1× Pt100, not in conjunction with extra codes 658 or 659, suitable setup program part no. 00605080)
x	333	1 analog transmitter (type 707033 according to data sheet 707030), output 0 to 10 V, (only for measuring insert 1× Pt100 in two or three-wire circuit, not in conjunction with extra codes 658 or 659)
x	334	2 analog transmitters (type 707031 according to data sheet 707030), output 4 to 20 mA, (only for measuring insert 2× Pt100 in two or three-wire circuit and with extra code 321, not in conjunction with extra codes 658 or 659)
x	335	2 programmable transmitters (type 707014 according to data sheet 707010), output 4 to 20 mA/20 to 4 mA, (only for measuring insert 2× Pt100 and with extra code 321, not in conjunction with extra codes 658 or 659, suitable setup program part no. 00605080)
x	337	2 analog transmitters (type 707033 according to data sheet 707030), output 0 to 10 V, (only for measuring insert 2× Pt100 in two or three-wire circuit and with extra code 321, not in conjunction with extra codes 658 or 659)
x	550	1 programmable transmitter (type 707050 according to data sheet 707050), output 4 to 20 mA/20 to 4 mA (USB), (only for measuring insert 1× Pt100, not in conjunction with extra codes 658 or 659, suitable setup program part no. 00574959)
x	551	2 programmable transmitters (type 707050 according to data sheet 707050), output 4 to 20 mA/20 to 4 mA (USB), (only for measuring insert 2× Pt100 and with extra code 321, not in conjunction with extra codes 658 or 659, suitable setup program part no. 00574959)
x	859	1 programmable head transmitter Wtrans B with wireless data transmission (type 707060 according to data sheet 707060), (not in conjunction with extra codes 658 or 659, suitable setup program part no. 00488887)
x	866	1 programmable two-channel transmitter with HART® (type 707080 according to data sheet 707080), output 4 to 20 mA, (not in conjunction with extra codes 658 or 659, suitable software available for free – Device Type Manager (DTM) for PACTware)
x	867	1 programmable two-channel transmitter with HART®/SIL (type 707081 according to data sheet 707080), output 4 to 20 mA, (not in conjunction with extra codes 658 or 659, suitable software available for free – Device Type Manager (DTM) for PACTware)
x	562	Parts in contact with medium with PTFE covering, upon request
x	563	Parts in contact with medium with ECTFE (Halar®) coating, upon request
x	365	Inspection certificate 3.1 DIN EN 10204 insulation resistance
x	367	Inspection certificate 3.1 DIN EN 10204 pressure test
x	368	Inspection certificate 3.1 DIN EN 10204 leak test
x	374	Inspection certificate 3.1 DIN EN 10204 material

[a] Insertion length RTD temperature probe EL = S + 20 mm

Note: For extra code transmitter please specify measuring range and, if applicable, output signal in plain text.

	(1)		(2)		(3)		(4)		(5)		(6)		(7)		(8)		(9)	
Order code	[ ]	-	[ ]	-	[ ]	-	[ ]	-	[ ]	-	[ ]	-	[ ]	-	[ ]	/	[ ]	, ...[a]
Order example	902820/53	-	402	-	1001	-	1	-	12	-	80	-	165	-	26	/	000	

[a] List extra codes in sequence and separate using commas.

JUMO GmbH & Co. KG
Delivery address: Mackenrodtstraße 14
36039 Fulda, Germany
Postal address: 36035 Fulda, Germany
Phone: +49 661 6003-0
Fax: +49 661 6003-607
Email: mail@jumo.net
Internet: www.jumo.net

JUMO UK LTD
JUMO House
Temple Bank, Riverway
Harlow, Essex, CM20 2DY, UK
Phone: +44 1279 63 55 33
Fax: +44 1279 62 50 29
Email: sales@jumo.co.uk
Internet: www.jumo.co.uk

JUMO Process Control, Inc.
6724 Joy Road
East Syracuse, NY 13057, USA
Phone: +1 315 437 5866
Fax: +1 315 437 5860
Email: info.us@jumo.net
Internet: www.jumousa.com

		(1)	**Basic type**
	902820/60		Screw-in RTD temperature probe for thermowell with internal thread 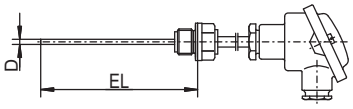
		(2)	**Operating temperature (additional versions upon request)**
x	150		-200 to +600 °C (wire-wound temperature sensor)
x	386		-50 to +260 °C (thin film temperature sensor)
x	402		-50 to +400 °C (thin film temperature sensor)
x	415		-50 to +600 °C (thin film temperature sensor)
		(3)	**Measuring insert (additional versions upon request)**
x	1001		1× Pt100 in 3-wire circuit
x	1003		1× Pt100 in 2-wire circuit
x	1011		1× Pt100 in 4-wire circuit
x	2001		2× Pt100 in 3-wire circuit
x	2003		2× Pt100 in 2-wire circuit
x	2011		2× Pt100 in four-wire circuit (only in conjunction with terminal head 321)
		(4)	**Tolerance class according to DIN EN 60751:2009 / IEC 60751:2008 (additional versions upon request)**
x	1		Class B (standard) (-50 to +500 °C)
x	2		Class A (-30 to +300 °C)
x	3		Class AA (0 to 150 °C)
		(5)	**Protection tube diameter D in mm (additional versions upon request)**
x	6		Ø 6 mm
		(6)	**Insertion length EL in mm (EL up to 1000 mm)**
	...		Specification in plain text
		(7)	**Process connection (additional versions upon request)**
x	126		Screw connection M18 × 1.5
		(8)	**Protection tube material**
x	26		Stainless steel 1.4571
		(9)	**Extra codes**
x	000		None
x	658		SIL and PL compatible (only in conjunction with JUMO SIL-certified safety temperature limiters and monitors according to data sheet 701150, not in conjunction with extra codes 330, 331, 333, 334, 335, 337, 550, 551, 859, 866, and 867)
x	659		SIL and PL compatible (only in conjunction with dTRANS T06 temperature transmitter according to data sheet 707071, not in conjunction with extra codes 330, 331, 333, 334, 335, 337, 550, 551, 859, 866, and 867)
x	320		Terminal head form BUZ
x	321		Terminal head form BUZH
x	324		Terminal head form BBKS
x	326		Terminal head form KGI-1
x	547		Terminal head form BUZH with LED display
x	924		Terminal head form AB7 with LC plug-in display (only in conjunction with extra code 866 or 867)
x	925		Terminal head form BUZH with LC plug-in display (only in conjunction with extra code 866 or 867)
x	424		Terminal head with M12 machine connector (can only be selected in the case of measuring inserts with max. 4 wires, e.g., 1003, 1011, or 2003)
x	330		1 analog transmitter (type 707031 according to data sheet 707030), output 4 to 20 mA, (only for measuring insert 1× Pt100 in two or three-wire circuit, not in conjunction with extra codes 658 or 659)
x	331		1 programmable transmitter (type 707014 according to data sheet 707010), output 4 to 20 mA/20 to 4 mA, (only for measuring insert 1× Pt100, not in conjunction with extra codes 658 or 659, suitable setup program part no. 00605080)
x	333		1 analog transmitter (type 707033 according to data sheet 707030), output 0 to 10 V, (only for measuring insert 1× Pt100 in two or three-wire circuit, not in conjunction with extra codes 658 or 659)

JUMO GmbH & Co. KG
Delivery address: Mackenrodtstraße 14
36039 Fulda, Germany
Postal address: 36035 Fulda, Germany
Phone: +49 661 6003-0
Fax: +49 661 6003-607
Email: mail@jumo.net
Internet: www.jumo.net

JUMO UK LTD
JUMO House
Temple Bank, Riverway
Harlow, Essex, CM20 2DY, UK
Phone: +44 1279 63 55 33
Fax: +44 1279 62 50 29
Email: sales@jumo.co.uk
Internet: www.jumo.co.uk

JUMO Process Control, Inc.
6724 Joy Road
East Syracuse, NY 13057, USA
Phone: +1 315 437 5866
Fax: +1 315 437 5860
Email: info.us@jumo.net
Internet: www.jumousa.com

x	334	2 analog transmitters (type 707031 according to data sheet 707030), output 4 to 20 mA, (only for measuring insert 2× Pt100 in two or three-wire circuit and with extra code 321, not in conjunction with extra codes 658 or 659)
x	335	2 programmable transmitters (type 707014 according to data sheet 707010), output 4 to 20 mA/20 to 4 mA, (only for measuring insert 2× Pt100 and with extra code 321, not in conjunction with extra codes 658 or 659, suitable setup program part no. 00605080)
x	337	2 analog transmitters (type 707033 according to data sheet 707030), output 0 to 10 V, (only for measuring insert 2× Pt100 in two or three-wire circuit and with extra code 321, not in conjunction with extra codes 658 or 659)
x	550	1 programmable transmitter (type 707050 according to data sheet 707050), output 4 to 20 mA/20 to 4 mA (USB), (only for measuring insert 1× Pt100, not in conjunction with extra codes 658 or 659, suitable setup program part no. 00574959)
x	551	2 programmable transmitters (type 707050 according to data sheet 707050), output 4 to 20 mA/20 to 4 mA (USB), (only for measuring insert 2× Pt100 and with extra code 321, not in conjunction with extra codes 658 or 659, suitable setup program part no. 00574959)
x	859	1 programmable head transmitter Wtrans B with wireless data transmission (type 707060 according to data sheet 707060), (not in conjunction with extra codes 658 or 659, suitable setup program part no. 00488887)
x	866	1 programmable two-channel transmitter with HART® (type 707080 according to data sheet 707080), output 4 to 20 mA, (not in conjunction with extra codes 658 or 659, suitable software available for free – Device Type Manager (DTM) for PACTware)
x	867	1 programmable two-channel transmitter with HART®/SIL (type 707081 according to data sheet 707080), output 4 to 20 mA, (not in conjunction with extra codes 658 or 659, suitable software available for free – Device Type Manager (DTM) for PACTware)
x	562	Parts in contact with medium with PTFE covering, upon request
x	563	Parts in contact with medium with ECTFE (Halar®) coating, upon request
x	365	Inspection certificate 3.1 DIN EN 10204 insulation resistance
x	367	Inspection certificate 3.1 DIN EN 10204 pressure test
x	368	Inspection certificate 3.1 DIN EN 10204 leak test
x	374	Inspection certificate 3.1 DIN EN 10204 material

Note: For extra code transmitter please specify measuring range and, if applicable, output signal in plain text.

	(1)		(2)		(3)		(4)		(5)		(6)		(7)		(8)		(9)	
Order code	[ ]	-	[ ]	-	[ ]	-	[ ]	-	[ ]	-	[ ]	-	[ ]	-	[ ]	/	[ ]	, ...[a]
Order example	902820/60	-	402	-	1001	-	1	-	6	-	250	-	126	-	26	/	000	

[a] List extra codes in sequence and separate using commas.

JUMO GmbH & Co. KG
Delivery address: Mackenrodtstraße 14
36039 Fulda, Germany
Postal address: 36035 Fulda, Germany
Phone: +49 661 6003-0
Fax: +49 661 6003-607
Email: mail@jumo.net
Internet: www.jumo.net

JUMO UK LTD
JUMO House
Temple Bank, Riverway
Harlow, Essex, CM20 2DY, UK
Phone: +44 1279 63 55 33
Fax: +44 1279 62 50 29
Email: sales@jumo.co.uk
Internet: www.jumo.co.uk

JUMO Process Control, Inc.
6724 Joy Road
East Syracuse, NY 13057, USA
Phone: +1 315 437 5866
Fax: +1 315 437 5860
Email: info.us@jumo.net
Internet: www.jumousa.com

		(1)	**Basic type**
	902820/62		Screw-in RTD temperature probe with union nut and replaceable measuring insert for thermowell with external thread 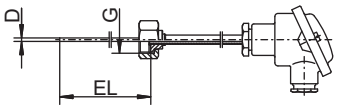
		(2)	**Operating temperature (additional versions upon request)**
x	150		-200 to +600 °C (wire-wound temperature sensor)
x	386		-50 to +260 °C (thin film temperature sensor)
x	402		-50 to +400 °C (thin film temperature sensor)
x	415		-50 to +600 °C (thin film temperature sensor)
		(3)	**Measuring insert (additional versions upon request)**
x	1001		1× Pt100 in 3-wire circuit
x	1003		1× Pt100 in 2-wire circuit
x	1011		1× Pt100 in 4-wire circuit
x	2001		2× Pt100 in 3-wire circuit
x	2003		2× Pt100 in 2-wire circuit
x	2011		2× Pt100 in four-wire circuit (only in conjunction with terminal head 321)
		(4)	**Tolerance class according to DIN EN 60751:2009 / IEC 60751:2008 (additional versions upon request)**
x	1		Class B (standard) (-50 to +500 °C)
x	2		Class A (-30 to +300 °C)
x	3		Class AA (0 to 150 °C)
		(5)	**Protection tube diameter D in mm (additional versions upon request)**
x	6		Ø 6 mm
		(6)	**Insertion length EL in mm (EL up to 1000 mm)**
	...		Specification in plain text
		(7)	**Process connection (additional versions upon request)**
x	165		Union nut, thread G 3/4
		(8)	**Protection tube material**
x	26		Stainless steel 1.4571
		(9)	**Extra codes**
x	000		None
x	658		SIL and PL compatible (only in conjunction with JUMO SIL-certified safety temperature limiters and monitors according to data sheet 701150, not in conjunction with extra codes 330, 331, 333, 334, 335, 337, 550, 551, 859, 866, and 867)
x	659		SIL and PL compatible (only in conjunction with dTRANS T06 temperature transmitter according to data sheet 707071, not in conjunction with extra codes 330, 331, 333, 334, 335, 337, 550, 551, 859, 866, and 867)
x	320		Terminal head form BUZ
x	321		Terminal head form BUZH
x	324		Terminal head form BBKS
x	326		Terminal head form KGI-1
x	547		Terminal head form BUZH with LED display
x	924		Terminal head form AB7 with LC plug-in display (only in conjunction with extra code 866 or 867)
x	925		Terminal head form BUZH with LC plug-in display (only in conjunction with extra code 866 or 867)
x	424		Terminal head with M12 machine connector (can only be selected in the case of measuring inserts with max. 4 wires, e.g., 1003, 1011, or 2003)
x	330		1 analog transmitter (type 707031 according to data sheet 707030), output 4 to 20 mA, (only for measuring insert 1× Pt100 in two or three-wire circuit, not in conjunction with extra codes 658 or 659)
x	331		1 programmable transmitter (type 707014 according to data sheet 707010), output 4 to 20 mA/20 to 4 mA, (only for measuring insert 1× Pt100, not in conjunction with extra codes 658 or 659, suitable setup program part no. 00605080)
x	333		1 analog transmitter (type 707033 according to data sheet 707030), output 0 to 10 V, (only for measuring insert 1× Pt100 in two or three-wire circuit, not in conjunction with extra codes 658 or 659)

JUMO GmbH & Co. KG
Delivery address: Mackenrodtstraße 14
36039 Fulda, Germany
Postal address: 36035 Fulda, Germany
Phone: +49 661 6003-0
Fax: +49 661 6003-607
Email: mail@jumo.net
Internet: www.jumo.net

JUMO UK LTD
JUMO House
Temple Bank, Riverway
Harlow, Essex, CM20 2DY, UK
Phone: +44 1279 63 55 33
Fax: +44 1279 62 50 29
Email: sales@jumo.co.uk
Internet: www.jumo.co.uk

JUMO Process Control, Inc.
6724 Joy Road
East Syracuse, NY 13057, USA
Phone: +1 315 437 5866
Fax: +1 315 437 5860
Email: info.us@jumo.net
Internet: www.jumousa.com

x	334	2 analog transmitters (type 707031 according to data sheet 707030), output 4 to 20 mA, (only for measuring insert 2× Pt100 in two or three-wire circuit and with extra code 321, not in conjunction with extra codes 658 or 659)
x	335	2 programmable transmitters (type 707014 according to data sheet 707010), output 4 to 20 mA/20 to 4 mA, (only for measuring insert 2× Pt100 and with extra code 321, not in conjunction with extra codes 658 or 659, suitable setup program part no. 00605080)
x	337	2 analog transmitters (type 707033 according to data sheet 707030), output 0 to 10 V, (only for measuring insert 2× Pt100 in two or three-wire circuit and with extra code 321, not in conjunction with extra codes 658 or 659)
x	550	1 programmable transmitter (type 707050 according to data sheet 707050), output 4 to 20 mA/20 to 4 mA (USB), (only for measuring insert 1× Pt100, not in conjunction with extra codes 658 or 659, suitable setup program part no. 00574959)
x	551	2 programmable transmitters (type 707050 according to data sheet 707050), output 4 to 20 mA/20 to 4 mA (USB), (only for measuring insert 2× Pt100 and with extra code 321, not in conjunction with extra codes 658 or 659, suitable setup program part no. 00574959)
x	859	1 programmable head transmitter Wtrans B with wireless data transmission (type 707060 according to data sheet 707060), (not in conjunction with extra codes 658 or 659, suitable setup program part no. 00488887)
x	866	1 programmable two-channel transmitter with HART® (type 707080 according to data sheet 707080), output 4 to 20 mA, (not in conjunction with extra codes 658 or 659, suitable software available for free – Device Type Manager (DTM) for PACTware)
x	867	1 programmable two-channel transmitter with HART®/SIL (type 707081 according to data sheet 707080), output 4 to 20 mA, (not in conjunction with extra codes 658 or 659, suitable software available for free – Device Type Manager (DTM) for PACTware)
x	562	Parts in contact with medium with PTFE covering, upon request
x	563	Parts in contact with medium with ECTFE (Halar®) coating, upon request
x	365	Inspection certificate 3.1 DIN EN 10204 insulation resistance
x	367	Inspection certificate 3.1 DIN EN 10204 pressure test
x	368	Inspection certificate 3.1 DIN EN 10204 leak test
x	374	Inspection certificate 3.1 DIN EN 10204 material

Note: For extra code transmitter please specify measuring range and, if applicable, output signal in plain text.

	(1)		(2)		(3)		(4)		(5)		(6)		(7)		(8)		(9)	
Order code	[ ]	-	[ ]	-	[ ]	-	[ ]	-	[ ]	-	[ ]	-	[ ]	-	[ ]	/	[ ]	, ...[a]
Order example	902820/62	-	402	-	1001	-	1	-	6	-	250	-	165	-	26	/	000	

[a] List extra codes in sequence and separate using commas.

JUMO GmbH & Co. KG
Delivery address: Mackenrodtstraße 14
36039 Fulda, Germany
Postal address: 36035 Fulda, Germany
Phone: +49 661 6003-0
Fax: +49 661 6003-607
Email: mail@jumo.net
Internet: www.jumo.net

JUMO UK LTD
JUMO House
Temple Bank, Riverway
Harlow, Essex, CM20 2DY, UK
Phone: +44 1279 63 55 33
Fax: +44 1279 62 50 29
Email: sales@jumo.co.uk
Internet: www.jumo.co.uk

JUMO Process Control, Inc.
6724 Joy Road
East Syracuse, NY 13057, USA
Phone: +1 315 437 5866
Fax: +1 315 437 5860
Email: info.us@jumo.net
Internet: www.jumousa.com

		(1)	**Basic type**
	902820/63		Screw-in RTD temperature probe with union nut and non-replaceable measuring insert for thermowell with external thread 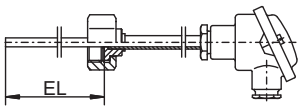
		(2)	**Operating temperature (additional versions upon request)**
x	150		-200 to +600 °C (wire-wound temperature sensor)
x	386		-50 to +260 °C (thin film temperature sensor)
x	402		-50 to +400 °C (thin film temperature sensor)
x	415		-50 to +600 °C (thin film temperature sensor)
		(3)	**Measuring insert (additional versions upon request)**
x	1001		1× Pt100 in 3-wire circuit
x	1003		1× Pt100 in 2-wire circuit
x	1011		1× Pt100 in 4-wire circuit
x	2001		2× Pt100 in 3-wire circuit
x	2003		2× Pt100 in 2-wire circuit
x	2011		2× Pt100 in four-wire circuit (only in conjunction with terminal head 321)
		(4)	**Tolerance class according to DIN EN 60751:2009 / IEC 60751:2008 (additional versions upon request)**
x	1		Class B (standard) (-50 to +500 °C)
x	2		Class A (-30 to +300 °C)
x	3		Class AA (0 to 150 °C)
		(5)	**Protection tube diameter D in mm (additional versions upon request)**
x	6		Ø 6 mm
x	9		Ø 9 mm
		(6)	**Insertion length EL in mm (EL up to 1000 mm)**
	...		Specification in plain text
		(7)	**Process connection (additional versions upon request)**
x	165		Union nut, thread G 3/4
		(8)	**Protection tube material**
x	26		Stainless steel 1.4571
		(9)	**Extra codes**
x	000		None
x	658		SIL and PL compatible (only in conjunction with JUMO SIL-certified safety temperature limiters and monitors according to data sheet 701150, not in conjunction with extra codes 330, 331, 333, 334, 335, 337, 550, 551, 859, 866, and 867)
x	659		SIL and PL compatible (only in conjunction with dTRANS T06 temperature transmitter according to data sheet 707071, not in conjunction with extra codes 330, 331, 333, 334, 335, 337, 550, 551, 859, 866, and 867)
x	320		Terminal head form BUZ
x	321		Terminal head form BUZH
x	324		Terminal head form BBKS
x	326		Terminal head form KGI-1
x	547		Terminal head form BUZH with LED display
x	924		Terminal head form AB7 with LC plug-in display (only in conjunction with extra code 866 or 867)
x	925		Terminal head form BUZH with LC plug-in display (only in conjunction with extra code 866 or 867)
x	424		Terminal head with M12 machine connector (can only be selected in the case of measuring inserts with max. 4 wires, e.g., 1003, 1011, or 2003)
x	330		1 analog transmitter (type 707031 according to data sheet 707030), output 4 to 20 mA, (only for measuring insert 1× Pt100 in two or three-wire circuit, not in conjunction with extra codes 658 or 659)
x	331		1 programmable transmitter (type 707014 according to data sheet 707010), output 4 to 20 mA/20 to 4 mA, (only for measuring insert 1× Pt100, not in conjunction with extra codes 658 or 659, suitable setup program part no. 00605080)
x	333		1 analog transmitter (type 707033 according to data sheet 707030), output 0 to 10 V, (only for measuring insert 1× Pt100 in two or three-wire circuit, not in conjunction with extra codes 658 or 659)

JUMO GmbH & Co. KG
Delivery address: Mackenrodtstraße 14
36039 Fulda, Germany
Postal address: 36035 Fulda, Germany
Phone: +49 661 6003-0
Fax: +49 661 6003-607
Email: mail@jumo.net
Internet: www.jumo.net

JUMO UK LTD
JUMO House
Temple Bank, Riverway
Harlow, Essex, CM20 2DY, UK
Phone: +44 1279 63 55 33
Fax: +44 1279 62 50 29
Email: sales@jumo.co.uk
Internet: www.jumo.co.uk

JUMO Process Control, Inc.
6724 Joy Road
East Syracuse, NY 13057, USA
Phone: +1 315 437 5866
Fax: +1 315 437 5860
Email: info.us@jumo.net
Internet: www.jumousa.com

x	334	2 analog transmitters (type 707031 according to data sheet 707030), output 4 to 20 mA, (only for measuring insert 2× Pt100 in two or three-wire circuit and with extra code 321, not in conjunction with extra codes 658 or 659)
x	335	2 programmable transmitters (type 707014 according to data sheet 707010), output 4 to 20 mA/20 to 4 mA, (only for measuring insert 2× Pt100 and with extra code 321, not in conjunction with extra codes 658 or 659, suitable setup program part no. 00605080)
x	337	2 analog transmitters (type 707033 according to data sheet 707030), output 0 to 10 V, (only for measuring insert 2× Pt100 in two or three-wire circuit and with extra code 321, not in conjunction with extra codes 658 or 659)
x	550	1 programmable transmitter (type 707050 according to data sheet 707050), output 4 to 20 mA/20 to 4 mA (USB), (only for measuring insert 1× Pt100, not in conjunction with extra codes 658 or 659, suitable setup program part no. 00574959)
x	551	2 programmable transmitters (type 707050 according to data sheet 707050), output 4 to 20 mA/20 to 4 mA (USB), (only for measuring insert 2× Pt100 and with extra code 321, not in conjunction with extra codes 658 or 659, suitable setup program part no. 00574959)
x	859	1 programmable head transmitter Wtrans B with wireless data transmission (type 707060 according to data sheet 707060), (not in conjunction with extra codes 658 or 659, suitable setup program part no. 00488887)
x	866	1 programmable two-channel transmitter with HART® (type 707080 according to data sheet 707080), output 4 to 20 mA, (not in conjunction with extra codes 658 or 659, suitable software available for free – Device Type Manager (DTM) for PACTware)
x	867	1 programmable two-channel transmitter with HART®/SIL (type 707081 according to data sheet 707080), output 4 to 20 mA, (not in conjunction with extra codes 658 or 659, suitable software available for free – Device Type Manager (DTM) for PACTware)
x	562	Parts in contact with medium with PTFE covering, upon request
x	563	Parts in contact with medium with ECTFE (Halar®) coating, upon request
x	365	Inspection certificate 3.1 DIN EN 10204 insulation resistance
x	367	Inspection certificate 3.1 DIN EN 10204 pressure test
x	368	Inspection certificate 3.1 DIN EN 10204 leak test
x	374	Inspection certificate 3.1 DIN EN 10204 material

Note: For extra code transmitter please specify measuring range and, if applicable, output signal in plain text.

	(1)		(2)		(3)		(4)		(5)		(6)		(7)		(8)		(9)	
Order code	[ ]	-	[ ]	-	[ ]	-	[ ]	-	[ ]	-	[ ]	-	[ ]	-	[ ]	/	[ ]	, ...[a]
Order example	902820/63	-	402	-	1001	-	1	-	6	-	250	-	165	-	26	/	000	

[a] List extra codes in sequence and separate using commas.

JUMO GmbH & Co. KG
Delivery address: Mackenrodtstraße 14
36039 Fulda, Germany
Postal address: 36035 Fulda, Germany
Phone: +49 661 6003-0
Fax: +49 661 6003-607
Email: mail@jumo.net
Internet: www.jumo.net

JUMO UK LTD
JUMO House
Temple Bank, Riverway
Harlow, Essex, CM20 2DY, UK
Phone: +44 1279 63 55 33
Fax: +44 1279 62 50 29
Email: sales@jumo.co.uk
Internet: www.jumo.co.uk

JUMO Process Control, Inc.
6724 Joy Road
East Syracuse, NY 13057, USA
Phone: +1 315 437 5866
Fax: +1 315 437 5860
Email: info.us@jumo.net
Internet: www.jumousa.com

Ⓔx II 1/2 G Ex ia IIC T1...T6 Ga/Gb
Ⓔx II 1/2 D Ex ia IIIC T80 °C...T400 °C Da/Db
Ⓔx II 1/2 G Ex ia/d IIC T1...T6 Ga/Gb
Ⓔx II 1/2 D Ex ia/tb IIIC T80 °C...T400 °C

		(1)	**Basic type**
	902820/10		Screw-in RTD temperature probe with continuous protection tube 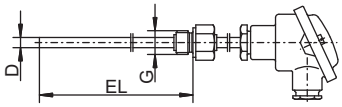
		(2)	**Operating temperature (additional versions upon request)**
x	150		-200 to +600 °C (wire-wound temperature sensor)
x	415		-50 to +600 °C (thin film temperature sensor)
		(3)	**Measuring insert (additional versions upon request)**
x	1001		1× Pt100 in three-wire circuit (not in conjunction with transmitter 331)
x	1003		1× Pt100 in two-wire circuit (not in conjunction with transmitter 331)
x	1011		1× Pt100 in 4-wire circuit
x	2001		2× Pt100 in 3-wire circuit
x	2003		2× Pt100 in two-wire circuit (not in conjunction with transmitter 331)
		(4)	**Tolerance class according to DIN EN 60751:2009 / IEC 60751:2008**
x	1		Class B (standard) (-50 to +500 °C)
x	2		Class A (-30 to +300 °C)
x	3		Class AA (0 to 150 °C)
		(5)	**Protection tube diameter D in mm (additional versions upon request)**
x	9		Ø 9 × 1 mm (for use in zone 0 or 20, upon request)
x	11		Ø 11 × 2 mm
		(6)	**Insertion length EL in mm (EL up to 1000 mm)**
	...		Specification in plain text
		(7)	**Process connection (additional versions upon request)**
x	104		Screw connection G 1/2
x	106		Screw connection G 1
x	144		Screw connection 1/2-14 NPT
x	146		Screw connection 1-11.5 NPT
		(8)	**Protection tube material**
x	26		Stainless steel 1.4571
x	60		Titanium, upon request
x	80		Tantalum, upon request
x	81		Inconel, upon request
x	82		HASTELLOY®, upon request
		(9)	**Extra codes**
x	658		SIL and PL compatible (only in conjunction with JUMO SIL-certified safety temperature limiters and monitors according to data sheet 701150, not in conjunction with extra codes 331, 868, and 869)
x	659		SIL and PL compatible (only in conjunction with dTRANS T06 temperature transmitter according to data sheet 707071, not in conjunction with extra codes 331, 868, and 869)
x	**362**		**Ex-protection Ex according to Directive 2014/34/EU (ATEX)**
x	084		CCC certification (only in connection with extra code 362)
x	292		Separation element according to IEC 60079
x	320		Terminal head form BUZ
x	321		Terminal head form BUZH
x	326		Terminal head form KGI-1
x	397		Terminal head form BEGF
x	399		Terminal head form XD-A "Ex D IIC" and "Ex tb IIIC" made from die-cast aluminum

JUMO GmbH & Co. KG
Delivery address: Mackenrodtstraße 14
36039 Fulda, Germany
Postal address: 36035 Fulda, Germany
Phone: +49 661 6003-0
Fax: +49 661 6003-607
Email: mail@jumo.net
Internet: www.jumo.net

JUMO UK LTD
JUMO House
Temple Bank, Riverway
Harlow, Essex, CM20 2DY, UK
Phone: +44 1279 63 55 33
Fax: +44 1279 62 50 29
Email: sales@jumo.co.uk
Internet: www.jumo.co.uk

JUMO Process Control, Inc.
6724 Joy Road
East Syracuse, NY 13057, USA
Phone: +1 315 437 5866
Fax: +1 315 437 5860
Email: info.us@jumo.net
Internet: www.jumousa.com

x	541	Terminal head form XD-S "Ex D IIC" and "Ex tb IIIC" made from stainless steel
x	547	Terminal head form BUZH with LED display
x	924	Terminal head form AB7 with LC plug-in display (only in conjunction with extra code 868 or 869)
x	925	Terminal head form BUZH with LC plug-in display (only in conjunction with extra code 868 or 869)
x	661	LED display Ex "ia" (only in conjunction with extra code 321, 399, or 541)
x	789	LED display Ex "ib" (only in conjunction with extra code 399 or 541)
x	424	Terminal head with M12 machine connector (can only be selected in the case of measuring inserts with max. 4 wires, e.g., 1003, 1011, or 2003)
x	331	1 programmable Ex transmitter (type 707015 according to data sheet 707010), output 4 to 20 mA/20 to 4 mA, (only for measuring insert 1× Pt100, not in conjunction with extra codes 658 or 659, suitable setup program part no. 00605080)
x	868	1 programmable two-channel transmitter with HART/EX (type 707085 according to data sheet 707080), output 4 to 20 mA, (not in conjunction with extra codes 658 or 659, suitable software available for free – Device Type Manager (DTM) for PACTware)
x	869	1 programmable two-channel transmitter with HART/EX/SIL (type 707086 according to data sheet 707080), output 4 to 20 mA, (not in conjunction with extra codes 658 or 659, suitable software available for free – Device Type Manager (DTM) for PACTware)
x	562	Parts in contact with medium with PTFE covering, upon request
x	563	Parts in contact with medium with ECTFE (Halar®) coating, upon request
x	365	Inspection certificate 3.1 DIN EN 10204 insulation resistance
x	367	Inspection certificate 3.1 DIN EN 10204 pressure test
x	368	Inspection certificate 3.1 DIN EN 10204 leak test
x	374	Inspection certificate 3.1 DIN EN 10204 material

Note: For extra code transmitter please specify measuring range and, if applicable, output signal in plain text.

	(1)		(2)		(3)		(4)		(5)		(6)		(7)		(8)		(9)	
Order code		-		-		-		-		-		-		-		/	**362**	, ...[a]
Order example	902820/10	-	415	-	1001	-	1	-	9	-	250	-	104	-	26	/	362	

[a] List extra codes in sequence and separate using commas.

Additional information:
In which zone is the device used?

Caution:
For application in zones 20, 21, and 22, only a terminal head with protection type IP65 is possible.

Note:
The precise Ex identification marking is provided upon delivery on the nameplate and in the operating manual.

The specified operating temperatures are maximum values based on the applied sensing element. Operating temperatures in Ex areas are severely restricted. When determining the respective maximum operating temperature, please consult the operating manual (Chapter 5).

The specified operating temperatures of the thermowell materials are maximum values based on the pressure resistance of the material used. Operating temperatures in Ex areas are severely restricted. When determining the respective maximum operating temperature, please consult the operating manual (Chapter 5).

Due to the complexity of the possible versions, not all variants can be illustrated. Please note that certain combinations cannot be supplied for all categories according to Ex.

JUMO GmbH & Co. KG
Delivery address: Mackenrodtstraße 14
36039 Fulda, Germany
Postal address: 36035 Fulda, Germany
Phone: +49 661 6003-0
Fax: +49 661 6003-607
Email: mail@jumo.net
Internet: www.jumo.net

JUMO UK LTD
JUMO House
Temple Bank, Riverway
Harlow, Essex, CM20 2DY, UK
Phone: +44 1279 63 55 33
Fax: +44 1279 62 50 29
Email: sales@jumo.co.uk
Internet: www.jumo.co.uk

JUMO Process Control, Inc.
6724 Joy Road
East Syracuse, NY 13057, USA
Phone: +1 315 437 5866
Fax: +1 315 437 5860
Email: info.us@jumo.net
Internet: www.jumousa.com

Ⓔx II 1/2 G Ex ia IIC T1...T6 Ga/Gb
Ⓔx II 1/2 D Ex ia IIIC T80 °C...T400 °C Da/Db
Ⓔx II 1/2 G Ex ia/d IIC T1...T6 Ga/Gb
Ⓔx II 1/2 D Ex ia/tb IIIC T80 °C...T400 °C

		(1)	**Basic type**
	902820/11		Screw-in RTD temperature probe with reduced protection tube 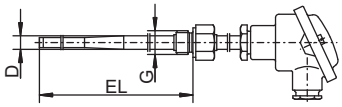
		(2)	**Operating temperature (additional versions upon request)**
x	150		-200 to +600 °C (wire-wound temperature sensor)
x	415		-50 to +600 °C (thin film temperature sensor)
		(3)	**Measuring insert (additional versions upon request)**
x	1001		1× Pt100 in three-wire circuit (not in conjunction with transmitter 331)
x	1003		1× Pt100 in two-wire circuit (not in conjunction with transmitter 331)
x	1011		1× Pt100 in 4-wire circuit
x	2001		2× Pt100 in 3-wire circuit
x	2003		2× Pt100 in two-wire circuit (not in conjunction with transmitter 331)
		(4)	**Tolerance class according to DIN EN 60751:2009 / IEC 60751:2008**
x	1		Class B (standard) (-50 to +500 °C)
x	2		Class A (-30 to +300 °C)
x	3		Class AA (0 to 150 °C)
		(5)	**Protection tube diameter D in mm (additional versions upon request)**
x	12		Ø 12 × 2.5 mm reduced to Ø 9 mm (for use in zone 0 or 20 upon request)
		(6)	**Insertion length EL in mm (EL up to 1000 mm)**
	...		Specification in plain text
		(7)	**Process connection (additional versions upon request)**
x	104		Screw connection G 1/2
x	106		Screw connection G 1
x	144		Screw connection 1/2-14 NPT
x	146		Screw connection 1-11.5 NPT
		(8)	**Protection tube material**
x	26		Stainless steel 1.4571
x	60		Titanium, upon request
x	80		Tantalum, upon request
x	81		Inconel, upon request
x	82		HASTELLOY®, upon request
		(9)	**Extra codes**
x	658		SIL and PL compatible (only in conjunction with JUMO SIL-certified safety temperature limiters and monitors according to data sheet 701150, not in conjunction with extra codes 331, 868, and 869)
x	659		SIL and PL compatible (only in conjunction with dTRANS T06 temperature transmitter according to data sheet 707071, not in conjunction with extra codes 331, 868, and 869)
x	**362**		**Ex-protection Ex according to Directive 2014/34/EU (ATEX)**
x	084		CCC certification (only in connection with extra code 362)
x	292		Separation element according to IEC 60079
x	320		Terminal head form BUZ
x	321		Terminal head form BUZH
x	326		Terminal head form KGI-1
x	397		Terminal head form BEGF
x	399		Terminal head form XD-A "Ex D IIC" and "Ex tb IIIC" made from die-cast aluminum
x	541		Terminal head form XD-S "Ex D IIC" and "Ex tb IIIC" made from stainless steel

JUMO GmbH & Co. KG
Delivery address: Mackenrodtstraße 14
36039 Fulda, Germany
Postal address: 36035 Fulda, Germany
Phone: +49 661 6003-0
Fax: +49 661 6003-607
Email: mail@jumo.net
Internet: www.jumo.net

JUMO UK LTD
JUMO House
Temple Bank, Riverway
Harlow, Essex, CM20 2DY, UK
Phone: +44 1279 63 55 33
Fax: +44 1279 62 50 29
Email: sales@jumo.co.uk
Internet: www.jumo.co.uk

JUMO Process Control, Inc.
6724 Joy Road
East Syracuse, NY 13057, USA
Phone: +1 315 437 5866
Fax: +1 315 437 5860
Email: info.us@jumo.net
Internet: www.jumousa.com

x	547	Terminal head form BUZH with LED display
x	924	Terminal head form AB7 with LC plug-in display (only in conjunction with extra code 868 or 869)
x	925	Terminal head form BUZH with LC plug-in display (only in conjunction with extra code 868 or 869)
x	661	LED display Ex "ia" (only in conjunction with extra code 321, 399, or 541)
x	789	LED display Ex "ib" (only in conjunction with extra code 399 or 541)
x	424	Terminal head with M12 machine connector (can only be selected in the case of measuring inserts with max. 4 wires, e.g., 1003, 1011, or 2003)
x	331	1 programmable Ex transmitter (type 707015 according to data sheet 707010), output 4 to 20 mA/20 to 4 mA, (only for measuring insert 1× Pt100, not in conjunction with extra codes 658 or 659, suitable setup program part no. 00605080)
x	868	1 programmable two-channel transmitter with HART/EX (type 707085 according to data sheet 707080), output 4 to 20 mA, (not in conjunction with extra codes 658 or 659, suitable software available for free – Device Type Manager (DTM) for PACTware)
x	869	1 programmable two-channel transmitter with HART/EX/SIL (type 707086 according to data sheet 707080), output 4 to 20 mA, (not in conjunction with extra codes 658 or 659, suitable software available for free – Device Type Manager (DTM) for PACTware)
x	562	Parts in contact with medium with PTFE covering, upon request
x	563	Parts in contact with medium with ECTFE (Halar®) coating, upon request
x	365	Inspection certificate 3.1 DIN EN 10204 insulation resistance
x	367	Inspection certificate 3.1 DIN EN 10204 pressure test
x	368	Inspection certificate 3.1 DIN EN 10204 leak test
x	374	Inspection certificate 3.1 DIN EN 10204 material

Note: For extra code transmitter please specify measuring range and, if applicable, output signal in plain text.

	(1)		(2)		(3)		(4)		(5)		(6)		(7)		(8)		(9)	
Order code		-		-		-		-		-		-		-		/	**362**	, ...[a]
Order example	902820/11	-	415	-	1001	-	1	-	12	-	250	-	104	-	26	/	362	

[a] List extra codes in sequence and separate using commas.

Additional information:
In which zone is the device used?

Caution:
For application in zones 20, 21, and 22, only a terminal head with protection type IP65 is possible.

Note:
The precise Ex identification marking is provided upon delivery on the nameplate and in the operating manual.

The specified operating temperatures are maximum values based on the applied sensing element. Operating temperatures in Ex areas are severely restricted. When determining the respective maximum operating temperature, please consult the operating manual (Chapter 5).

The specified operating temperatures of the thermowell materials are maximum values based on the pressure resistance of the material used. Operating temperatures in Ex areas are severely restricted. When determining the respective maximum operating temperature, please consult the operating manual (Chapter 5).

Due to the complexity of the possible versions, not all variants can be illustrated. Please note that certain combinations cannot be supplied for all categories according to Ex.

JUMO GmbH & Co. KG
Delivery address: Mackenrodtstraße 14
36039 Fulda, Germany
Postal address: 36035 Fulda, Germany
Phone: +49 661 6003-0
Fax: +49 661 6003-607
Email: mail@jumo.net
Internet: www.jumo.net

JUMO UK LTD
JUMO House
Temple Bank, Riverway
Harlow, Essex, CM20 2DY, UK
Phone: +44 1279 63 55 33
Fax: +44 1279 62 50 29
Email: sales@jumo.co.uk
Internet: www.jumo.co.uk

JUMO Process Control, Inc.
6724 Joy Road
East Syracuse, NY 13057, USA
Phone: +1 315 437 5866
Fax: +1 315 437 5860
Email: info.us@jumo.net
Internet: www.jumousa.com

Ⓔx II 1/2 G Ex ia IIC T1...T6 Ga/Gb
Ⓔx II 1/2 D Ex ia IIIC T80 °C...T400 °C Da/Db
Ⓔx II 1/2 G Ex ia/d IIC T1...T6 Ga/Gb
Ⓔx II 1/2 D Ex ia/tb IIIC T80 °C...T400 °C

		(1)	**Basic type**
	902820/20		Push-in RTD temperature probe with continuous protection tube 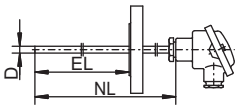
		(2)	**Operating temperature (additional versions upon request)**
x	150		-200 to +600 °C (wire-wound temperature sensor)
x	415		-50 to +600 °C (thin film temperature sensor)
		(3)	**Measuring insert (additional versions upon request)**
x	1001		1× Pt100 in three-wire circuit (not in conjunction with transmitter 331)
x	1003		1× Pt100 in two-wire circuit (not in conjunction with transmitter 331)
x	1011		1× Pt100 in 4-wire circuit
x	2001		2× Pt100 in 3-wire circuit
x	2003		2× Pt100 in two-wire circuit (not in conjunction with transmitter 331)
		(4)	**Tolerance class according to DIN EN 60751:2009 / IEC 60751:2008**
x	1		Class B (standard) (-50 to +500 °C)
x	2		Class A (-30 to +300 °C)
x	3		Class AA (0 to 150 °C)
		(5)	**Protection tube diameter D in mm (additional versions upon request)**
x	9		Ø 9 × 1 mm (for use in zone 0 or 20, upon request)
x	11		Ø 11 × 2 mm
		(6)	**Insertion length EL in mm (EL up to 1000 mm)**
	...		Specification in plain text
		(7)	**Process connection (additional versions upon request)**
x	000		None
x	642		Flange B DN 25/PN 40, DIN EN 1092-1
x	644		Flange B DN 40/PN 40, DIN EN 1092-1
		(8)	**Protection tube material**
x	26		Stainless steel 1.4571
x	60		Titanium, upon request
x	80		Tantalum, upon request
x	81		Inconel, upon request
x	82		HASTELLOY®, upon request
		(9)	**Extra codes**
x	658		SIL and PL compatible (only in conjunction with JUMO SIL-certified safety temperature limiters and monitors according to data sheet 701150, not in conjunction with extra codes 331, 868, and 869)
x	659		SIL and PL compatible (only in conjunction with dTRANS T06 temperature transmitter according to data sheet 707071, not in conjunction with extra codes 331, 868, and 869)
x	**362**		**Ex-protection Ex according to Directive 2014/34/EU (ATEX)**
x	084		CCC certification (only in connection with extra code 362)
x	292		Separation element according to IEC 60079
x	320		Terminal head form BUZ
x	321		Terminal head form BUZH
x	326		Terminal head form KGI-1
x	397		Terminal head form BEGF
x	399		Terminal head form XD-A "Ex D IIC" and "Ex tb IIIC" made from die-cast aluminum
x	541		Terminal head form XD-S "Ex D IIC" and "Ex tb IIIC" made from stainless steel

JUMO GmbH & Co. KG
Delivery address: Mackenrodtstraße 14
36039 Fulda, Germany
Postal address: 36035 Fulda, Germany
Phone: +49 661 6003-0
Fax: +49 661 6003-607
Email: mail@jumo.net
Internet: www.jumo.net

JUMO UK LTD
JUMO House
Temple Bank, Riverway
Harlow, Essex, CM20 2DY, UK
Phone: +44 1279 63 55 33
Fax: +44 1279 62 50 29
Email: sales@jumo.co.uk
Internet: www.jumo.co.uk

JUMO Process Control, Inc.
6724 Joy Road
East Syracuse, NY 13057, USA
Phone: +1 315 437 5866
Fax: +1 315 437 5860
Email: info.us@jumo.net
Internet: www.jumousa.com

x	547	Terminal head form BUZH with LED display
x	924	Terminal head form AB7 with LC plug-in display (only in conjunction with extra code 868 or 869)
x	925	Terminal head form BUZH with LC plug-in display (only in conjunction with extra code 868 or 869)
x	661	LED display Ex "ia" (only in conjunction with extra code 321, 399, or 541)
x	789	LED display Ex "ib" (only in conjunction with extra code 399 or 541)
x	424	Terminal head with M12 machine connector (can only be selected in the case of measuring inserts with max. 4 wires, e.g., 1003, 1011, or 2003)
x	331	1 programmable Ex transmitter (type 707015 according to data sheet 707010), output 4 to 20 mA/20 to 4 mA, (only for measuring insert 1× Pt100, not in conjunction with extra codes 658 or 659, suitable setup program part no. 00605080)
x	868	1 programmable two-channel transmitter with HART/EX (type 707085 according to data sheet 707080), output 4 to 20 mA, (not in conjunction with extra codes 658 or 659, suitable software available for free – Device Type Manager (DTM) for PACTware)
x	869	1 programmable two-channel transmitter with HART/EX/SIL (type 707086 according to data sheet 707080), output 4 to 20 mA, (not in conjunction with extra codes 658 or 659, suitable software available for free – Device Type Manager (DTM) for PACTware)
x	562	Parts in contact with medium with PTFE covering, upon request
x	563	Parts in contact with medium with ECTFE (Halar®) coating, upon request
x	365	Inspection certificate 3.1 DIN EN 10204 insulation resistance
x	367	Inspection certificate 3.1 DIN EN 10204 pressure test
x	368	Inspection certificate 3.1 DIN EN 10204 leak test
x	374	Inspection certificate 3.1 DIN EN 10204 material

Note: For extra code transmitter please specify measuring range and, if applicable, output signal in plain text.

	(1)		(2)		(3)		(4)		(5)		(6)		(7)		(8)		(9)	
Order code		-		-		-		-		-		-		-		/	**362**	, ...[a]
Order example	902820/20	-	415	-	1001	-	1	-	9	-	250	-	642	-	26	/	362	

[a] List extra codes in sequence and separate using commas.

Additional information:
In which zone is the device used?

Caution:
For application in zones 20, 21, and 22, only a terminal head with protection type IP65 is possible.

Note:
The precise Ex identification marking is provided upon delivery on the nameplate and in the operating manual.

The specified operating temperatures are maximum values based on the applied sensing element. Operating temperatures in Ex areas are severely restricted. When determining the respective maximum operating temperature, please consult the operating manual (Chapter 5).

The specified operating temperatures of the thermowell materials are maximum values based on the pressure resistance of the material used. Operating temperatures in Ex areas are severely restricted. When determining the respective maximum operating temperature, please consult the operating manual (Chapter 5).

Due to the complexity of the possible versions, not all variants can be illustrated. Please note that certain combinations cannot be supplied for all categories according to Ex.

JUMO GmbH & Co. KG
Delivery address: Mackenrodtstraße 14
36039 Fulda, Germany
Postal address: 36035 Fulda, Germany
Phone: +49 661 6003-0
Fax: +49 661 6003-607
Email: mail@jumo.net
Internet: www.jumo.net

JUMO UK LTD
JUMO House
Temple Bank, Riverway
Harlow, Essex, CM20 2DY, UK
Phone: +44 1279 63 55 33
Fax: +44 1279 62 50 29
Email: sales@jumo.co.uk
Internet: www.jumo.co.uk

JUMO Process Control, Inc.
6724 Joy Road
East Syracuse, NY 13057, USA
Phone: +1 315 437 5866
Fax: +1 315 437 5860
Email: info.us@jumo.net
Internet: www.jumousa.com

Ⓔx II 1/2 G Ex ia IIC T1...T6 Ga/Gb
Ⓔx II 1/2 D Ex ia IIIC T80 °C...T400 °C Da/Db
Ⓔx II 1/2 G Ex ia/d IIC T1...T6 Ga/Gb
Ⓔx II 1/2 D Ex ia/tb IIIC T80 °C...T400 °C

		(1)	**Basic type**
	902820/21		Push-in RTD temperature probe with reduced protection tube 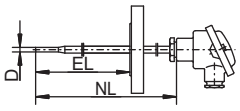
		(2)	**Operating temperature (additional versions upon request)**
x	150		-200 to +600 °C (wire-wound temperature sensor)
x	415		-50 to +600 °C (thin film temperature sensor)
		(3)	**Measuring insert (additional versions upon request)**
x	1001		1× Pt100 in three-wire circuit (not in conjunction with transmitter 331)
x	1003		1× Pt100 in two-wire circuit (not in conjunction with transmitter 331)
x	1011		1× Pt100 in 4-wire circuit
x	2001		2× Pt100 in 3-wire circuit
x	2003		2× Pt100 in two-wire circuit (not in conjunction with transmitter 331)
		(4)	**Tolerance class according to DIN EN 60751:2009 / IEC 60751:2008**
x	1		Class B (standard) (-50 to +500 °C)
x	2		Class A (-30 to +300 °C)
x	3		Class AA (0 to 150 °C)
		(5)	**Protection tube diameter D in mm (additional versions upon request)**
x	12		Ø 12 × 2.5 mm reduced to Ø 9 mm (for use in zone 0 or 20 upon request)
		(6)	**Insertion length EL in mm (EL up to 1000 mm)**
	...		Specification in plain text
		(7)	**Process connection (additional versions upon request)**
x	000		None
x	642		Flange B DN 25/PN 40, DIN EN 1092-1
x	644		Flange B DN 40/PN 40, DIN EN 1092-1
		(8)	**Protection tube material**
x	26		Stainless steel 1.4571
x	60		Titanium, upon request
x	80		Tantalum, upon request
x	81		Inconel, upon request
x	82		HASTELLOY®, upon request
		(9)	**Extra codes**
x	658		SIL and PL compatible (only in conjunction with JUMO SIL-certified safety temperature limiters and monitors according to data sheet 701150, not in conjunction with extra codes 331, 868, and 869)
x	659		SIL and PL compatible (only in conjunction with dTRANS T06 temperature transmitter according to data sheet 707071, not in conjunction with extra codes 331, 868, and 869)
x	**362**		**Ex-protection Ex according to Directive 2014/34/EU (ATEX)**
x	084		CCC certification (only in connection with extra code 362)
x	292		Separation element according to IEC 60079
x	320		Terminal head form BUZ
x	321		Terminal head form BUZH
x	326		Terminal head form KGI-1
x	397		Terminal head form BEGF
x	399		Terminal head form XD-A "Ex D IIC" and "Ex tb IIIC" made from die-cast aluminum
x	541		Terminal head form XD-S "Ex D IIC" and "Ex tb IIIC" made from stainless steel
x	547		Terminal head form BUZH with LED display

JUMO GmbH & Co. KG
Delivery address: Mackenrodtstraße 14
36039 Fulda, Germany
Postal address: 36035 Fulda, Germany
Phone: +49 661 6003-0
Fax: +49 661 6003-607
Email: mail@jumo.net
Internet: www.jumo.net

JUMO UK LTD
JUMO House
Temple Bank, Riverway
Harlow, Essex, CM20 2DY, UK
Phone: +44 1279 63 55 33
Fax: +44 1279 62 50 29
Email: sales@jumo.co.uk
Internet: www.jumo.co.uk

JUMO Process Control, Inc.
6724 Joy Road
East Syracuse, NY 13057, USA
Phone: +1 315 437 5866
Fax: +1 315 437 5860
Email: info.us@jumo.net
Internet: www.jumousa.com

x	924	Terminal head form AB7 with LC plug-in display (only in conjunction with extra code 868 or 869)
x	925	Terminal head form BUZH with LC plug-in display (only in conjunction with extra code 868 or 869)
x	661	LED display Ex "ia" (only in conjunction with extra code 321, 399, or 541)
x	789	LED display Ex "ib" (only in conjunction with extra code 399 or 541)
x	424	Terminal head with M12 machine connector (can only be selected in the case of measuring inserts with max. 4 wires, e.g., 1003, 1011, or 2003)
x	331	1 programmable Ex transmitter (type 707015 according to data sheet 707010), output 4 to 20 mA/20 to 4 mA, (only for measuring insert 1× Pt100, not in conjunction with extra codes 658 or 659, suitable setup program part no. 00605080)
x	868	1 programmable two-channel transmitter with HART/EX (type 707085 according to data sheet 707080), output 4 to 20 mA, (not in conjunction with extra codes 658 or 659, suitable software available for free – Device Type Manager (DTM) for PACTware)
x	869	1 programmable two-channel transmitter with HART/EX/SIL (type 707086 according to data sheet 707080), output 4 to 20 mA, (not in conjunction with extra codes 658 or 659, suitable software available for free – Device Type Manager (DTM) for PACTware)
x	562	Parts in contact with medium with PTFE covering, upon request
x	563	Parts in contact with medium with ECTFE (Halar®) coating, upon request
x	365	Inspection certificate 3.1 DIN EN 10204 insulation resistance
x	367	Inspection certificate 3.1 DIN EN 10204 pressure test
x	368	Inspection certificate 3.1 DIN EN 10204 leak test
x	374	Inspection certificate 3.1 DIN EN 10204 material

Note: For extra code transmitter please specify measuring range and, if applicable, output signal in plain text.

	(1)		(2)		(3)		(4)		(5)		(6)		(7)		(8)		(9)	
Order code		-		-		-		-		-		-		-		/	**362**	, ...[a]
Order example	902820/21	-	415	-	1001	-	1	-	12	-	250	-	642	-	26	/	362	

[a] List extra codes in sequence and separate using commas.

Additional information:
In which zone is the device used?

Caution:
For application in zones 20, 21, and 22, only a terminal head with protection type IP65 is possible.

Note:
The precise Ex identification marking is provided upon delivery on the nameplate and in the operating manual.

The specified operating temperatures are maximum values based on the applied sensing element. Operating temperatures in Ex areas are severely restricted. When determining the respective maximum operating temperature, please consult the operating manual (Chapter 5).

The specified operating temperatures of the thermowell materials are maximum values based on the pressure resistance of the material used. Operating temperatures in Ex areas are severely restricted. When determining the respective maximum operating temperature, please consult the operating manual (Chapter 5).

Due to the complexity of the possible versions, not all variants can be illustrated. Please note that certain combinations cannot be supplied for all categories according to Ex.

JUMO GmbH & Co. KG
Delivery address: Mackenrodtstraße 14
36039 Fulda, Germany
Postal address: 36035 Fulda, Germany
Phone: +49 661 6003-0
Fax: +49 661 6003-607
Email: mail@jumo.net
Internet: www.jumo.net

JUMO UK LTD
JUMO House
Temple Bank, Riverway
Harlow, Essex, CM20 2DY, UK
Phone: +44 1279 63 55 33
Fax: +44 1279 62 50 29
Email: sales@jumo.co.uk
Internet: www.jumo.co.uk

JUMO Process Control, Inc.
6724 Joy Road
East Syracuse, NY 13057, USA
Phone: +1 315 437 5866
Fax: +1 315 437 5860
Email: info.us@jumo.net
Internet: www.jumousa.com

Ⓔx II 1/2 G Ex ia IIC T1...T6 Ga/Gb
Ⓔx II 1/2 D Ex ia IIIC T80 °C...T400 °C Da/Db
Ⓔx II 1/2 G Ex ia/d IIC T1...T6 Ga/Gb
Ⓔx II 1/2 D Ex ia/tb IIIC T80 °C...T400 °C

		(1)	**Basic type**
	902820/50		Screw-in RTD temperature probe with thermowell DIN 43772, form 4 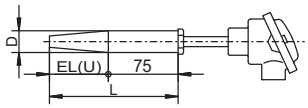
		(2)	**Operating temperature (additional versions upon request, for restrictions see DIN 43772)**
x	150		-200 to +600 °C (wire-wound temperature sensor)
x	415		-50 to +600 °C (thin film temperature sensor)
		(3)	**Measuring insert (additional versions upon request)**
x	1001		1× Pt100 in three-wire circuit (not in conjunction with transmitter 331)
x	1003		1× Pt100 in two-wire circuit (not in conjunction with transmitter 331)
x	1011		1× Pt100 in 4-wire circuit
x	2001		2× Pt100 in 3-wire circuit
x	2003		2× Pt100 in two-wire circuit (not in conjunction with transmitter 331)
		(4)	**Tolerance class according to DIN EN 60751:2009 / IEC 60751:2008**
x	1		Class B (standard) (-50 to +500 °C)
x	2		Class A (-30 to +300 °C)
x	3		Class AA (0 to 150 °C)
		(5)	**Thermowell diameter D in mm (additional versions upon request)**
x	24		Ø 24 mm reduced to Ø 12.5 mm
		(6)	**Thermowell dimensions (insertion length/total length)**
x	65		65 mm/140 mm (previously form D1 according to DIN 43767)
x	125		125 mm/200 mm (previously form D2 according to DIN 43767)
	...		Upon request (Code: U + L)
		(7)	**Thermowell material**
x	26		Stainless steel 1.4571 (operating temperature 600 °C)
x	36		Steel 1.7335 (operating temperature 540 °C)
		(8)	**Protection tube material**
x	26		Stainless steel 1.4571
		(9)	**Extra codes**
x	658		SIL and PL compatible (only in conjunction with JUMO SIL-certified safety temperature limiters and monitors according to data sheet 701150, not in conjunction with extra codes 331, 868, and 869)
x	659		SIL and PL compatible (only in conjunction with dTRANS T06 temperature transmitter according to data sheet 707071, not in conjunction with extra codes 331, 868, and 869)
x	**362**		**Ex-protection Ex according to Directive 2014/34/EU (ATEX)**
x	084		CCC certification (only in connection with extra code 362)
x	292		Separation element according to IEC 60079
x	320		Terminal head form BUZ
x	321		Terminal head form BUZH
x	326		Terminal head form KGI-1
x	397		Terminal head form BEGF
x	399		Terminal head form XD-A "Ex D IIC" and "Ex tb IIIC" made from die-cast aluminum
x	541		Terminal head form XD-S "Ex D IIC" and "Ex tb IIIC" made from stainless steel
x	547		Terminal head form BUZH with LED display
x	924		Terminal head form AB7 with LC plug-in display (only in conjunction with extra code 868 or 869)
x	925		Terminal head form BUZH with LC plug-in display (only in conjunction with extra code 868 or 869)
x	661		LED display Ex "ia" (only in conjunction with extra code 321, 399, or 541)

JUMO GmbH & Co. KG
Delivery address: Mackenrodtstraße 14
36039 Fulda, Germany
Postal address: 36035 Fulda, Germany
Phone: +49 661 6003-0
Fax: +49 661 6003-607
Email: mail@jumo.net
Internet: www.jumo.net

JUMO UK LTD
JUMO House
Temple Bank, Riverway
Harlow, Essex, CM20 2DY, UK
Phone: +44 1279 63 55 33
Fax: +44 1279 62 50 29
Email: sales@jumo.co.uk
Internet: www.jumo.co.uk

JUMO Process Control, Inc.
6724 Joy Road
East Syracuse, NY 13057, USA
Phone: +1 315 437 5866
Fax: +1 315 437 5860
Email: info.us@jumo.net
Internet: www.jumousa.com

x	789	LED display Ex "ib" (only in conjunction with extra code 399 or 541)
x	424	Terminal head with M12 machine connector (can only be selected in the case of measuring inserts with max. 4 wires, e.g., 1003, 1011, or 2003)
x	331	1 programmable Ex transmitter (type 707015 according to data sheet 707010), output 4 to 20 mA/20 to 4 mA, (only for measuring insert 1× Pt100, not in conjunction with extra codes 658 or 659, suitable setup program part no. 00605080)
x	868	1 programmable two-channel transmitter with HART/EX (type 707085 according to data sheet 707080), output 4 to 20 mA, (not in conjunction with extra codes 658 or 659, suitable software available for free – Device Type Manager (DTM) for PACTware)
x	869	1 programmable two-channel transmitter with HART/EX/SIL (type 707086 according to data sheet 707080), output 4 to 20 mA, (not in conjunction with extra codes 658 or 659, suitable software available for free – Device Type Manager (DTM) for PACTware)
x	562	Parts in contact with medium with PTFE covering, upon request
x	563	Parts in contact with medium with ECTFE (Halar®) coating, upon request
x	365	Inspection certificate 3.1 DIN EN 10204 insulation resistance
x	367	Inspection certificate 3.1 DIN EN 10204 pressure test
x	368	Inspection certificate 3.1 DIN EN 10204 leak test
x	374	Inspection certificate 3.1 DIN EN 10204 material

Note: For extra code transmitter please specify measuring range and, if applicable, output signal in plain text.

	(1)		(2)		(3)		(4)		(5)		(6)		(7)		(8)		(9)	
Order code		-		-		-		-		-		-		-		/	**362**	, ...[a]
Order example	902820/50	-	415	-	1001	-	1	-	24	-	65	-	26	-	26	/	362	

[a] List extra codes in sequence and separate using commas.

Additional information:
In which zone is the device used?

Caution:
For application in zones 20, 21, and 22, only a terminal head with protection type IP65 is possible.

Note:
The precise Ex identification marking is provided upon delivery on the nameplate and in the operating manual.

The specified operating temperatures are maximum values based on the applied sensing element. Operating temperatures in Ex areas are severely restricted. When determining the respective maximum operating temperature, please consult the operating manual (Chapter 5).

The specified operating temperatures of the thermowell materials are maximum values based on the pressure resistance of the material used. Operating temperatures in Ex areas are severely restricted. When determining the respective maximum operating temperature, please consult the operating manual (Chapter 5).

Due to the complexity of the possible versions, not all variants can be illustrated. Please note that certain combinations cannot be supplied for all categories according to Ex.

JUMO GmbH & Co. KG
Delivery address: Mackenrodtstraße 14
36039 Fulda, Germany
Postal address: 36035 Fulda, Germany
Phone: +49 661 6003-0
Fax: +49 661 6003-607
Email: mail@jumo.net
Internet: www.jumo.net

JUMO UK LTD
JUMO House
Temple Bank, Riverway
Harlow, Essex, CM20 2DY, UK
Phone: +44 1279 63 55 33
Fax: +44 1279 62 50 29
Email: sales@jumo.co.uk
Internet: www.jumo.co.uk

JUMO Process Control, Inc.
6724 Joy Road
East Syracuse, NY 13057, USA
Phone: +1 315 437 5866
Fax: +1 315 437 5860
Email: info.us@jumo.net
Internet: www.jumousa.com

Ⓔx II 1/2 G Ex ia IIC T1...T6 Ga/Gb
Ⓔx II 1/2 D Ex ia IIIC T80 °C...T400 °C Da/Db
Ⓔx II 1/2 G Ex ia/d IIC T1...T6 Ga/Gb
Ⓔx II 1/2 D Ex ia/tb IIIC T80 °C...T400 °C

		(1)	**Basic type**
	902820/51		Screw-in RTD temperature probe with thermowell DIN 43772, form 4 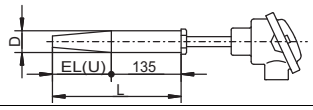
		(2)	**Operating temperature (additional versions upon request, for restrictions see DIN 43772)**
x	150		-200 to +600 °C (wire-wound temperature sensor)
x	415		-50 to +600 °C (thin film temperature sensor)
		(3)	**Measuring insert (additional versions upon request)**
x	1001		1× Pt100 in three-wire circuit (not in conjunction with transmitter 331)
x	1003		1× Pt100 in two-wire circuit (not in conjunction with transmitter 331)
x	1011		1× Pt100 in 4-wire circuit
x	2001		2× Pt100 in 3-wire circuit
x	2003		2× Pt100 in two-wire circuit (not in conjunction with transmitter 331)
		(4)	**Tolerance class according to DIN EN 60751:2009 / IEC 60751:2008**
x	1		Class B (standard) (-50 to +500 °C)
x	2		Class A (-30 to +300 °C)
x	3		Class AA (0 to 150 °C)
		(5)	**Thermowell diameter D in mm (additional versions upon request)**
x	24		Ø 24 mm reduced to Ø 12.5 mm
		(6)	**Thermowell dimensions (insertion length/total length)**
x	65		65 mm/200 mm (previously form D4 according to DIN 43767)
x	125		125 mm/200 mm (previously form D2 according to DIN 43767)
	...		Upon request (Code: U + L)
		(7)	**Thermowell material**
x	26		Stainless steel 1.4571 (operating temperature 600 °C)
x	36		Steel 1.7335 (operating temperature 540 °C)
		(8)	**Protection tube material**
x	26		Stainless steel 1.4571
		(9)	**Extra codes**
x	658		SIL and PL compatible (only in conjunction with JUMO SIL-certified safety temperature limiters and monitors according to data sheet 701150, not in conjunction with extra codes 331, 868, and 869)
x	659		SIL and PL compatible (only in conjunction with dTRANS T06 temperature transmitter according to data sheet 707071, not in conjunction with extra codes 331, 868, and 869)
x	**362**		**Ex-protection Ex according to Directive 2014/34/EU (ATEX)**
x	084		CCC certification (only in connection with extra code 362)
x	292		Separation element according to IEC 60079
x	320		Terminal head form BUZ
x	321		Terminal head form BUZH
x	326		Terminal head form KGI-1
x	397		Terminal head form BEGF
x	399		Terminal head form XD-A "Ex D IIC" and "Ex tb IIIC" made from die-cast aluminum
x	541		Terminal head form XD-S "Ex D IIC" and "Ex tb IIIC" made from stainless steel
x	547		Terminal head form BUZH with LED display
x	924		Terminal head form AB7 with LC plug-in display (only in conjunction with extra code 868 or 869)
x	925		Terminal head form BUZH with LC plug-in display (only in conjunction with extra code 868 or 869)
x	661		LED display Ex "ia" (only in conjunction with extra code 321, 399, or 541)
x	789		LED display Ex "ib" (only in conjunction with extra code 399 or 541)

JUMO GmbH & Co. KG
Delivery address: Mackenrodtstraße 14
36039 Fulda, Germany
Postal address: 36035 Fulda, Germany
Phone: +49 661 6003-0
Fax: +49 661 6003-607
Email: mail@jumo.net
Internet: www.jumo.net

JUMO UK LTD
JUMO House
Temple Bank, Riverway
Harlow, Essex, CM20 2DY, UK
Phone: +44 1279 63 55 33
Fax: +44 1279 62 50 29
Email: sales@jumo.co.uk
Internet: www.jumo.co.uk

JUMO Process Control, Inc.
6724 Joy Road
East Syracuse, NY 13057, USA
Phone: +1 315 437 5866
Fax: +1 315 437 5860
Email: info.us@jumo.net
Internet: www.jumousa.com

x	424	Terminal head with M12 machine connector (can only be selected in the case of measuring inserts with max. 4 wires, e.g., 1003, 1011, or 2003)
x	331	1 programmable Ex transmitter (type 707015 according to data sheet 707010), output 4 to 20 mA/20 to 4 mA, (only for measuring insert 1× Pt100, not in conjunction with extra codes 658 or 659, suitable setup program part no. 00605080)
x	868	1 programmable two-channel transmitter with HART/EX (type 707085 according to data sheet 707080), output 4 to 20 mA, (not in conjunction with extra codes 658 or 659, suitable software available for free – Device Type Manager (DTM) for PACTware)
x	869	1 programmable two-channel transmitter with HART/EX/SIL (type 707086 according to data sheet 707080), output 4 to 20 mA, (not in conjunction with extra codes 658 or 659, suitable software available for free – Device Type Manager (DTM) for PACTware)
x	562	Parts in contact with medium with PTFE covering, upon request
x	563	Parts in contact with medium with ECTFE (Halar®) coating, upon request
x	365	Inspection certificate 3.1 DIN EN 10204 insulation resistance
x	367	Inspection certificate 3.1 DIN EN 10204 pressure test
x	368	Inspection certificate 3.1 DIN EN 10204 leak test
x	374	Inspection certificate 3.1 DIN EN 10204 material

Note: For extra code transmitter please specify measuring range and, if applicable, output signal in plain text.

	(1)		(2)		(3)		(4)		(5)		(6)		(7)		(8)		(9)	
Order code		-		-		-		-		-		-		-		/	**362**	, ...[a]
Order example	902820/51	-	415	-	1001	-	1	-	24	-	65	-	26	-	26	/	362	

[a] List extra codes in sequence and separate using commas.

Additional information:
In which zone is the device used?

Caution:
For application in zones 20, 21, and 22, only a terminal head with protection type IP65 is possible.

Note:
The precise Ex identification marking is provided upon delivery on the nameplate and in the operating manual.

The specified operating temperatures are maximum values based on the applied sensing element. Operating temperatures in Ex areas are severely restricted. When determining the respective maximum operating temperature, please consult the operating manual (Chapter 5).

The specified operating temperatures of the thermowell materials are maximum values based on the pressure resistance of the material used. Operating temperatures in Ex areas are severely restricted. When determining the respective maximum operating temperature, please consult the operating manual (Chapter 5).

Due to the complexity of the possible versions, not all variants can be illustrated. Please note that certain combinations cannot be supplied for all categories according to Ex.

JUMO GmbH & Co. KG
Delivery address: Mackenrodtstraße 14
36039 Fulda, Germany
Postal address: 36035 Fulda, Germany
Phone: +49 661 6003-0
Fax: +49 661 6003-607
Email: mail@jumo.net
Internet: www.jumo.net

JUMO UK LTD
JUMO House
Temple Bank, Riverway
Harlow, Essex, CM20 2DY, UK
Phone: +44 1279 63 55 33
Fax: +44 1279 62 50 29
Email: sales@jumo.co.uk
Internet: www.jumo.co.uk

JUMO Process Control, Inc.
6724 Joy Road
East Syracuse, NY 13057, USA
Phone: +1 315 437 5866
Fax: +1 315 437 5860
Email: info.us@jumo.net
Internet: www.jumousa.com

Accessories

Accessories for programmable two-wire transmitter, type 707010

Designation	Part no.
PC interface with USB/TTL converter	00456352
Special programming (standard measuring range 0 to 100 °C)	-
Setup program on CD-ROM, multilingual	00605080

Accessories for programmable two-wire transmitter, type 707050

Designation	Part no.
Setup program on CD-ROM, multilingual	00574959
USB cable, type A USB connector on Mini-B USB connector, length 3 m	00506252

Accessories for programmable Wtrans B head transmitter with wireless data transmission, type 707060

Designation	Part no.
Lithium battery 3.6 V, 2.2 Ah (size AA)	00547559
PC interface with USB/TTL converter	00456352
Setup program on CD-ROM, multilingual	00488887
Setup program including OnlineChart on CD-ROM, multilingual	00549067
OnlineChart activation	00549188

Accessories for programmable two-channel transmitter with HART®, type 707080 or programmable two-channel transmitter with HART®/SIL, type 707081

Designation	Part no.
HART® modem USB	00443447
JUMO dTRANS T07 B 707080 – Device Type Manager (DTM) software program	00687789

Trademark information

- HART® is a registered trademark of FieldComm Group Inc., Austin, TX 78759, US.