Automation

Temperature, Control, Monitoring

General information

Stock service

To be able to supply you with the required goods as soon as possible we have got an extensive warehouse with finished and preassembled devices. These stock versions have got a P/N or are marked with ●.
These versions can also be ordered directly via our online shop.

Delivery time for stock versions

The stock versions will be dispatched within three working days after receipt of order. But these stock versions are subject to prior sale.
In such cases we will send you an order confirmation with statement of delivery schedule.

Partial delivery

If your order includes devices of both delivery groups, unless otherwise indicated, you will receive the devices in one consignment.

Dispatch

The consignment is dispatched via parcel service or forwarder.
Another delivery mode shall be subject to prior agreement.

Pricing

The prices in this catalogue are valid from 01.01.2020.
Our prices are calculated ex works, excluding packaging, including statutory value-added tax.
In the event of price changes the prices stated in our price catalogue valid on the delivery day are binding.
Furthermore please refer to our "General Terms and Conditions of of Delivery and Services".

Minimum order value

For stock versions:	150.00 EUR
For manufactured versions:	300.00 EUR
For special versions:	on request

Handling fee

For orders of spare parts and accessories < 100.00 EUR:	25.00 EUR

Liability

The product details mentioned in our documents are based on our development and construction work and on our application-specific experiences.
The technical data and specifications are descended from the best of our knowledge.
But we reserve the right to realize technical changes based on any enhancements.
Furthermore we assume no liability beside the individual contract concluded.

General Terms and Conditions of Delivery and Service

Our current version of the Terms and Conditions of Delivery and Services can be downloaded by clicking the following link on our website:
http://agb.jumo-en.info

JUMO GmbH & Co. KG
Delivery address: Mackenrodtstraße 14
36039 Fulda, Germany
Postal address: 36035 Fulda, Germany
Phone: +49 661 6003-0
Fax: +49 661 6003-607
E-mail: mail@jumo.net
Internet: www.jumo.net

JUMO Instrument Co. Ltd.
JUMO House
Temple Bank, Riverway
Harlow, Essex CM20 2DY, UK
Phone: +44 1279 635533
Fax: +44 1279 635262
E-mail: sales@jumo.co.uk
Internet: www.jumo.co.uk

JUMO Process Control, Inc.
6733 Myers Road
East Syracuse, NY 13057, USA
Phone: 315-437-5866
1-800-554-5866
Fax: 315-437-5860
E-mail: info.us@jumo.net
Internet: www.jumousa.com

Flue gas temperature monitor

Type STM-RW-2

Special features

- with micro switch
- Aluminum die cast case
- Protection rating IP54
- High contact reliability

Brief description

The flue gas temperature monitor is used to monitor the flue gas temperature of solid fuel boilers during bivalent operation with oil heating boilers. Furthermore it is used to block ventilation systems causing vacuum in connection with tile stoves and fireplaces.

The flue gas temperature monitor operates according to the rod expansion principle. The immersion tube and an integrated metal rod have different expansion coefficients so that a temperature-dependent length difference occurs. A micro switch, which is actuated when a set limit value temperature is exceeded, is affected due to mechanical transmission. The micro switch is reset once the immersion tube has cooled down by approx. 10-30 K. In the event of an immersion tube breakage, the current circuit will be permanently opened.

Approval / approval marks (see Technical Data)

V2.00/EN/00073204

JUMO GmbH & Co. KG
Delivery address: Mackenrodtstraße 14
36039 Fulda, Germany
Postal address: 36035 Fulda, Germany
Phone: +49 661 6003-0
Fax: +49 661 6003-607
E-mail: mail@jumo.net
Internet: www.jumo.net

JUMO Instrument Co. Ltd.
JUMO House
Temple Bank, Riverway
Harlow, Essex CM20 2DY, UK
Phone: +44 1279 635533
Fax: +44 1279 635262
E-mail: sales@jumo.co.uk
Internet: www.jumo.co.uk

JUMO Process Control, Inc.
6733 Myers Road
East Syracuse, NY 13057, USA
Phone: 315-437-5866
1-800-554-5866
Fax: 315-437-5860
E-mail: info.us@jumo.net
Internet: www.jumousa.com

Technical data

Electrical data	STM-RW-2	STM-RW-2/OS (729)
Switching element	Micro switch with change-over contact	Micro switch with 2 separate current circuits 1 x N/C contact and 1 x N/O contact
maximum permissible contact rating	AC 230 V +10%, 10 (2) A, cos φ = 1 (0.6) DC 230 V +10%, 0.25A	
Contact reliability	To ensure high switching reliability, we recommend a minimum load of: AC / DC 24 V, 20 mA	
Rating surge voltage	2500 V (via the switching contacts 400 V)	
Overvoltage category II	Required fusing, see maximum switching current	

Operating data

Limit value range	+40 °C to +120 °C (factory-set to +100 °C) +20 °C to +400 °C (factory-set to +120 °C)		
Hysteresis	Limit value range	STM-RW-2	STM-RW-2/OS (729)
	+40 °C to +120 °C +20 °C to +400 °C	10 - 18 K 10 - 22 K	10 - 30 K 10 - 40 K
Switching point accuracy referring to the switch-off point	Limit value range	Scale beginning	Scale end
	+40 °C to +120 °C +20 °C to +400 °C	+0/-10 K +0/-15 K	+0/-10 K +0/-20 K
Time constant	Flue gas: ≤ 45 sec.		
Average ambient temperature influence	Switching point offset referring to the deviation of +22 °C ~ 0.07 K/K		

Temperatures / Position	STM-RW-2	
Permissible ambient temperature	on the probe: on the switch head:	max. +700 °C max. +80 °C, min. -50 °C
Set point adjustment	after removal of the case lid via internal scale	
Permissible storage temperature	max. +80 °C / min. -50 °C	
Rated position	as per DIN 16257, NL 0 to NL 90 (different rated positions (NL) on request)	

Case

Case	Aluminum die cast, surface with impact resistant textured paint; lid: RAL 7032, bottom section: RAL 7015
Cable inlet	clamping gland M 20 × 1.5
Protection class	EN 60 529-IP54
Weight	approx. 0.8 kg

Process connection

Connection type	"DZ“ G 1/2 (fixed hexagon with external thread G 1/2), material: Steel
Immersion tube	15 x 150 mm, Material: Steel

Approvals/Approval marks

Approval marks	Inspection authority	Certificates / Inspection number	Inspection basics	valid for
DIN EN 14597	DIN CERTCO / TÜV Süd	ATW 862	DIN EN 14597	STM-RW-2
EAC[a]	Gost Norm AG	TC RU C-DE.AB98.B.00348	Technical rules of the customs union Russia/Belarus/ Kazakhstan	STM-RW-2

[a] Russian documentation upon request

JUMO GmbH & Co. KG
Delivery address: Mackenrodtstraße 14
36039 Fulda, Germany
Postal address: 36035 Fulda, Germany
Phone: +49 661 6003-0
Fax: +49 661 6003-607
E-mail: mail@jumo.net
Internet: www.jumo.net

JUMO Instrument Co. Ltd.
JUMO House
Temple Bank, Riverway
Harlow, Essex CM20 2DY, UK
Phone: +44 1279 635533
Fax: +44 1279 635262
E-mail: sales@jumo.co.uk
Internet: www.jumo.co.uk

JUMO Process Control, Inc.
6733 Myers Road
East Syracuse, NY 13057, USA
Phone: 315-437-5866
1-800-554-5866
Fax: 315-437-5860
E-mail: info.us@jumo.net
Internet: www.jumousa.com

Dimensions

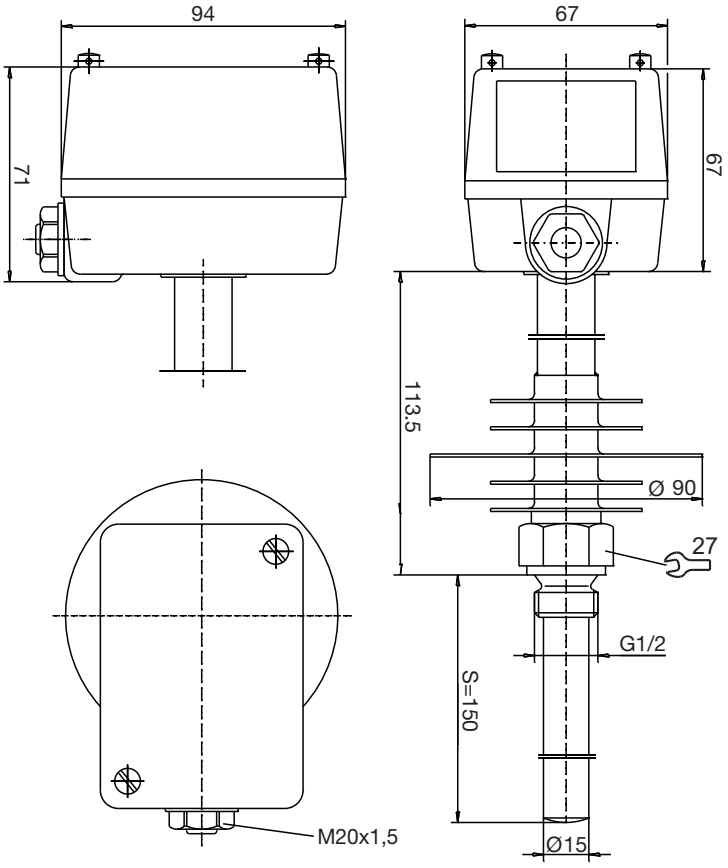

Wiring diagram

STM-RW-2

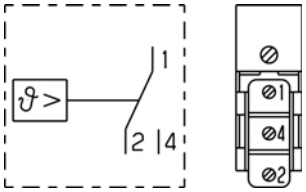

STM-RW-2/OS
(729)

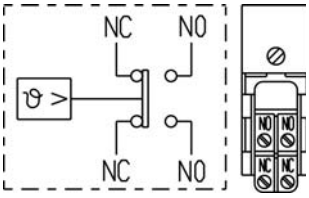

JUMO GmbH & Co. KG
Delivery address: Mackenrodtstraße 14
36039 Fulda, Germany
Postal address: 36035 Fulda, Germany
Phone: +49 661 6003-0
Fax: +49 661 6003-607
E-mail: mail@jumo.net
Internet: www.jumo.net

JUMO Instrument Co. Ltd.
JUMO House
Temple Bank, Riverway
Harlow, Essex CM20 2DY, UK
Phone: +44 1279 635533
Fax: +44 1279 635262
E-mail: sales@jumo.co.uk
Internet: www.jumo.co.uk

JUMO Process Control, Inc.
6733 Myers Road
East Syracuse, NY 13057, USA
Phone: 315-437-5866
1-800-554-5866
Fax: 315-437-5860
E-mail: info.us@jumo.net
Internet: www.jumousa.com

Stock versions

Part No.	Type	Range °C	Hysteresis K	Thread of process connection	Fitting length mm
60000903	STM-RW-2	+40 to +120	10-18	DZ G 1/2	150
60000904	STM-RW-2/OS	+40 to +120	10-30		
60001115	STM-RW-2	+20 to +400 Adjusted point +120	10-22		

Order specifications

Order code		
	(1)	**Model**
601540		STM-RW-2 exhaust gas temperature monitor (ATW)
	(2)	**Range**
045		+40 to +400 °C
056		+40 to +120 °C
	(3)	**Switching differential**
00		without switching differential
	(4)	**Process connection**
48		DZ G 1/2 solid hexagon w. outer thread
	(5)	**Thread of process connection**
13		G 1/2
	(6)	**Material of process connection**
01		Steel
	(7)	**Fitting length**
150		150 mm
	(8)	**Diameter of immersion tube**
15		15 mm
	(9)	**Extra code**
729		Microswitch with 2 separate circuits

	(1)		(2)		(3)		(4)		(5)		(6)		(7)		(8)		(9)
Order code	601540	/		-		-		-		-		-		-		/	
Order example	601540	/	056	-	00	-	48	-	13	-	01	-	150	-	15	/	729

JUMO GmbH & Co. KG
Delivery address: Mackenrodtstraße 14
36039 Fulda, Germany
Postal address: 36035 Fulda, Germany
Phone: +49 661 6003-0
Fax: +49 661 6003-607
Email: mail@jumo.net
Internet: www.jumo.net

JUMO Instrument Co. Ltd.
JUMO House
Temple Bank, Riverway
Harlow, Essex, CM20 2DY, UK
Phone: +44 1279 63 55 33
Fax: +44 1279 62 50 29
Email: sales@jumo.co.uk
Internet: www.jumo.co.uk

JUMO Process Control, Inc.
6724 Joy Road
East Syracuse, NY 13057, USA
Phone: +1 315 437 5866
Fax: +1 315 437 5860
Email: info.us@jumo.net
Internet: www.jumousa.com

Panel-Mounted Thermostats ETH

Special features

- Self-monitoring (STB/STW [STB]) and safety cut-out (STB/STW [STB]) in the event of a pressure drop
- Version according to DIN EN 14597 and to Pressure Equipment Directive 2014/68/EU
- Microswitch

ETH-20 (Type 602010/20-...)

Brief description

Panel-mounted thermostats ETH monitor thermal processes. The devices are available as safetytemperature monitors STW (STB) and safety temperature limiters STB. In the event of a malfunction, the STB switches the monitored machine to a safe operating status.

Panel-mounted thermostats operate according to the fluid expansion principle. A microswitch is used as an electrical switching element.

Switching functions

Safety temperature monitor STW
If the temperature on the temperature probe exceeds the limit value, the electrical circuit is opened by a microswitch. When the limit value falls below the set limit value (by the switching differential), the switch is returned to its initial position.

Restart lock at safety temperature limiter STB
If the temperature at the temperature sensor exceeds the set limit value, the electrical circuit is opened and the microswitch is mechanically locked. After falling below the limit value by approx. 10 % of the temperature range (approx. 15 % of the limit value setting > +350 °C), the switch can be unlocked manually.

Use of the safety temperature monitor STW as safety temperature limiter STB
In this case, the circuit following the thermostat must comply with DIN EN 14597 and VDE 0116.

Self-monitoring for safety temperature limiter STB and safety temperature monitor STW (STB)
If the measuring system is destroyed (i.e. if the expansion fluid escapes) the pressure in the membrane of the STB and STW (STB) drops and permanently opens the electrical circuit. Unlocking is then no longer possible. When the STW (STB) and STB sensors cools down to the negative temperature range, the circuit opens, but must be unlocked manually by the reclosing button when the temperature rises. The STW (STB) restarts automatically.

ETH-70 (Type 602010/70-...)

Approvals and approval marks (see technical data)

JUMO GmbH & Co. KG
Delivery address: Mackenrodtstraße 14
36039 Fulda, Germany
Postal address: 36035 Fulda, Germany
Phone: +49 661 6003-0
Fax: +49 661 6003-607
Email: mail@jumo.net
Internet: www.jumo.net

JUMO Instrument Co. Ltd.
JUMO House
Temple Bank, Riverway
Harlow, Essex, CM20 2DY, UK
Phone: +44 1279 63 55 33
Fax: +44 1279 62 50 29
Email: sales@jumo.co.uk
Internet: www.jumo.co.uk

JUMO Process Control, Inc.
6724 Joy Road
East Syracuse, NY 13057, USA
Phone: +1 315 437 5866
Fax: +1 315 437 5860
Email: info.us@jumo.net
Internet: www.jumousa.com

Technical data

Control ranges and temperature probes

	Liquid-filled				
Switching function	Control/limit value ranges °C	Max. admissible excessive probe temperature °C	Max. capillary length mm	Length of the temperature probe Probe-Ø „d“ = 6 mm[a] mm	
				Ø 6	Ø 8
STW, STB	30 to 110	135	5,000	108	75
	60 to 130	150		116	79
	20 to 150	175		77	60
	50 to 250	290		64	49
	50 to 300	345		55	-

	Gas-filled				
STW, STB	20 to 400	460	1,000	176	106
	20 to 500	575	2,000	127	81
	20 to 500	575	4,000	202	119

[a] Standard

Capillary and temperature probe

Type	Scale limit value	Capillary	Temperature probe
ETH-..	up to 200 °C	Copper (Cu), Ø 1.5 mm, material no. 2.0090	Copper (Cu), material no. 2.0090, hard soldered
	up to 350 °C	Copper (Cu), Ø 1.5 mm, material no. 2.0090	Stainless steel (CrNi), Ø 1.5 mm, material no. 1.4571
	up to 500 °C	Stainless steel (CrNi), Ø 1.5 mm	Stainless steel (CrNi), Ø 1.5 mm, material no. 1.4571
	up to 350 °C	Stainless steel (CrNi), Ø 1.5 mm	Stainless steel (CrNi), Ø 1.5 mm, material no. 1.4571 (extra cost)
Capillary length	Standard length: 1,000 mm, max. 5,000 mm		
Min. bending radius of the capillary	5 mm		

Electrical data

Switching function	STW (-20)	STB (-70)	STB (-70/U)
	Microswitch with changeover contact	Microswitch with NC contact and restart lock	Microswith with NC contact, restart lock and additional signal contact
Max. switching capacity	AC 230 V +10 %, 10 (2)[a] A, cos φ = 1 (0.6)[a], DC 230 V +10 %, 0.25 A		
with switching differential 2 %	AC 230 V +10 %, 6 (1.2)[a] A, cos φ = 1 (0.6)[a]	-	-
	Microswitch with gold-plated contacts, extra code 702, AC/DC 24 V, 0.1 A, contact resistance 2.5 to 10 mΩ		

[a] Inductive loads

Contact reliability	To ensure a high switching reliability, we recommend a minimum load of:
with silver contacts	AC/DC = 24 V, 100 mA
with gold-plated contacts (extra code 702)	AC/DC = 10 V, 5 mA

JUMO GmbH & Co. KG
Delivery address: Mackenrodtstraße 14
36039 Fulda, Germany
Postal address: 36035 Fulda, Germany
Phone: +49 661 6003-0
Fax: +49 661 6003-607
Email: mail@jumo.net
Internet: www.jumo.net

JUMO Instrument Co. Ltd.
JUMO House
Temple Bank, Riverway
Harlow, Essex, CM20 2DY, UK
Phone: +44 1279 63 55 33
Fax: +44 1279 62 50 29
Email: sales@jumo.co.uk
Internet: www.jumo.co.uk

JUMO Process Control, Inc.
6724 Joy Road
East Syracuse, NY 13057, USA
Phone: +1 315 437 5866
Fax: +1 315 437 5860
Email: info.us@jumo.net
Internet: www.jumousa.com

Environmental influences

Switching differential in % from the control/limit value range	Nominal value	Poss. actual value	Nominal value	Poss. actual value	
	Liquid-filled		Gas-filled		
Switching function STW, STB	5	4 max. 6	7	5 max. 12	(Standard)
	9	8 max. 11	9	8 max. 16	(upon request)
	2	1 max. 3	2	1.5 max. 3	(extra cost)
Switching point accuracy in % of the control/limit value range	In the upper third of the scale 0/-5 %, at scale beginning 0/-10 %				

Ambient temperature influence	Based on the control/limit value range If the ambient temperature at the switching head and/or the capillary deviates from the calibration ambient temperature 22 °C, a switching point shift occurs. Higher ambient temperatures = lower switching point Lower ambient temperatures = higher switching point		
Panel-mounted thermostats with scale limit value	< 200 °C	≥ 200 °C ≤ 350 °C	> 350 °C ≤ 500 °C
Influence on the switching head	0.17 %/K	0.13 %/K	0.12 %/K
Influence on the capillary per meter	0.054 %/K	0.11 %/K	0.03 %/K
Admissible storage temperature	-50 to +80 °C or up to max. admissible ambient temperature, see nameplate		
Admissible ambient temperature during use	See nameplate		
Rated position (NL)	Any		

Switching head

Material	
Chassis	Sheet steel, galvanized
Fastening	2 M3 screws, spacing 22 mm
Scale range	250°
Electrical connection	Screw connection up to 2.5 mm^2 conductor cross section
Limit value setting	The limit value can be adjusted with a screwdriver on the adjustment spindle before installation.
Protection type	IP00, according to DIN EN 60529
Weight	Approx. 200 g

Process connection

Type ETH with capillary	Process connection 10: Plain cylindrical probe (standard) Process connection 20: Screw-in thermowell (upon request) Screw-in sleeve with screw-in spigot G 1/2, form A, according to DIN 3852/2, and clamping piece with fixing screw to lock the probe
Material	
Up to 150 °C	CuZn, nickel-plated (standard)
Over 150 °C	CrNi
Fitting length	Standard lengths: 100, 120, 150, 200 or 300 mm (other lengths upon request)
Immersion tube Ø	D = 8 mm

⇨ For different process connections and thermowells refer to data sheet 606710.

JUMO GmbH & Co. KG
Delivery address: Mackenrodtstraße 14
36039 Fulda, Germany
Postal address: 36035 Fulda, Germany
Phone: +49 661 6003-0
Fax: +49 661 6003-607
Email: mail@jumo.net
Internet: www.jumo.net

JUMO Instrument Co. Ltd.
JUMO House
Temple Bank, Riverway
Harlow, Essex, CM20 2DY, UK
Phone: +44 1279 63 55 33
Fax: +44 1279 62 50 29
Email: sales@jumo.co.uk
Internet: www.jumo.co.uk

JUMO Process Control, Inc.
6724 Joy Road
East Syracuse, NY 13057, USA
Phone: +1 315 437 5866
Fax: +1 315 437 5860
Email: info.us@jumo.net
Internet: www.jumousa.com

Approvals and approval marks

DIN	
Testing agency	DIN CERTCO/TÜV Süd
Certificates/certification numbers	STW(STB)799S
Inspection basis	DIN EN 14597
Valid for	ETH-20 (Type 602010/20 [STW (STB)])
DIN	
Testing agency	DIN CERTCO/TÜV Süd
Certificates/certification numbers	STB800
Inspection basis	DIN EN 14597
Valid for	ETH-70 (Type 602010/70 [STB])
DGRL	
Testing agency	TÜV Süd
Certificates/certification numbers	Z-IS-TAF-MUC-17-11-2652099-021
Inspection basis	2014/68/EU, DIN EN 14597
Valid for	ETH-20 (Type 602010/20 [STW]), ETH-70 (Type 602010/70 [STB])
EAC[a]	
Testing agency	GOST Norm AG
Certificates/certification numbers	0198420
Inspection basis	TR ZU 004/2011 (LVD)
Valid for	ETH (Type 602010)

[a] Russian documentation upon request.

JUMO GmbH & Co. KG
Delivery address: Mackenrodtstraße 14
36039 Fulda, Germany
Postal address: 36035 Fulda, Germany
Phone: +49 661 6003-0
Fax: +49 661 6003-607
Email: mail@jumo.net
Internet: www.jumo.net

JUMO Instrument Co. Ltd.
JUMO House
Temple Bank, Riverway
Harlow, Essex, CM20 2DY, UK
Phone: +44 1279 63 55 33
Fax: +44 1279 62 50 29
Email: sales@jumo.co.uk
Internet: www.jumo.co.uk

JUMO Process Control, Inc.
6724 Joy Road
East Syracuse, NY 13057, USA
Phone: +1 315 437 5866
Fax: +1 315 437 5860
Email: info.us@jumo.net
Internet: www.jumousa.com

Dimensions

ETH-70 (Type 602010/70)

Process connection plain cylindrical probe, without thermowell

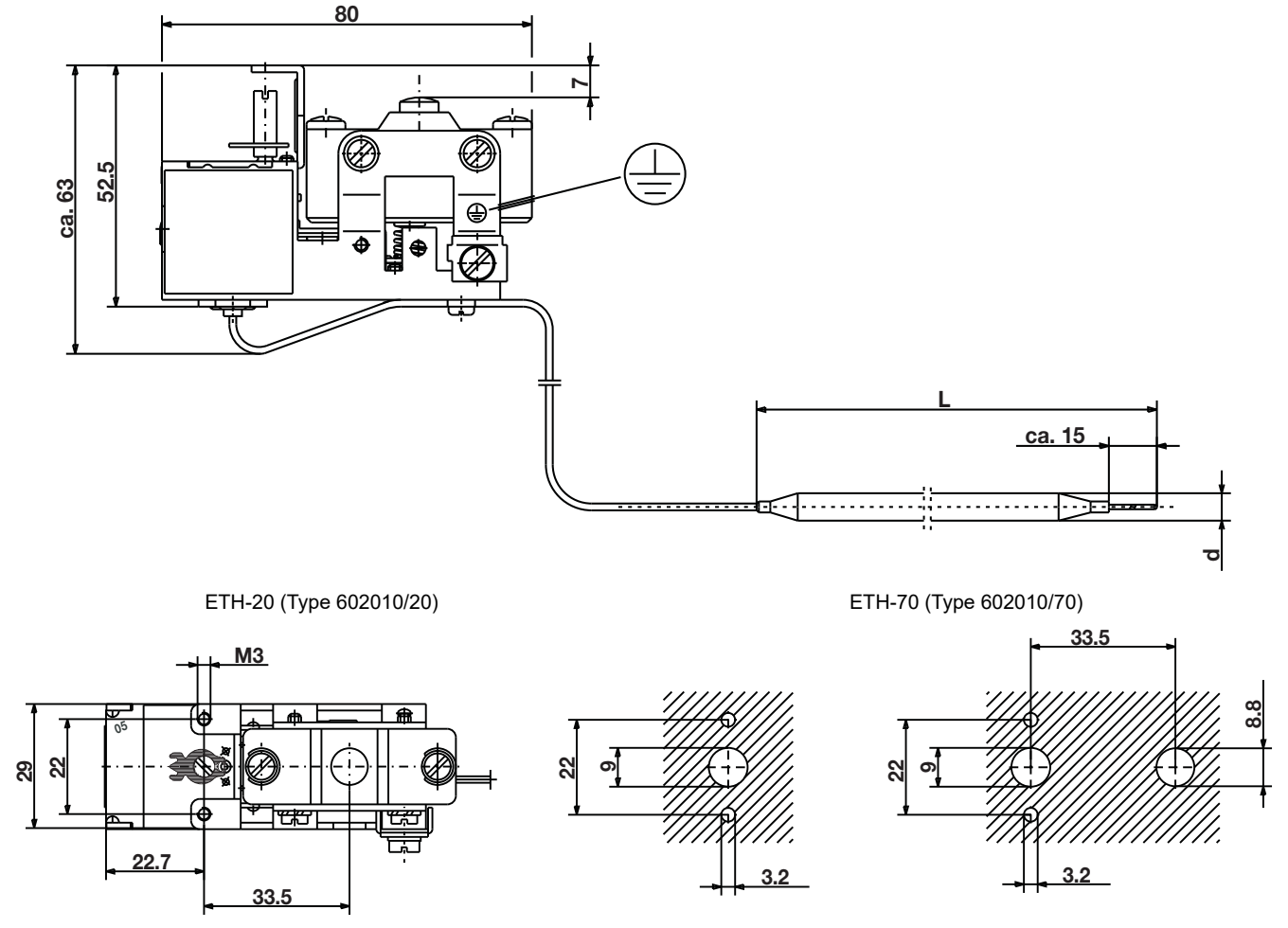

JUMO GmbH & Co. KG
Delivery address: Mackenrodtstraße 14
36039 Fulda, Germany
Postal address: 36035 Fulda, Germany
Phone: +49 661 6003-0
Fax: +49 661 6003-607
Email: mail@jumo.net
Internet: www.jumo.net

JUMO Instrument Co. Ltd.
JUMO House
Temple Bank, Riverway
Harlow, Essex, CM20 2DY, UK
Phone: +44 1279 63 55 33
Fax: +44 1279 62 50 29
Email: sales@jumo.co.uk
Internet: www.jumo.co.uk

JUMO Process Control, Inc.
6724 Joy Road
East Syracuse, NY 13057, USA
Phone: +1 315 437 5866
Fax: +1 315 437 5860
Email: info.us@jumo.net
Internet: www.jumousa.com

Connection diagram

The connection diagram in the data sheet provides information on product selection.

For the electrical connection, only use the installation instructions or the operating manual.

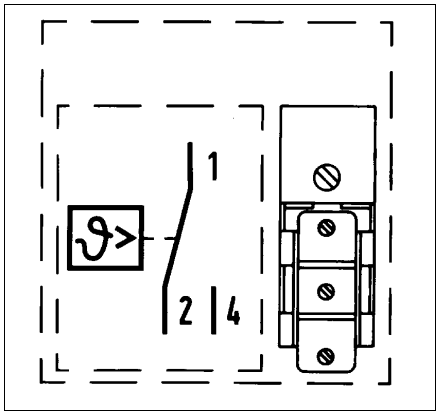

ETH-20 (Type 602010/20)
with changeover contact

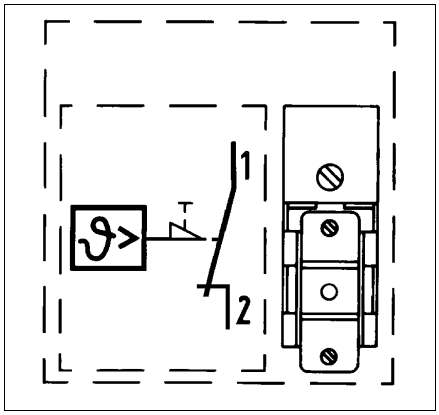

ETH-70 (Type 602010/70)
with NC contact, and restart lock

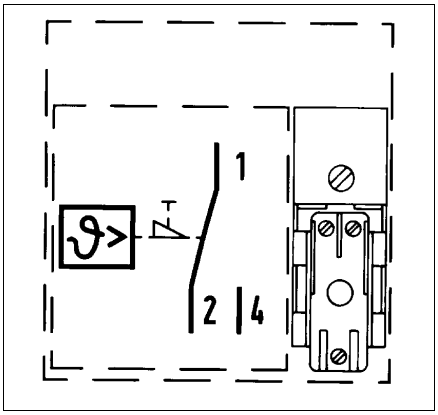

ETH-70 (Type 602010/70)
with NC contact, restart lock, and additional signal contact

JUMO GmbH & Co. KG
Delivery address: Mackenrodtstraße 14
36039 Fulda, Germany
Postal address: 36035 Fulda, Germany
Phone: +49 661 6003-0
Fax: +49 661 6003-607
Email: mail@jumo.net
Internet: www.jumo.net

JUMO Instrument Co. Ltd.
JUMO House
Temple Bank, Riverway
Harlow, Essex, CM20 2DY, UK
Phone: +44 1279 63 55 33
Fax: +44 1279 62 50 29
Email: sales@jumo.co.uk
Internet: www.jumo.co.uk

JUMO Process Control, Inc.
6724 Joy Road
East Syracuse, NY 13057, USA
Phone: +1 315 437 5866
Fax: +1 315 437 5860
Email: info.us@jumo.net
Internet: www.jumousa.com

Order details

	(1)	**Basic type**
602010		Panel-mounted thermostats ETH
	(2)	**Basic type extension**
20		ETH-20 Safety temperature monitor (STW)
70		ETH-70 Safety temperature limiter (STB)
	(3)	**Control range**
043		20 to 150 °C
045		20 to 400 °C
046		20 to 500 °C
052		30 to 110 °C
063		50 to 250 °C
064		50 to 300 °C
066		60 to 130 °C
	(4)	**Switching differential**
00		None
20		2 %
50		5 %
70		7 %
90		9 %
	(5)	**Capillary length**
1000		1,000 mm
2000		2,000 mm
3000		3,000 mm
4000		4,000 mm
5000		5,000 mm
	(6)	**Capillary material Fernleitung**
20		CrNi (stainless steel)
40		Cu (copper)
	(7)	**Process connection**
10		Plain cylindrical probe
20		Screw-in thermowell 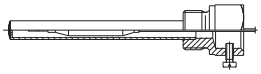
	(8)	**Process connection thread**
00		None
13		G 1/2
	(9)	**Process connection material**
00		None
20		CrNi (stainless steel)
46		CuZn (brass)
	(10)	**Insertion length**
000		Without thermowell
100		100 mm
120		120 mm
150		150 mm
200		200 mm
300		300 mm

JUMO GmbH & Co. KG
Delivery address: Mackenrodtstraße 14
36039 Fulda, Germany
Postal address: 36035 Fulda, Germany
Phone: +49 661 6003-0
Fax: +49 661 6003-607
Email: mail@jumo.net
Internet: www.jumo.net

JUMO Instrument Co. Ltd.
JUMO House
Temple Bank, Riverway
Harlow, Essex, CM20 2DY, UK
Phone: +44 1279 63 55 33
Fax: +44 1279 62 50 29
Email: sales@jumo.co.uk
Internet: www.jumo.co.uk

JUMO Process Control, Inc.
6724 Joy Road
East Syracuse, NY 13057, USA
Phone: +1 315 437 5866
Fax: +1 315 437 5860
Email: info.us@jumo.net
Internet: www.jumousa.com

	(11)	**Immersion tube diameter**
00		Without thermowell
8		8 mm
10		10 mm
	(12)	**Probe diameter**
6		6 mm
8		8 mm
	(13)	**Extra code**
000		None
574		Microswitch with changeover contact, with restart lock only for STB
702		Snap-action switch contact, gold-plated (only with switching differential 3 %, 5 %, and 7 %, and STB)

	(1)		(2)		(3)		(4)		(5)		(6)		(7)	
Order code		/		-		-		-		-		-		-
Order example	602010	/	70	-	052	-	00	-	1000	-	40	-	10	-

(8)		(9)		(10)		(11)		(12)		(13)	
	-		-		-		-		/		, ...[a]
00	-	00	-	100	-	00	-	8	/	702	

[a] List extra codes in sequence, separated by commas.

JUMO GmbH & Co. KG
Delivery address: Mackenrodtstraße 14
36039 Fulda, Germany
Postal address: 36035 Fulda, Germany
Phone: +49 661 6003-0
Fax: +49 661 6003-607
Email: mail@jumo.net
Internet: www.jumo.net

JUMO Instrument Co. Ltd.
JUMO House
Temple Bank, Riverway
Harlow, Essex, CM20 2DY, UK
Phone: +44 1279 63 55 33
Fax: +44 1279 62 50 29
Email: sales@jumo.co.uk
Internet: www.jumo.co.uk

JUMO Process Control, Inc.
6724 Joy Road
East Syracuse, NY 13057, USA
Phone: +1 315 437 5866
Fax: +1 315 437 5860
Email: info.us@jumo.net
Internet: www.jumousa.com

Panel-Mounted Thermostats, EM Series

with 1, 2, 3, or 4 single-pole snap-action switches

Special features

- Available with 1, 2, 3 or 4 single-pole snap-action switches
- Approved according to the latest standards

Brief description

Thermostats control and monitor thermal processes. The devices of the EM series are available as temperature controllers TR, temperature monitors TW, temperature limiters TB, safety temperature monitors STW (STB), and safety temperature limiter STB. In the event of a malfunction, the STB switches the monitored machine to a safe operating status.

Panel-mounted thermostats operate according to the fluid expansion principle – a microswitch is used as an electrical switching element.

Switching functions

Temperature controller TR, temperature monitor TW, and safety temperatur monitor STW

If the temperature on the temperature probe exceeds the setpoint value, the electrical circuit is opened or closed by a microswitch. If the temperature falls below the selected setpoint value (by the switching differential), the microswitch is reset to its initial position.

Temperature limiter TB and safety temperature limiter STB
If the temperature at the temperature sensor exceeds the set limit value, the electrical circuit is opened or closed by a microswitch.

After the temperature has fallen below the limit value by approx. 10 % of the scale range (approx. 15 % with setpoint setting >350 °C), the microswitch can be unlocked manually.

For set points above 120 °C, the set point adjusted on the STB must be secured against adjustment (e.g. with a lead seal).

Use of the safety temperature monitor STW as a safety temperature limiter STB
The circuitry used with the thermostat must comply with DIN EN 14597 and VDE 0631.

Self-monitoring for safety temperature limiter STB and safety temperature monitor STW (STB)
If the measuring system is destroyed (i.e. if the expansion fluid escapes) the pressure in the membrane of the STB and STW (STB) drops and permanently opens the electrical circuit. Unlocking is then no longer possible.

When the STW (STB) and STB sensors cools down to the negative temperature range, the circuit 1 to 2 opens, but must be unlocked manually by the restart knob when the temperature rises. The STW (STB) restarts automatically.

Approvals and approval marks (see technical data)

JUMO GmbH & Co. KG
Delivery address: Mackenrodtstraße 14
36039 Fulda, Germany
Postal address: 36035 Fulda, Germany
Phone: +49 661 6003-0
Fax: +49 661 6003-607
Email: mail@jumo.net
Internet: www.jumo.net

JUMO Instrument Co. Ltd.
JUMO House
Temple Bank, Riverway
Harlow, Essex, CM20 2DY, UK
Phone: +44 1279 63 55 33
Fax: +44 1279 62 50 29
Email: sales@jumo.co.uk
Internet: www.jumo.co.uk

JUMO Process Control, Inc.
6724 Joy Road
East Syracuse, NY 13057, USA
Phone: +1 315 437 5866
Fax: +1 315 437 5860
Email: info.us@jumo.net
Internet: www.jumousa.com

Types and DIN registry numbers

DIN-tested up to max. 500 °C.

The DIN registry no. will become null and void if thermowells are used that are not specified in our data sheet 606710.

Version	Types	Switching function	DIN registry numbers
1 pole snap-action switches	EM-1	TR	TR777
	EM-2	TW	TW778
	EM-3[a]	TW	TW778
	EM-4[a]	TB	TB780
	EM-5	TB	TB780
2 single-pole snap-action switches	EM-13	TR/TW	TR777
	EM-23[a]	TW/TW	TW778
	EM-33	TW/TW	TW778
	EM-14	TR/TB	TR777
	EM-24	TW/TB	TW778
	EM-44[a]	TB/TB	TB780
	EMF-54	TB/TB	TB780
3 single-pole snap-action switches	EMF-133	TR/TW/TW	TR777
	EMF-134	TR/TW/TB	TR777
	EMF-233	TW/TW/TW	TW778
	EMF-234	TW/TW/TB	TW778
	EMF-333[a]	TW/TW/TW	TW778
	EMF-444[a]	TB/TB/TB	TB780
	EMF-544	TB/TB/TB	TB780
4 single-pole snap-action switches	EMF-1333	TR/TW/TW/TW	TR777
	EMF-2333	TW/TW/TW/TW	TW778
	EMF-3333[a]	TW/TW/TW/TW	TW778
Fail-safe version	EM-40[a]	STB	STB782
	EM-50	STB	STB782
	EM-20	STW (STB)	STW(STB)775S
	EM-30[a]	STW (STB)	STW(STB)775S

[a] Setpoint value or limit value permanently factory-set according to customer specifications.

JUMO GmbH & Co. KG
Delivery address: Mackenrodtstraße 14
36039 Fulda, Germany
Postal address: 36035 Fulda, Germany
Phone: +49 661 6003-0
Fax: +49 661 6003-607
Email: mail@jumo.net
Internet: www.jumo.net

JUMO Instrument Co. Ltd.
JUMO House
Temple Bank, Riverway
Harlow, Essex, CM20 2DY, UK
Phone: +44 1279 63 55 33
Fax: +44 1279 62 50 29
Email: sales@jumo.co.uk
Internet: www.jumo.co.uk

JUMO Process Control, Inc.
6724 Joy Road
East Syracuse, NY 13057, USA
Phone: +1 315 437 5866
Fax: +1 315 437 5860
Email: info.us@jumo.net
Internet: www.jumousa.com

Technical data

Control ranges and probe table

For TR, TW, TB – liquid-filled

Control range/ limit value range °C	Switching differential %	Max. probe temperature °C	Max. switching head temperature °C	Max. capillary length in mm	Max. sequence contact gap K	Probe length "L", probe Ø "d" in mm Ø 6 (Standard)	Ø 8
-20 to +40	1 2.5 5 7	50 50 95 100	50	5000	5 8 25 50	245 245 138 103	145 145 91 73
0 to 50	1 2.5 5 7	60 60 105 110	60		5 10 25 50	283 283 159 117	165 165 101 80
20 to 90	1 2.5 5 7	115 115 140 175	80		7 14 35 70	210 210 121 91	127 127 82 67
0 to 100	1 2.5 5 7	125 125 165 200	80		10 20 50 100	157 157 94 73	100 100 68 58
30 to 110	1 2.5 5 7	135 135 170 200	80		8 16 40 80	188 188 110 84	116 116 76 63
0 to 150	1 2.5 5	173 173 200	80		15 30 75	113 113 72	78 78 57
0 to 200	1 2.5	230 230	80		20 40	113	78
50 to 200	1 2.5	230 230	80		15 30	139	92
50 to 250	1 2.5 5	288 288 300	80		20 40 100	105 105 64	70 70 49
50 to 300	1 2.5	345 345	80		25 50	87	61

For TR, TW, TB – gas-filled

Control range/ limit value range °C	Switching differential %	Max. probe temperature °C	Max. switching head temperature °C	Max. capillary length in mm	Max. sequence contact gap K	Probe length "L", probe Ø "d" in mm Ø 6 (Standard)	Ø 8
20 to 400	5 10	460 500	80	5000	75 200	237 127	137 81
20 to 500	3/5 6 10	575	80	1000 5000 5000	48 95 250	278 276 95	158 106 65

JUMO GmbH & Co. KG
Delivery address: Mackenrodtstraße 14
36039 Fulda, Germany
Postal address: 36035 Fulda, Germany
Phone: +49 661 6003-0
Fax: +49 661 6003-607
Email: mail@jumo.net
Internet: www.jumo.net

JUMO Instrument Co. Ltd.
JUMO House
Temple Bank, Riverway
Harlow, Essex, CM20 2DY, UK
Phone: +44 1279 63 55 33
Fax: +44 1279 62 50 29
Email: sales@jumo.co.uk
Internet: www.jumo.co.uk

JUMO Process Control, Inc.
6724 Joy Road
East Syracuse, NY 13057, USA
Phone: +1 315 437 5866
Fax: +1 315 437 5860
Email: info.us@jumo.net
Internet: www.jumousa.com

Control ranges and temperature probes

For STB and STW (STB) – liquid-filled

Setting range	Scale range	Max. probe temperature	Max. switching head temperature	Max. capillary length	Limit value tolerance	Probe length "L", probe Ø "d" in mm	
°C	°∠	°C	°C	in mm	K	Ø 6 (Standard)	Ø 8
75 to 100	78	125	80	5000	+0 -7	84	63
85 to 110	78	135					
120 to 150	77	173			+0 -9	80	57
160 to 200	79	230			+0 -12	64	49
210 to 250	71	288			+0 -13	61	47
250 to 300	79	345			+0 -16	55	-

For STB and STW (STB) – gas-filled

Setting range	Scale range	Max. probe temperature	Max. switching head temperature	Max. capillary length	Limit value tolerance	Probe length "L", probe Ø "d" in mm	
°C	°∠	°C	°C	in mm	K	Ø 6 (Standard)	Ø 8
300 to 400	70	460	80	3000	+0 -23	148	92
350 to 500	72	575			+0 -29	127	81

When the switching points are permanently factory-set, the deactivation value must be specified in addition to the control range (e.g. control range 80 to 100 °C, permanently set to 95 °C).

Capillary and temperature probe

Type	Scale limit value	Capillary	Probe
EM-...	Up to 200 °C	Copper (Cu) Ø 1.5 mm Material no. Cu-DHP	Copper (Cu) Material no. Cu-DHP Hard soldered
	Up to 350 °C	Copper (Cu) Ø 1.5 mm Material no. Cu-DHP	Stainless steel (CrNi) Material no. 1.4571 Hard soldered
	Up to 500 °C	Stainless steel (CrNi) Ø 1.5 mm	Stainless steel (CrNi) Material no. 1.4571 Welded
	Up to 350 °C	Stainless steel (CrNi) Ø 1.5 mm	Stainless steel (CrNi) Material no. 1.4571 Welded (available at extra cost)
Capillary length	Standard 1,000 mm, max. 5,000 mm		
Min. bending radius of capillary	5 mm		

NOTE:
Upon request the capillary length can be increased up to a maximum of 5,000 mm if the allowable temperature on the sensor, capillary, and switching head is not reached.
Please let us know the actual temperature values to which the thermostat is exposed.

JUMO GmbH & Co. KG
Delivery address: Mackenrodtstraße 14
36039 Fulda, Germany
Postal address: 36035 Fulda, Germany
Phone: +49 661 6003-0
Fax: +49 661 6003-607
Email: mail@jumo.net
Internet: www.jumo.net

JUMO Instrument Co. Ltd.
JUMO House
Temple Bank, Riverway
Harlow, Essex, CM20 2DY, UK
Phone: +44 1279 63 55 33
Fax: +44 1279 62 50 29
Email: sales@jumo.co.uk
Internet: www.jumo.co.uk

JUMO Process Control, Inc.
6724 Joy Road
East Syracuse, NY 13057, USA
Phone: +1 315 437 5866
Fax: +1 315 437 5860
Email: info.us@jumo.net
Internet: www.jumousa.com

Electrical data

Switching element 1, 2, 3, or 4 single-pole snap-action switches	EM-1, EM-2, EM-3, EM-20, EM-30	EM-4, EM-5, EM-40, EM-50	EM-4.../U, EM-5.../U, EM-40/U, EM-50/U
	Microswitch with changeover contact	Microswitch with N/C contact and restart lock	Microswitch with N/C contact, restart lock, and additional signal contact
Maximum switching capacity	Switching function Switching differential	N/C contact, terminal 2	N/O contact, terminal 4
	TR, TW, STB (STB) 2.5 %, 5 %, 6 %, 7 %, 10 %	AC 230 V +10 % 16 (3) A, cos φ = 1 (0.6) DC 230 V +10 %, 0.25 A	AC 230 V +10 % 8 (1.5) A, cos φ = 1 (0.6) DC 230 V +10 %, 0.25 A
	TB, STB	AC 230 V +10 % 16 (3) A, cos φ = 1 (0.6) DC 230 V +10 %, 0.25 A	AC 230 V +10 % 2 (1) A, cos φ = 1 (0.6) DC 230 V +10 %, 0,25 A
	TR, TW 1 %, 3 %	AC 230 V +10 %, 6 (2) A, cos φ = 1 (0.6), DC 230 V +10 %, 0.25 A	
	TR, TW 2.5 %	Microswitch with gold plating, extra code 702, AC/DC 24 V, 0.1 A	
Contact reliability	To ensure the greatest possible switching reliability we recommend a minimum load of: For silver contacts: AC/DC 24 V, 100 mA For gold-plated contacts (extra code 702): AC/DC = 10 V, 5 mA		
Rating surge voltage	2500 V (via the switching contacts 400 V)		
Overvoltage category	II		
Required fuse rating	See maximum switching capacity		
Electrical connection	Standard: Tab connector A 6.3 × 0.8 DIN 46244 Extra code 699: Screw connection up to 2.5 mm^2 conductor cross section (available at extra cost), also suitable for retrofitting		

Operating data

Switching differential in % of control range/limit value range	Measuring system				
	Liquid-filled		Gas-filled		
	Nominal value	Possible actual value	Nominal value	Possible actual value	
Switching function					
TR, TW	2.5	Approx. 2.5 to 3.5	5	Approx. 5 to 11	Standard
	5	Approx. 5 to 6	6	Approx. 6 to 14	Upon request
	7	Approx. 7 to 8	10	Approx. 10 to 16	Upon request
	1	Approx. 1 to 2	3	Approx. 2.5 to 4	Extra cost
STW (STB)	5	Approx. 5 to 7	6	Approx. 6 to 16	Standard

Sequence contact gap on multi-pole versions	Switching differential	Sequence contact gap relative to scale range		Switching point accuracy of the sequence contact gaps from the scale range
		Minimum	Maximum	
	1 %	1 %	According to control range table	≤ 1 %
	2.5 %	1 %		≤ 1 %
	3 %, 5 %	2 %		≤ 1 %
	6 %, 7 %, 10 %	3 %		≤ 1 %
	The sequence contact gap can be specified in °C in relation to the setpoint of contact I. (The contact track no. is stamped on the back of the housing par.)			
	Prefix - = switching **before** reaching the setpoint value Prefix **+** = switching **after** reaching the setupoint value For the synchrozized version, specify "0" as the sequence contact gap.			

JUMO GmbH & Co. KG
Delivery address: Mackenrodtstraße 14
36039 Fulda, Germany
Postal address: 36035 Fulda, Germany
Phone: +49 661 6003-0
Fax: +49 661 6003-607
Email: mail@jumo.net
Internet: www.jumo.net

JUMO Instrument Co. Ltd.
JUMO House
Temple Bank, Riverway
Harlow, Essex, CM20 2DY, UK
Phone: +44 1279 63 55 33
Fax: +44 1279 62 50 29
Email: sales@jumo.co.uk
Internet: www.jumo.co.uk

JUMO Process Control, Inc.
6724 Joy Road
East Syracuse, NY 13057, USA
Phone: +1 315 437 5866
Fax: +1 315 437 5860
Email: info.us@jumo.net
Internet: www.jumousa.com

Switching point accuracy in % of control range/limit value range	Switching differential		In the upper third of the scale or limit value
	Liquid-filled	Gas-filled	
Switching function			
TR	1 %, 2.5 %	-	±1.5 %
	5 %	3 %, 5 %	±3 %
	7 %	6 %, 10 %	±4 %
TW	1 %, 2.5 %	-	±1.5 %
	5 %	3 %, 5 %	±3 %
	7 %	6 %, 10 %	±4 %
TB	-	-	+0 %
			-5 %
STW (STB)	See table for control ranges and probes		

Mid ambient temperature influence	Deviation of the ambient temperature at the switching head and/or capillary from the 22 °C calibration ambient temperature produces a switching point offset. Higher ambient temperature = low switching point Lower ambient temperature = higher switching point									
	TR, TW, TB			STW, STB	TR, TW, TB		STW, STB	TR, TW, TB, STW, STB		
For temperatures with scale limit value/ limit value	< 200 °C				≥ 200 °C ≤ 350 °C			≥ 400 °C ≤ 500 °C		
Switching differential in %	1/2.5	5	7	7/-	1/2.5	5	7/-	3/5	6	10
Ambient temperature influence on the switching head in %/°C	0.15	0.26	0.34	0.43	0.12	0.21	0.35	0.12	0.17	0.24
Ambient temperature influence on the capillary in %/m	0.05 · °C · m		0.09 · °C · m		0.09 · °C · m		0.07 · °C· m	0.05 · °C · m		
Temperature compensation **(TK)**	For detailed information see diagram.									
Temperatures										
Admissible storage temperature	-50 to +50 °C									
Admissible ambient temperature for use	80 °C max.									
Nominal position (NL)	Any									
Operating medium	Water, oil, air, superheated steam									
Time constant $t_{0.632}$										
In water	≤ 45 s									
In oil	≤ 60 s									
In air or superheated steam	≤ 120 s									

Mode of operation	According to EN 60730-1, DIN EN 60730-2-9, DIN EN 14597
TR, TW	2 BL
TB	2 BFHLPV
STW (STB)	2 BKLNP
STB	2BFHKLNPV
	Declaration:
	2 Mode of operation type 2
	B Automatic mode of operation with micro disconnection
	F Only adjustable with tool
	H Release mechanism whose contacts can not be prevented from opening
	K With probe break protection
	L No auxiliary energy required
	P Mode of operation type 2, tested by declared temperature changes
	V Lockout

JUMO GmbH & Co. KG
Delivery address: Mackenrodtstraße 14
36039 Fulda, Germany
Postal address: 36035 Fulda, Germany
Phone: +49 661 6003-0
Fax: +49 661 6003-607
Email: mail@jumo.net
Internet: www.jumo.net

JUMO Instrument Co. Ltd.
JUMO House
Temple Bank, Riverway
Harlow, Essex, CM20 2DY, UK
Phone: +44 1279 63 55 33
Fax: +44 1279 62 50 29
Email: sales@jumo.co.uk
Internet: www.jumo.co.uk

JUMO Process Control, Inc.
6724 Joy Road
East Syracuse, NY 13057, USA
Phone: +1 315 437 5866
Fax: +1 315 437 5860
Email: info.us@jumo.net
Internet: www.jumousa.com

Housing

Material	Galvanized sheet steel
Mounting	
Standard	With 2 M3 screws, spaced 22 mm
Extra code 704	Switching head mounting with 2 M4 screws, spaced 28 mm
Extra code 705	Switching head mounting with 2 M3 screws, spaced 33 mm
Extra code 710	Central mounting M10 × 1 with acorn nut (for TB and STB only)
Setpoint value setting	
TR	Switching point adjustable from outside with rotary knob.
TW, TB, STB, STW (STB)	Switching point adjustable with screwdriver.
Types EM-3, EM-4, EM-30, EM-33, EM-40, EM-44, EMF-444, EMF-3333	Permanently set at the factory to customer requirements.
Setpoint adjuster	See data sheet 606715
Scale range	Standard 250°∠ (for STB and STW (STB)), see table for control ranges and probes
Protection type	IP00 according to EN 60529
Weight	Approx. 300 g

Process connection

EM series with capillary	**Plain cylindrical probe** "10" (standard) **Screw-in protection tube** "20" (upon request) Screw-in sleeve with screw-in spigot G 1/2, form A, according to DIN 3852/2 and clamping piece with fixing screw for securing the probe
Material	
Protection tube up to 150 °C	CuZn (standard)
Protection tube above 150 °C	CrNi
Insertion length S	
Standard	100, 120, 150, 200 or 300 mm (other lengths upon request)
Protection tube Ø	D = 8 mm, D = 10 mm

For further process connections and protection tubes see data sheet 606710.

Approvals and approval marks

DIN	
Testing agency	DIN CERTCO/TÜV Süd
Certificates/certification numbers	TR777
Inspection basis	DIN EN 14597
Valid for	EM-1
DIN	
Testing agency	DIN CERTCO/TÜV Süd
Certificates/certification numbers	TW778
Inspection basis	DIN EN 14597
Valid for	EM-2, EM-3
DIN	
Testing agency	DIN CERTCO/TÜV Süd
Certificates/certification numbers	TB780
Inspection basis	DIN EN 14597
Valid for	EM-4, EM-5

JUMO GmbH & Co. KG
Delivery address: Mackenrodtstraße 14
36039 Fulda, Germany
Postal address: 36035 Fulda, Germany
Phone: +49 661 6003-0
Fax: +49 661 6003-607
Email: mail@jumo.net
Internet: www.jumo.net

JUMO Instrument Co. Ltd.
JUMO House
Temple Bank, Riverway
Harlow, Essex, CM20 2DY, UK
Phone: +44 1279 63 55 33
Fax: +44 1279 62 50 29
Email: sales@jumo.co.uk
Internet: www.jumo.co.uk

JUMO Process Control, Inc.
6724 Joy Road
East Syracuse, NY 13057, USA
Phone: +1 315 437 5866
Fax: +1 315 437 5860
Email: info.us@jumo.net
Internet: www.jumousa.com

DIN	
Testing agency	DIN CERTCO/TÜV Süd
Certificates/certification numbers	STW(STB)775 S
Inspection basis	DIN EN 14597
Valid for	EM-20, EM-30
DIN	
Testing agency	TÜV Süd
Certificates/certification numbers	B_{10d} = 250.000[a]
Inspection basis	DIN EN ISO 13849-1
Valid for	EM-20, EM-30, EM-40, EM-50
PED	
Testing agency	TÜV Süd
Certificates/certification numbers	Z-IS-TAF-MUC-18-06-2652099-07102504
Inspection basis	2014/68/EU, DIN EN 14597
Valid for	EM-20, EM-30, EM-40, EM-50
UL	
Testing agency	UL
Certificates/certification numbers	E66358
Inspection basis	UL 873, CSA-22.2 No. 24
Valid for	EM-...
UL	
Testing agency	UL
Certificates/certification numbers	MH45736
Inspection basis	UL 353, CSA-22.2 No. 24
Valid for	EM-4, EM-5, EM-14, EM-24, EM-40, EM-44, EM-50, EMF-54, EMF-134, EMF-234, EMF-444, EMF-544, EMF-1334, EMF-2334, EMF-4444, EMF-5444
EAC[b]	
Testing agency	Gost Norm AG
Certificates/certification numbers	TC RU C-DE.AB98.B.00348
Inspection basis	Technical rules of the customs union Russia/Belarus/Kazakhstan
Valid for	EM-...
Railway application	
Testing agency	JUMO
Certificates/certification numbers	-
Inspection basis	EN 50155
Valid for	EM-... with extra code 950

[a] For detailed information please refer to safety manual JUMO EM602021, 602026

[b] Russian documentation upon request.

JUMO GmbH & Co. KG
Delivery address: Mackenrodtstraße 14
36039 Fulda, Germany
Postal address: 36035 Fulda, Germany
Phone: +49 661 6003-0
Fax: +49 661 6003-607
Email: mail@jumo.net
Internet: www.jumo.net

JUMO Instrument Co. Ltd.
JUMO House
Temple Bank, Riverway
Harlow, Essex, CM20 2DY, UK
Phone: +44 1279 63 55 33
Fax: +44 1279 62 50 29
Email: sales@jumo.co.uk
Internet: www.jumo.co.uk

JUMO Process Control, Inc.
6724 Joy Road
East Syracuse, NY 13057, USA
Phone: +1 315 437 5866
Fax: +1 315 437 5860
Email: info.us@jumo.net
Internet: www.jumousa.com

Dimensions

EM-1, EM-2, EM-3, EM-4, EM-5

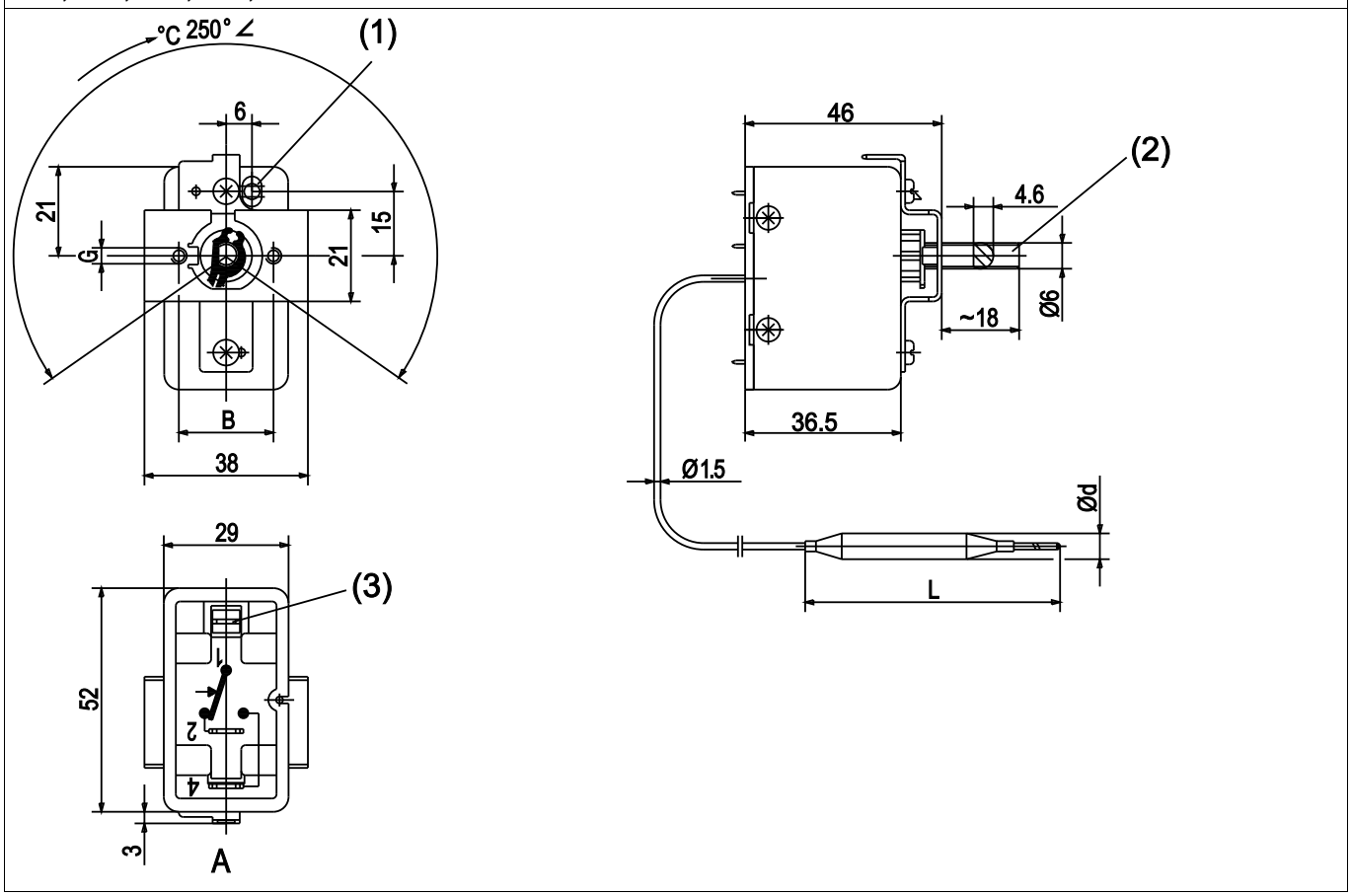

(1) Restart knob only with abbreviation 4 and 5

(2) Not applicable with abbreviation 2, 3, 4, 5

(3) Tab connector DIN 46244-A6,3-0,8

(A) Rear view

JUMO GmbH & Co. KG
Delivery address: Mackenrodtstraße 14
36039 Fulda, Germany
Postal address: 36035 Fulda, Germany
Phone: +49 661 6003-0
Fax: +49 661 6003-607
Email: mail@jumo.net
Internet: www.jumo.net

JUMO Instrument Co. Ltd.
JUMO House
Temple Bank, Riverway
Harlow, Essex, CM20 2DY, UK
Phone: +44 1279 63 55 33
Fax: +44 1279 62 50 29
Email: sales@jumo.co.uk
Internet: www.jumo.co.uk

JUMO Process Control, Inc.
6724 Joy Road
East Syracuse, NY 13057, USA
Phone: +1 315 437 5866
Fax: +1 315 437 5860
Email: info.us@jumo.net
Internet: www.jumousa.com

EM-13, EM-14, EM-20, EM-23, EM-24, EM-30, EM-33, EM-40, EM-44, EM-50, EMF-54

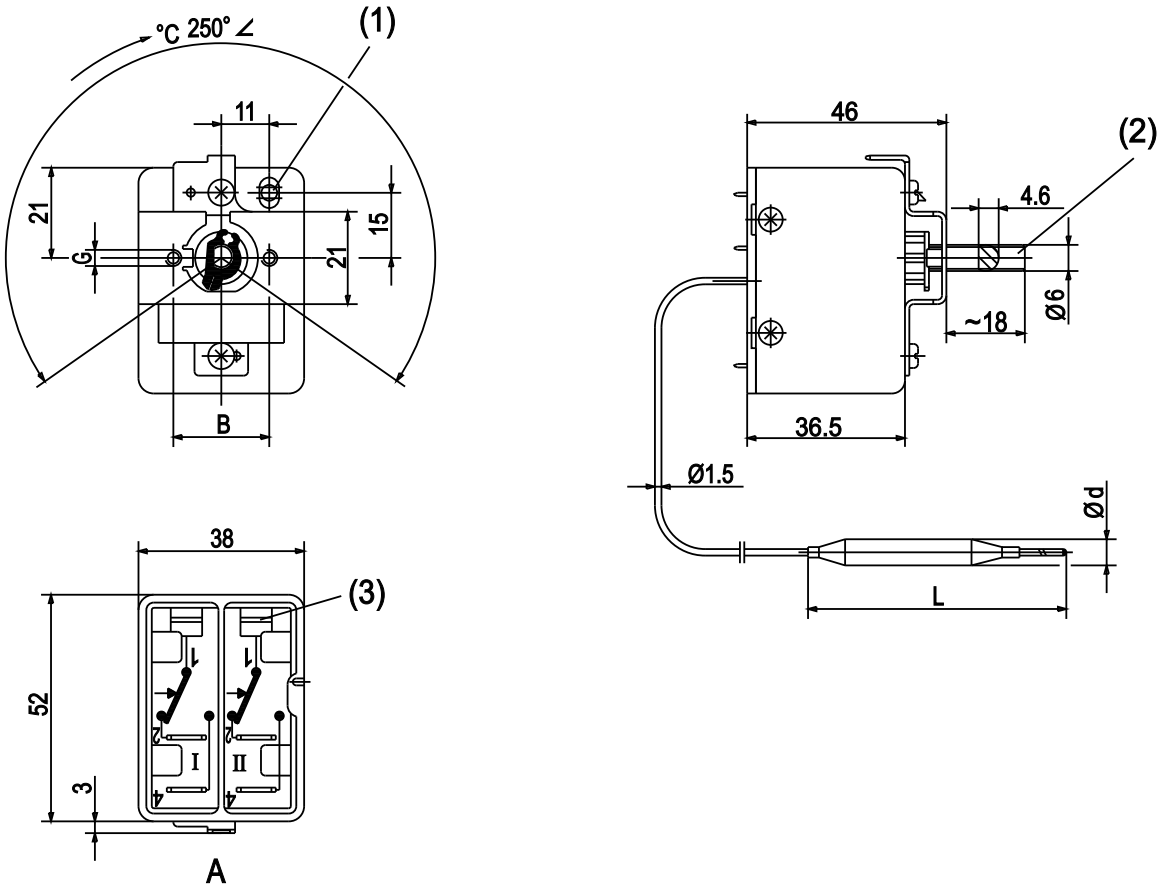

(1) Restart knob only with abbreviation 40, 44, 50 and 5

(2) Not applicable with abbreviation 2, 3, 4, 5, 20, 30, 40 and 50

(3) Tab connector DIN 46244-A6,3-0,8

(A) Rear view

JUMO GmbH & Co. KG
Delivery address: Mackenrodtstraße 14
36039 Fulda, Germany
Postal address: 36035 Fulda, Germany
Phone: +49 661 6003-0
Fax: +49 661 6003-607
Email: mail@jumo.net
Internet: www.jumo.net

JUMO Instrument Co. Ltd.
JUMO House
Temple Bank, Riverway
Harlow, Essex, CM20 2DY, UK
Phone: +44 1279 63 55 33
Fax: +44 1279 62 50 29
Email: sales@jumo.co.uk
Internet: www.jumo.co.uk

JUMO Process Control, Inc.
6724 Joy Road
East Syracuse, NY 13057, USA
Phone: +1 315 437 5866
Fax: +1 315 437 5860
Email: info.us@jumo.net
Internet: www.jumousa.com

EMF-133, EMF-134, EMF-233, EMF-234, EMF-333, EMF-444, EMF-544

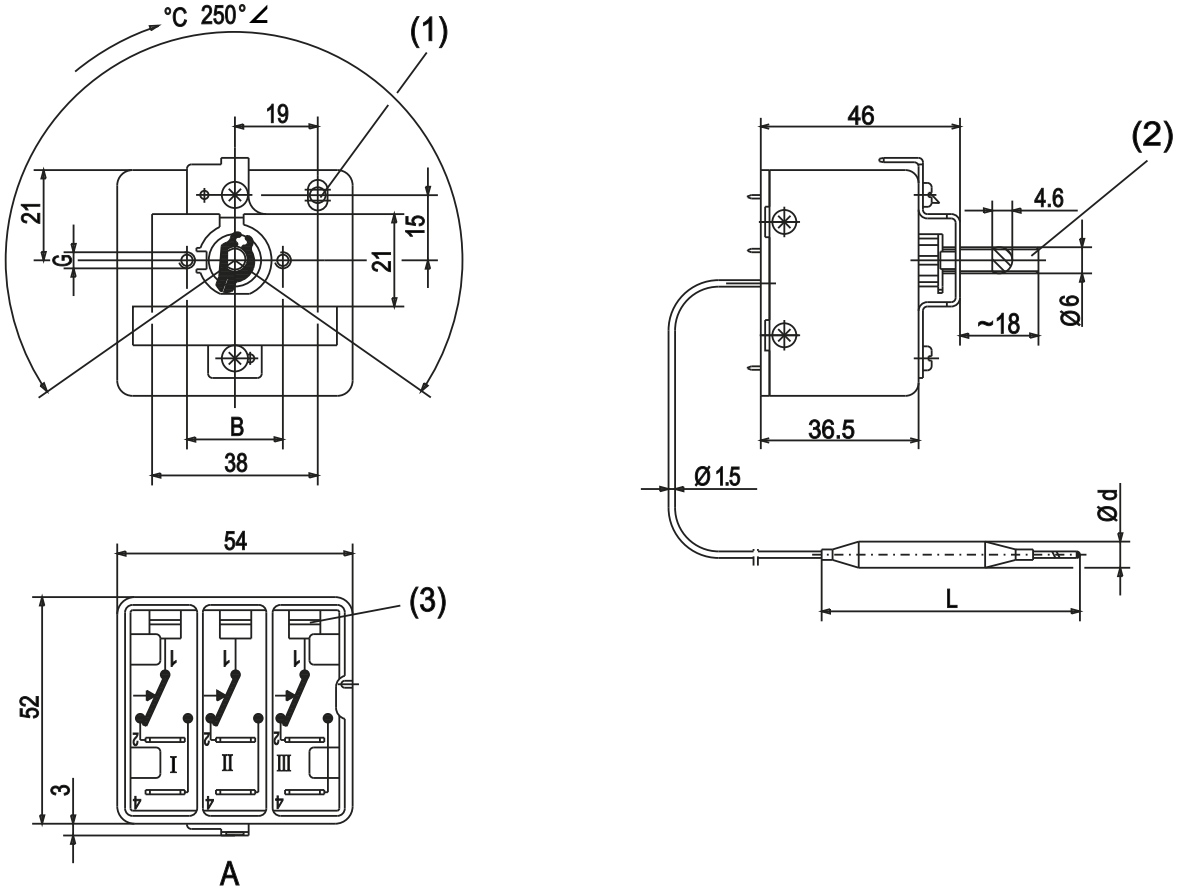

(1) Restart knob only with abbreviation 444, 544

(2) Not applicable with abbreviation 2, 3, 4, 5

(3) Tab connector DIN 46244-A6,3-0,8

(A) Rear view

JUMO GmbH & Co. KG
Delivery address: Mackenrodtstraße 14
36039 Fulda, Germany
Postal address: 36035 Fulda, Germany
Phone: +49 661 6003-0
Fax: +49 661 6003-607
Email: mail@jumo.net
Internet: www.jumo.net

JUMO Instrument Co. Ltd.
JUMO House
Temple Bank, Riverway
Harlow, Essex, CM20 2DY, UK
Phone: +44 1279 63 55 33
Fax: +44 1279 62 50 29
Email: sales@jumo.co.uk
Internet: www.jumo.co.uk

JUMO Process Control, Inc.
6724 Joy Road
East Syracuse, NY 13057, USA
Phone: +1 315 437 5866
Fax: +1 315 437 5860
Email: info.us@jumo.net
Internet: www.jumousa.com

EMF-1333, EMF-2333, EMF-3333

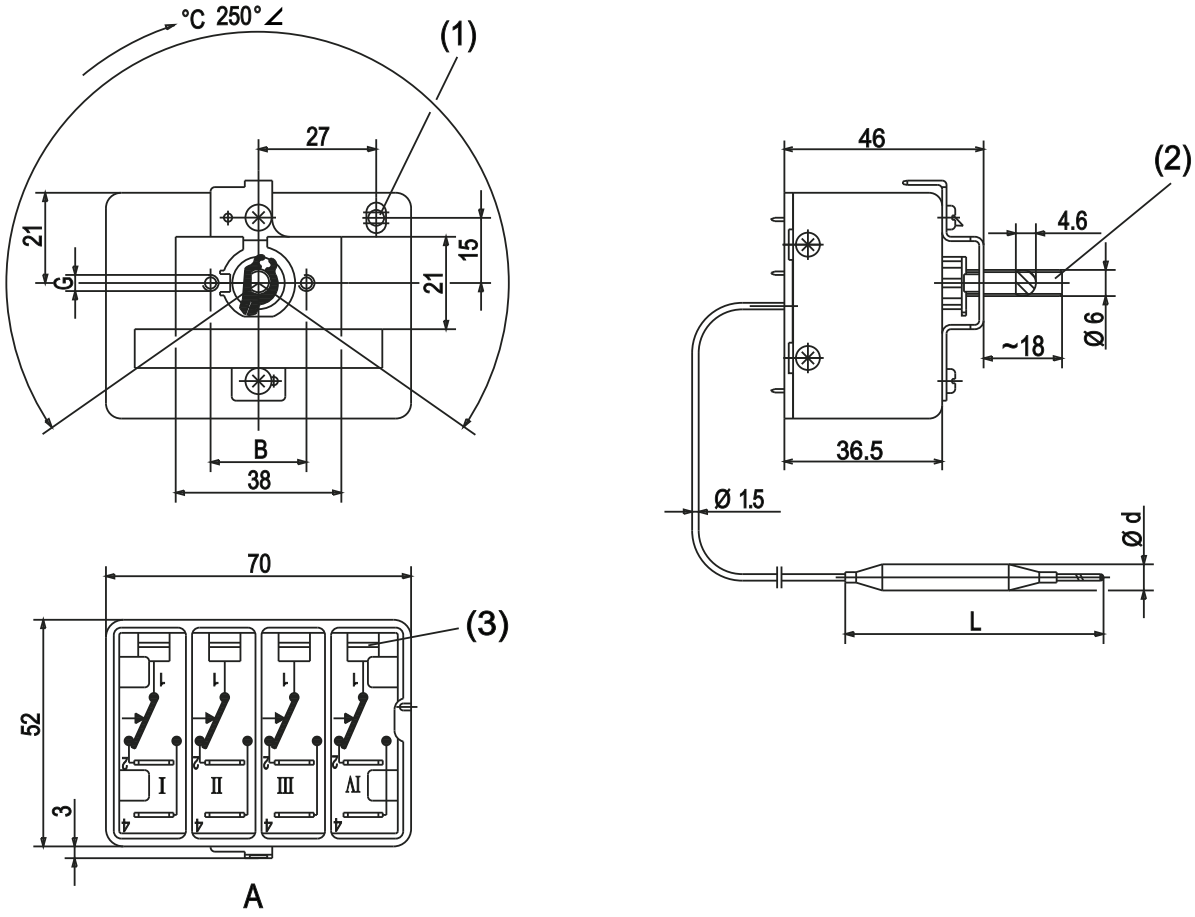

(1) Restart knob only with abbreviation 4444

(2) Not applicable with abbreviation 2, 3, 4, 5

(3) Tab connector DIN 46244-A6,3-0,8

(A) Rear view

	B	G
Standard	22	M3
Extra code 704	28	M4
Extra code 705	33	M3

Screw connection EM-1, extra code 699

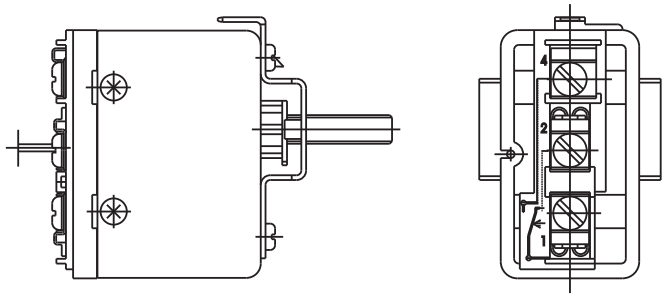

JUMO GmbH & Co. KG
Delivery address: Mackenrodtstraße 14
36039 Fulda, Germany
Postal address: 36035 Fulda, Germany
Phone: +49 661 6003-0
Fax: +49 661 6003-607
Email: mail@jumo.net
Internet: www.jumo.net

JUMO Instrument Co. Ltd.
JUMO House
Temple Bank, Riverway
Harlow, Essex, CM20 2DY, UK
Phone: +44 1279 63 55 33
Fax: +44 1279 62 50 29
Email: sales@jumo.co.uk
Internet: www.jumo.co.uk

JUMO Process Control, Inc.
6724 Joy Road
East Syracuse, NY 13057, USA
Phone: +1 315 437 5866
Fax: +1 315 437 5860
Email: info.us@jumo.net
Internet: www.jumousa.com

Connection diagram

The connection diagram in the data sheet provides information on product selection.

For the electrical connection, only use the installation instructions or the operating manual.

EM-1, EM-2, EM-3

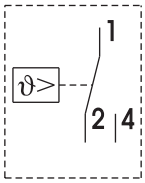

EM-4, EM-5

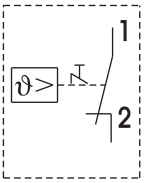

EM-13, EM-23, EM-33

Setpoint: I
Sequence contact: II

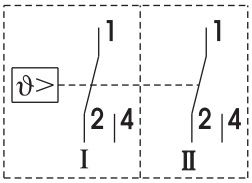

EM-4/574, EM-5/574

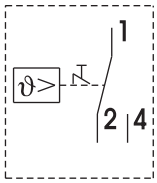

EMF-133, EMF-233, EMF-333

Setpoint: I
Sequence contact: II, III

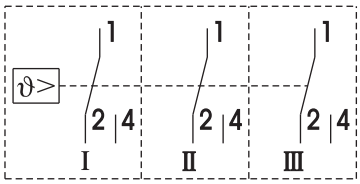

EM-40, EM-50

n.c. (break) contact
on measuring system failure
and T < -10 °C: I
Limit value: II

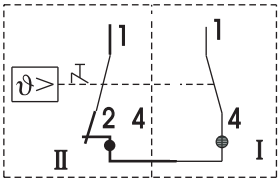

EMF-1333, EMF-2333, EMF-3333

Setpoint: I
Squence contact: II, III, IV

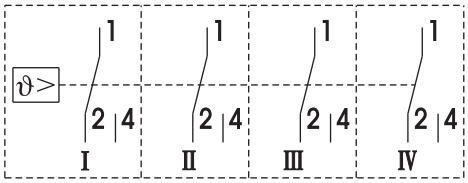

EM-40/574, EM-50/574

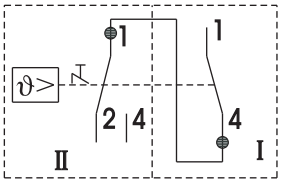

EM-20, EM-30

n.c. (break) contact
on measuring system failure
and T < -10 °C: I
Limit value: II

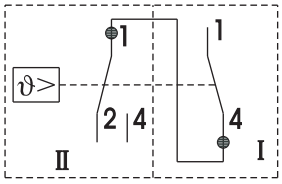

Example EMF-1334

For additional type variants, the connection diagrams are combined appropriately.

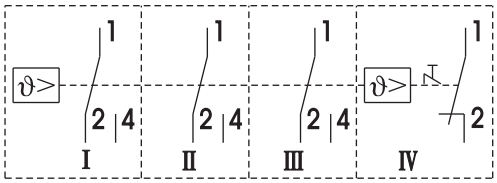

JUMO GmbH & Co. KG
Delivery address: Mackenrodtstraße 14
36039 Fulda, Germany
Postal address: 36035 Fulda, Germany
Phone: +49 661 6003-0
Fax: +49 661 6003-607
Email: mail@jumo.net
Internet: www.jumo.net

JUMO Instrument Co. Ltd.
JUMO House
Temple Bank, Riverway
Harlow, Essex, CM20 2DY, UK
Phone: +44 1279 63 55 33
Fax: +44 1279 62 50 29
Email: sales@jumo.co.uk
Internet: www.jumo.co.uk

JUMO Process Control, Inc.
6724 Joy Road
East Syracuse, NY 13057, USA
Phone: +1 315 437 5866
Fax: +1 315 437 5860
Email: info.us@jumo.net
Internet: www.jumousa.com

Temperature compensation

Any change in the temperature at the switching head from the 22 °C calibration ambient temperature will produce a deviation of the switching point. For ambient temperatures that fluctuate strongly, it is advisable to use thermostats with temperature compensation ("TK"; extra code 707).

The switching point deviation depends on the ambient temperature at the switching head and takes the switching differential into consideration. **The temperature influence on the capillary is not yet taken into account and can result in an additional error.**

Version **without** temperature compensation

Scale limit value < 200 °C

EM 1-pole, EM 2-pole

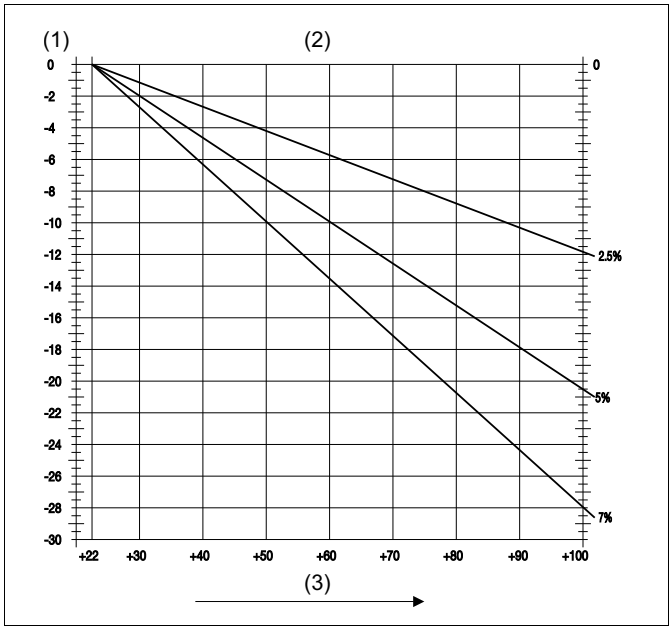

(1) % of the control range

(2) Without temperature compensation

(3) Ambient temperature [°C]

Version **with** temperature compensation

Scale limit value < 200 °C

EM 1-pole temperature compensation TK

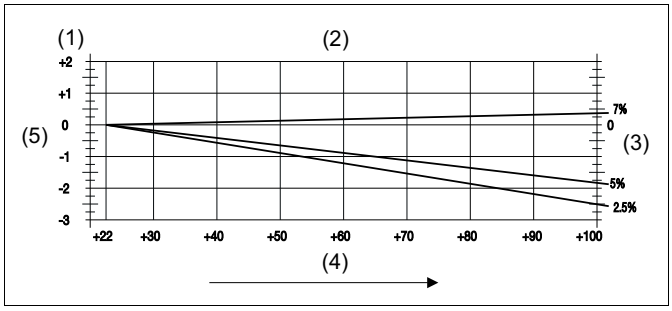

Note:

Additional graphs of the temperature compensation TK with higher scale limit values and for the EM 2-pole version are available upon request.

(1) % of the control range

(2) With temperature compensation

(3) Switching differential

(4) Ambient temperature [°C]

(5) Switching setpoint deviation

JUMO GmbH & Co. KG
Delivery address: Mackenrodtstraße 14
36039 Fulda, Germany
Postal address: 36035 Fulda, Germany
Phone: +49 661 6003-0
Fax: +49 661 6003-607
Email: mail@jumo.net
Internet: www.jumo.net

JUMO Instrument Co. Ltd.
JUMO House
Temple Bank, Riverway
Harlow, Essex, CM20 2DY, UK
Phone: +44 1279 63 55 33
Fax: +44 1279 62 50 29
Email: sales@jumo.co.uk
Internet: www.jumo.co.uk

JUMO Process Control, Inc.
6724 Joy Road
East Syracuse, NY 13057, USA
Phone: +1 315 437 5866
Fax: +1 315 437 5860
Email: info.us@jumo.net
Internet: www.jumousa.com

Order details

	(1)	**Basic type**	
602021		Panel-mounted thermostats, EM Series	
	(2)	**Basic type extensions**	
0001		EM-1	Temperature controller (TR), 1-pole
0002		EM-2	Temperature monitor (TW), 1-pole
0003		EM-3	Temperature monitor (TW), permanently set, 1-pole
0004		EM-4	Temperature limiter (TB), permanently set, 1-pole
0005		EM-5	Temperature limiter (TB, 1-pole
0013		EM-13	Temperature controller (TR/TW), 2-pole
0014		EM-14	Temperature controller (TR/TB), 2-pole
0020		EM-20	Safety temperature monitor (STW (STB))
0023		EM-23	Temperature monitor (TR/TB), 2-pole
0024		EM-24	Temperature monitor (TW/TB), 2-pole
0030		EM-30	Safety temperature monitor (STW (STB)), permanently set
0033		EM-33	Temperature monitor (TW/TW), 2-pole
0040		EM-40	Safety temperature limiter (STB), permanently set
0044		EM-44	Temperature limiter (TB/TB), 2-pole
0050		EM-50	Safety temperature limiter (STB)
0054		EMF-54	Temperature limiter (TB/TB), 2-pole
0133		EMF-133	Temperature controller (TR/TW/TW), 3-pole
0134		EMF-134	Temperature controller (TR/TW/TB), 3-pole
0233		EMF-233	Temperature monitor (TW/TW/TW), 3-pole
0333		EMF-333	Temperature monitor (TW/TW/TW), 3-pole
0444		EMF-444	Temperature limiter (TB/TB/TB), 3-pole
0544		EMF-544	Temperature limiter (TB/TB/TB), 3-pole
1333		EMF-1333	Temperature controller (TR/TW/TW/TW), 4-pole
2333		EMF-2333	Temperature monitor (TW/TW/TW/TW), 4-pole
3333		EMF-3333	Temperature monitor (TW/TW/TW/TW), 4-pole
	(3)	**Control range (TW)**	
000		For permanently set limit value	
013		-20 to +40 °C	
021		0 to 50 °C	
025		0 to 100 °C	
027		0 to 150 °C	
028		0 to 200 °C	
041		20 to 90 °C	
045		20 to 400 °C	
046		20 to 500 °C	
052		30 to 110 °C	
062		50 to 200 °C	
063		50 to 250 °C	
064		50 to 300 °C	
075		75 to 100 °C	
085		85 to 110 °C	
090		120 to 150 °C	
091		160 to 200 °C	
092		210 to 300 °C	
094		250 to 300 °C	
095		300 to 400 °C	

JUMO GmbH & Co. KG
Delivery address: Mackenrodtstraße 14
36039 Fulda, Germany
Postal address: 36035 Fulda, Germany
Phone: +49 661 6003-0
Fax: +49 661 6003-607
Email: mail@jumo.net
Internet: www.jumo.net

JUMO Instrument Co. Ltd.
JUMO House
Temple Bank, Riverway
Harlow, Essex, CM20 2DY, UK
Phone: +44 1279 63 55 33
Fax: +44 1279 62 50 29
Email: sales@jumo.co.uk
Internet: www.jumo.co.uk

JUMO Process Control, Inc.
6724 Joy Road
East Syracuse, NY 13057, USA
Phone: +1 315 437 5866
Fax: +1 315 437 5860
Email: info.us@jumo.net
Internet: www.jumousa.com

096		350 to 500 °C	
	(4)	**Limit value (STW/STB)**	
000		For adjustable control range	
100		100 °C	
95		95 °C	
	(5)	**Switching differential**	
00		None	
		With liquid-filled measuring system	
10		1 %	Only with TR and TW
25		2.5 %	Only with TR and TW
50		5 %	Only with TR, TW and STW
70		7 %	Only with TR, TW and STW
		With gas-filled measuring system	
30		3 %	Only with TR and TW
50		5 %	Only with TR, TW and STW
60		6 %	Only with TR and TW
01		10 %	Only with TR and TW
	(6)	**Capillary length**	
0		None	
1000		1,000 mm	
2000		2,000 mm	
3000		3,000 mm	
4000		4,000 mm	
5000		5,000 mm	
	(7)	**Capillary material**	
20		CrNi (stainless steel)	
40		Cu (copper)	
	(8)	**Process connection**	
10		Plain cylindrical probe	
20		Screw-in protection tube	
	(9)	**Thread of process connection**	
00		None	
13		G 1/2	
	(10)	**Process connection material**	
00		None	
20		CrNi (stainless steel)	
40		CuZn (brass)	
	(11)	**Insertion length**	
000		None	
100		100 mm	
120		120 mm	
150		150 mm	
200		200 mm	
300		300 mm	
	(12)	**Protection tube diameter**	
00		None	
10		10 mm	
8		8 mm	

JUMO GmbH & Co. KG
Delivery address: Mackenrodtstraße 14
36039 Fulda, Germany
Postal address: 36035 Fulda, Germany
Phone: +49 661 6003-0
Fax: +49 661 6003-607
Email: mail@jumo.net
Internet: www.jumo.net

JUMO Instrument Co. Ltd.
JUMO House
Temple Bank, Riverway
Harlow, Essex, CM20 2DY, UK
Phone: +44 1279 63 55 33
Fax: +44 1279 62 50 29
Email: sales@jumo.co.uk
Internet: www.jumo.co.uk

JUMO Process Control, Inc.
6724 Joy Road
East Syracuse, NY 13057, USA
Phone: +1 315 437 5866
Fax: +1 315 437 5860
Email: info.us@jumo.net
Internet: www.jumousa.com

	(13)	**Probe diameter**
6		6 mm
8		8 mm
	(14)	**Extra codes**
000		None
025		Central mounting M10 × 1, metall
574		Microswitch with N/C contact, restart lock, and additional signal contact (only for TB and STB)
699		Screw connection up to 2.5 mm²
702		Snap-action contact, gold-plated
704		Switching head mounting with 2 M4 screws, spaced 28 mm
705		Switching head mounting with 2 M3 screws, spaced 33 mm
707		Temperature compensation
710		Central mounting M10 × 1, standard
950		Railway application

	(1)		(2)		(3)		(4)		(5)		(6)		(7)		(8)	
Order code		/		-		-		-		-		-		-		-
Order example	602021	/	0005	-	052	-	000	-	00	-	2000	-	40	-	10	-

(9)		(10)		(11)		(12)		(13)		(14)	
	-		-		-		-		/		, ...[a]
00	-	00	-	000	-	00	-	6	/	574	

[a] List extra codes in sequence, separated by commas.

Sequence contact gap for 2-pole, 3-pole, and 4-pole devices: Specify in plain text (e.g. +2 °C, +5 °C, +8 °C)

Further process connections and protection tubes see data sheet 606710.

JUMO GmbH & Co. KG
Delivery address: Mackenrodtstraße 14
36039 Fulda, Germany
Postal address: 36035 Fulda, Germany
Phone: +49 661 6003-0
Fax: +49 661 6003-607
Email: mail@jumo.net
Internet: www.jumo.net

JUMO Instrument Co. Ltd.
JUMO House
Temple Bank, Riverway
Harlow, Essex, CM20 2DY, UK
Phone: +44 1279 63 55 33
Fax: +44 1279 62 50 29
Email: sales@jumo.co.uk
Internet: www.jumo.co.uk

JUMO Process Control, Inc.
6724 Joy Road
East Syracuse, NY 13057, USA
Phone: +1 315 437 5866
Fax: +1 315 437 5860
Email: info.us@jumo.net
Internet: www.jumousa.com

Stock versions

Order code	Control range (TW)	Capillary length	Probe-Ø	Part no.
602021/0001-013-000-25-2000-40-10-00-00-000-00-6/000	-20 to +40 °C	2,000 mm	6 mm	60001231
602021/0001-021-000-25-1000-40-10-00-00-000-00-6/000	0 to 50 °C	1,000 mm	6 mm	60000492
602021/0001-041-000-70-1000-40-10-00-00-000-00-6/000	20 to 90 °C	1,000 mm	6 mm	60000493
602021/0001-025-000-25-1000-40-10-00-00-000-00-6/000	0 to 100 °C	1,000 mm	6 mm	60000494
602021/0001-025-000-25-2000-40-10-00-00-000-00-6/000	0 to 100 °C	2,000 mm	6 mm	60000219
602021/0001-052-000-70-1000-40-10-00-00-000-00-6/000	30 to 110 °C	1,000 mm	6 mm	60000285
602021/0001-027-000-25-1000-40-10-00-00-000-00-6/000	0 to 150 °C	1,000 mm	6 mm	60000921
602021/0001-027-000-25-2000-40-10-00-00-000-00-6/000	0 to 150 °C	2,000 mm	6 mm	60000217
602021/0001-028-000-25-1000-40-10-00-00-000-00-6/000	0 to 200 °C	1,000 mm	6 mm	60001141
602021/0001-028-000-25-2000-40-10-00-00-000-00-6/000	0 to 200 °C	2,000 mm	6 mm	60000220
602021/0001-064-000-25-1000-40-10-00-00-000-00-6/000	50 to 300 °C	1,000 mm	6 mm	60000495
602021/0001-064-000-25-2000-40-10-00-00-000-00-6/000	50 to 300 °C	2,000 mm	6 mm	60000923
602021/0001-046-000-50-1000-20-10-00-00-000-00-8/000	20 to 500 °C	1,000 mm	8 mm	60002083
602021/0002-021-000-25-1000-40-10-00-00-000-00-6/000	0 to 50 °C	1,000 mm	6 mm	60000214
602021/0002-027-000-25-1000-40-10-00-00-000-00-6/000	0 to 150 °C	1,000 mm	6 mm	60000497
602021/0002-027-000-25-2000-40-10-00-00-000-00-6/000	0 to 150 °C	2,000 mm	6 mm	60000213
602021/0002-028-000-25-1000-40-10-00-00-000-00-6/000	0 to 200 °C	1,000 mm	6 mm	60001263
602021/0002-064-000-25-1000-40-10-00-00-000-00-6/000	50 to 300 °C	1,000 mm	6 mm	60001380
602021/0002-046-000-50-1000-20-10-00-00-000-00-8/000	20 to 500 °C	1,000 mm	8 mm	60002084
602021/0002-046-000-50-2000-20-10-00-00-000-00-8/000	20 to 500 °C	2,000 mm	8 mm	60002112
602021/0005-027-000-25-1000-40-10-00-00-000-00-6/000	0 to 150 °C	1,000 mm	6 mm	60000924
602021/0005-028-000-25-1000-40-10-00-00-000-00-6/000	0 to 200 °C	1,000 mm	6 mm	60000929
602021/0005-064-000-25-1000-40-10-00-00-000-00-6/000	50 to 300 °C	1,000 mm	6 mm	60000211
602021/0005-046-000-50-1000-20-10-00-00-000-00-8/000	20 to 500 °C	1,000 mm	8 mm	60002085
602021/0050-095-000-00-1000-20-10-00-00-000-00-6/025, 574	300 to 400 °C	1,000 mm	6 mm	60002244
602021/0050-096-000-00-1000-20-10-00-00-000-00-6/025, 574	350 to 500 °C	1,000 mm	6 mm	60002245

JUMO GmbH & Co. KG
Delivery address: Mackenrodtstraße 14
36039 Fulda, Germany
Postal address: 36035 Fulda, Germany
Phone: +49 661 6003-0
Fax: +49 661 6003-607
E-mail: mail@jumo.net
Internet: www.jumo.net

JUMO Instrument Co. Ltd.
JUMO House
Temple Bank, Riverway
Harlow, Essex CM20 2DY, UK
Phone: +44 1279 635533
Fax: +44 1279 635262
E-mail: sales@jumo.co.uk
Internet: www.jumo.co.uk

JUMO Process Control, Inc.
6733 Myers Road
East Syracuse, NY 13057, USA
Phone: 315-437-5866
1-800-554-5866
Fax: 315-437-5860
E-mail: info.us@jumo.net
Internet: www.jumousa.com

Panel-mounting thermostats, type series EM

Particularities

- Operating temperature limiter
- Limit value range up to +650 °C
- with temperature compensation

Brief description

Panel-mounting thermostats EM are used to monitor thermal processes. The devices are available as temperature monitor (TW), limiter (TB) and safety temperature limiter (STB). In the event of a malfunction, the STB switches the monitored machine line to an operational safe status.

Panel-mounting thermostats operate according to the fluid expansion principle. The electrical switching element is a microswitch.

Types	**EM-2/707**	**EM-5/707**	**EM-50/707**
	Temperature monitor (TW)	Temperature limiter (TB)	Safety temperature limiter (STB)

Switching function	**TW**	**Restart lock of the TB and STB**	**Self-monitoring of the STB**
	If the temperature exceeds the limit value set on the temperature probe, the current circuit is opened via a snap switch. The switch is reset to its original status once the set limit value is gone below (by the hysteresis).	If the temperature exceeds the limit value set on the temperature probe, a snap switch is actuated and locked mechanically. Once the limit value is gone below by approx. 100 *K,* the snap switch can be manually unlocked.	When the temperature probe cools down below -10 °C, the snap switch is also actuated. The current circuit automatically closes again when the temperature rises. In the event of a measuring system break (leaks), the snap switch is permanently actuated and mechanically locked.

Approvals/approval marks (see "Technical data")

EAC

JUMO GmbH & Co. KG
Delivery address: Mackenrodtstraße 14
36039 Fulda, Germany
Postal address: 36035 Fulda, Germany
Phone: +49 661 6003-0
Fax: +49 661 6003-607
E-mail: mail@jumo.net
Internet: www.jumo.net

JUMO Instrument Co. Ltd.
JUMO House
Temple Bank, Riverway
Harlow, Essex CM20 2DY, UK
Phone: +44 1279 635533
Fax: +44 1279 635262
E-mail: sales@jumo.co.uk
Internet: www.jumo.co.uk

JUMO Process Control, Inc.
6733 Myers Road
East Syracuse, NY 13057, USA
Phone: 315-437-5866
1-800-554-5866
Fax: 315-437-5860
E-mail: info.us@jumo.net
Internet: www.jumousa.com

Technical Data

Limit value ranges	Control / limit value range °C	Hysteresis K	Scale range ° ⊥
TW and TB	+230...+650	50 - 80 (TW)	250
STB	+500...+650	-	70

Capillary and temperature probe

Capillary	Length	Diameter	min. bending radius	Material
	standard: 1 m maximum: 3 m	1.5 mm	5 mm	Stainless steel

Temperature probe	Process connection*	Probe length x Diameter	Material
	plain cylindrical probe "10“ (standard)	115 x 8 mm	high-temperature resistant stainless steel, welded

* For different process connections and sheaths refer to data sheet 606710 (only 50, 52 and 54).

Electrical data

Switching element 1-pole snap switch	**EM-2/707**	**EM-5/707** **EM-50/707**	**EM-5/707/574** **EM-50/707/574**
	Microswitch with change-over contact	Microswitch with N/C contact and restart lock	Microswitch with N/C contact, restart lock and additional signal contact
maximum contact rating	**Switching function**	**N/C contact, terminal 2**	**N/O contact, terminal 4**
	TW	AC 230 V +10%, 16 (3) A, cos φ = 1 (0.6) DC 230 V +10%, 0.25A	AC 230 V +10%, 8 (1.5) A, cos φ = 1 (0.6) DC 230 V +10%, 0.25A
	TB, STB		AC 230 V +10%, 2 (1) A, cos φ = 1 (0.6) DC 230 V +10%, 0.25A
Contact reliability	To ensure a high switching reliability, we recommend a minimum load of: AC/DC = 24 V, 100 mA		
Rating surge voltage	1500 V (via the switching contacts 400 V)		
Overvoltage category	II		
Required fuse rating	refer to maximum contact rating		
Electrical connection	serial	Tab connector A 6.3 x 0.6 DIN 46 244	
	Extra code 699	Screw-connection up to 2.5 mm^2 cable cross section (against surcharge) – also suitable for retrofitting –	

JUMO GmbH & Co. KG
Delivery address: Mackenrodtstraße 14
36039 Fulda, Germany
Postal address: 36035 Fulda, Germany
Phone: +49 661 6003-0
Fax: +49 661 6003-607
E-mail: mail@jumo.net
Internet: www.jumo.net

JUMO Instrument Co. Ltd.
JUMO House
Temple Bank, Riverway
Harlow, Essex CM20 2DY, UK
Phone: +44 1279 635533
Fax: +44 1279 635262
E-mail: sales@jumo.co.uk
Internet: www.jumo.co.uk

JUMO Process Control, Inc.
6733 Myers Road
East Syracuse, NY 13057, USA
Phone: 315-437-5866
1-800-554-5866
Fax: 315-437-5860
E-mail: info.us@jumo.net
Internet: www.jumousa.com

Operating data

Switching point accuracy	(in % from the scale range; referring to the set point or limit value at T_u +22 °C, with increasing temperature)		
	Switching function	Type	accuracy in the upper third of the scale or limit value
	TW	EM-2/707	$^{+0}_{-18}$K
	TB	EM-5/TK, EM-5/707/574	$^{+0}_{-48}$K
	STB	EM-50/TK, EM-50/707/574	$^{+0}_{-48}$K
Average ambient temperature influence (referring to the limit value)	When the ambient temperature [Δt] on the switch head and the capillary deviates from the calibration temperature +22 °C, a switch point offset t_V occurs. Higher ambient temperatures = lower switching point Lower ambient temperature = higher switching point		
	on the switch head: $t_V = 0.06 \cdot \Delta t$		on the capillary: $t_V = 0.33 \cdot \Delta t \cdot m$
	If the operating temperature on the switch head and capillary deviates essentially from the calibration temperature +22 °C, it can be taken into account during adjustment on request against surcharge.		
admissible ambient temperature	during use		admissible storage temperature
	on the switch head and capillary	on the probe	
	max. +100 °C / min. -40 °C	max. +750 °C / min. -40 °C	max. +50 °C / min. -50 °C
Rated position	any		

Case

Material	Sheet steel, galvanized
Fastening	serial with 2 M 3 screws, spacing 22 mm
	Extra code 704 with 2 M 4 screws, spacing 28 mm
	Extra code 705 with 2 M 3 screws, spacing 33 mm
	Extra code 710 Central fastening M 10 x 1 with acorn nut (only for TB and STB)
Limit value setting	Switching point can adjusted by means of a screwdriver
Protection type	EN 60529-IP 00
Weight	approx. 0.3 kg

Approvals/approval marks

Approval marks	Inspection authority	Certificates/ inspection number	Inspection basis	Valid for
EAC[a]	Gost Norm AG	TC RU C-DE.AB98.B.00348	Technical rules of the customs union Russia/ Belarus/Kazakhstan	EM-...

[a] Russian documentation upon request

JUMO GmbH & Co. KG
Delivery address: Mackenrodtstraße 14
36039 Fulda, Germany
Postal address: 36035 Fulda, Germany
Phone: +49 661 6003-0
Fax: +49 661 6003-607
E-mail: mail@jumo.net
Internet: www.jumo.net

JUMO Instrument Co. Ltd.
JUMO House
Temple Bank, Riverway
Harlow, Essex CM20 2DY, UK
Phone: +44 1279 635533
Fax: +44 1279 635262
E-mail: sales@jumo.co.uk
Internet: www.jumo.co.uk

JUMO Process Control, Inc.
6733 Myers Road
East Syracuse, NY 13057, USA
Phone: 315-437-5866
1-800-554-5866
Fax: 315-437-5860
E-mail: info.us@jumo.net
Internet: www.jumousa.com

Wiring diagrams

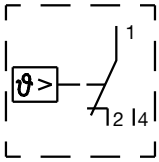

EM-2/707

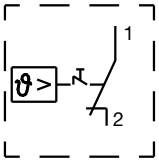

EM-5/707

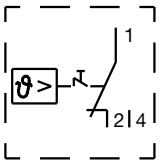

EM-5/707/574

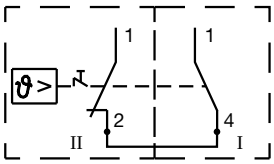

EM-50/707

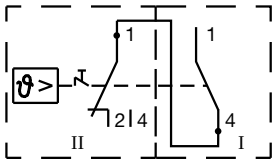

EM-50/707/574

Dimensions

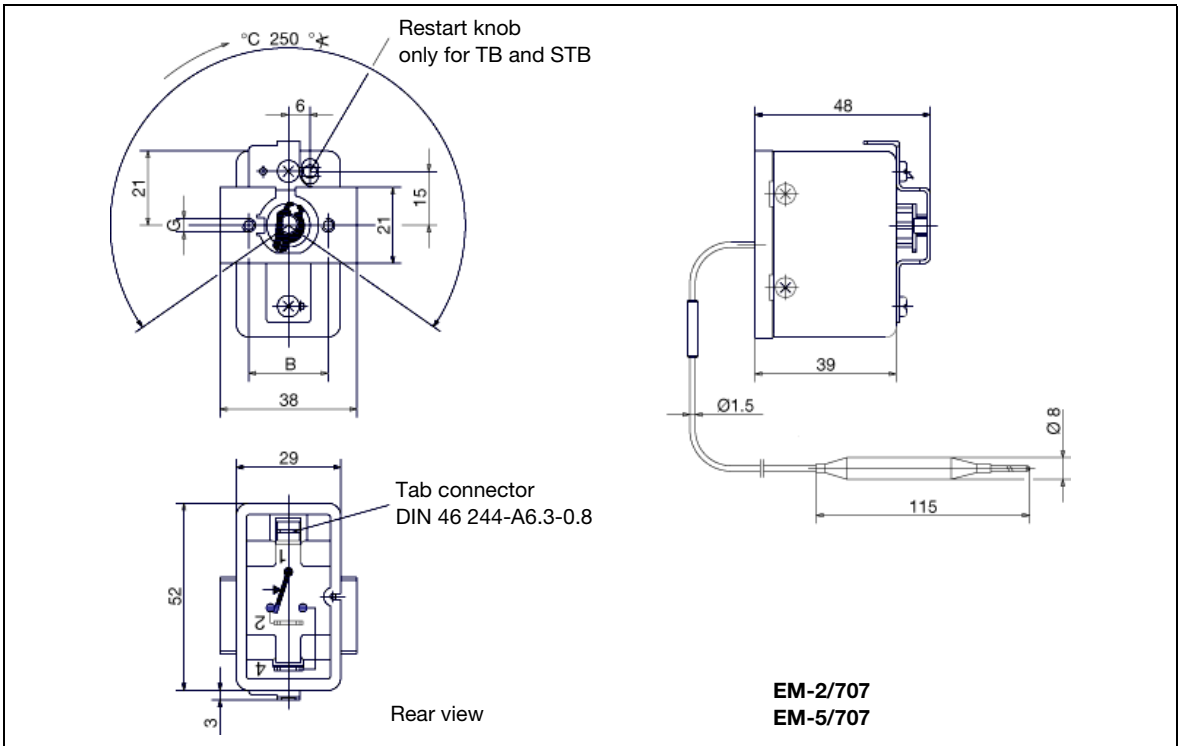

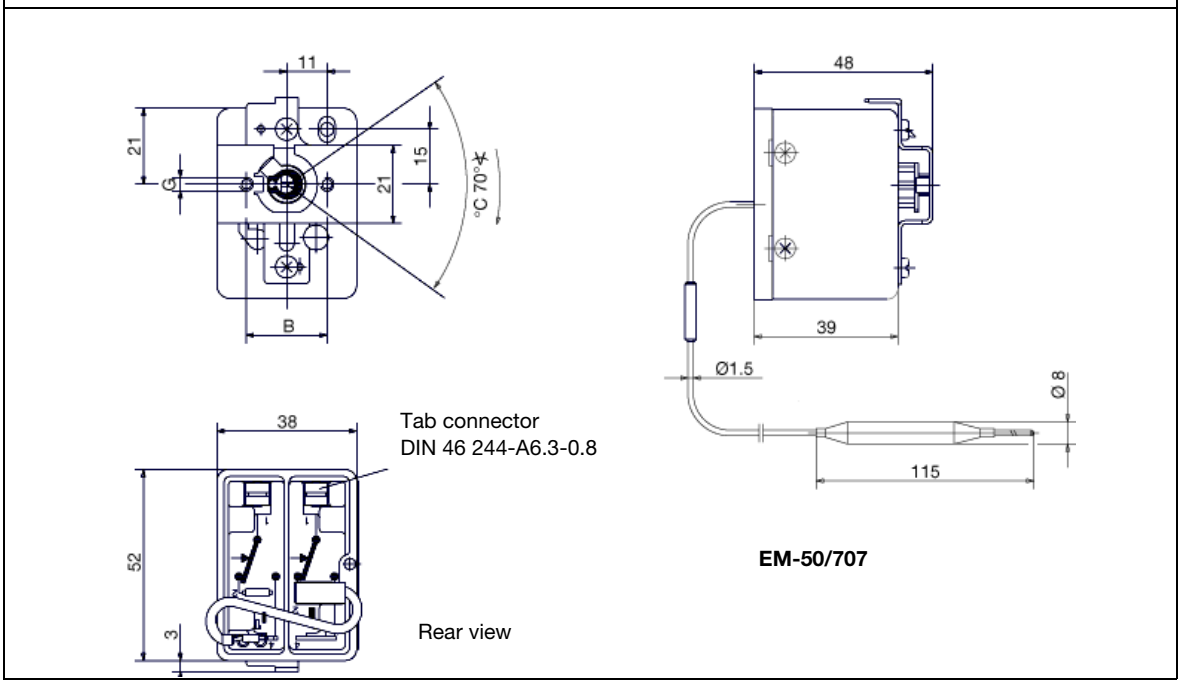

Extra code	B	G
serial	22 mm	M3
704	28 mm	M4
705	33 mm	M3

JUMO GmbH & Co. KG
Delivery address: Mackenrodtstraße 14
36039 Fulda, Germany
Postal address: 36035 Fulda, Germany
Phone: +49 661 6003-0
Fax: +49 661 6003-607
E-mail: mail@jumo.net
Internet: www.jumo.net

JUMO Instrument Co. Ltd.
JUMO House
Temple Bank, Riverway
Harlow, Essex CM20 2DY, UK
Phone: +44 1279 635533
Fax: +44 1279 635262
E-mail: sales@jumo.co.uk
Internet: www.jumo.co.uk

JUMO Process Control, Inc.
6733 Myers Road
East Syracuse, NY 13057, USA
Phone: 315-437-5866
1-800-554-5866
Fax: 315-437-5860
E-mail: info.us@jumo.net
Internet: www.jumousa.com

Stock versions

(Delivery within 3 working days after receipt of order)

Part no.	Type	Limit value °C	Capillary mm	Process connection	Probe Ø x length mm
60003016	EM-2/707	+230...+650	2000	„10“ plain cylindrical probe	8 x 115

Order details

EM type series:

Order code		
	(1)	**Basic type**
602025		Panel-mounting thermostat, type series EM up to +650 °C
	(2)	**Basic type extensions**
0002		EM-2/707 Temperature monitor
0005		EM-5/707 Temperature limiter
0050		EM-50/707 Safety temperature limiter
	(3)	**Control / limit value ranges**
093		+230...+650 °C (only for TW and TB)
097		+500...+650 °C (only for STB)
	(4)	**Capillary length** (specifications in mm)
1000		1000 mm
2000		2000 mm
3000		3000 mm
. . . .		Special length, specification in mm (max. 3000 mm)
	(5)	**Process connection ***
10		plain cylindrical probe
		* For different process connections and sheaths see data sheet 606710 (only 50, 52 and 54)
	(6)	**Diameter "d" (probe diameter)**
8		8 mm
	(7)	**Extra codes [1]**
000		without extra codes
574		"U" Microswitch with N/C contact, reactivation lock and additional signal contact (only for TB and STB)
699		"X" Screw connection up to 2.5 mm2 cable cross section
704		"b1" Switch head fastening with 2 M4 screws, spacing 28 mm
705		"b2" Switch head fastening with 2 M3 screws, spacing 33 mm
707		"TK“ Temperature compensation
710		"b7" Central fastening with acorn nut (only for TB and STB)

Order code

(1)		(2)		(3)		(4)		(5)		(6)		(7)
602025	/	. .	-	. . .	-	. . . .	-	. .	-	.	/	. . .

Order example

602025	/	0050	-	097	-	1000	-	10	-	8	/	710[1]

[1] List extra codes in sequence, separated by commas.

JUMO GmbH & Co. KG
Delivery address: Mackenrodtstraße 14
36039 Fulda, Germany
Postal address: 36035 Fulda, Germany
Phone: +49 661 6003-0
Fax: +49 661 6003-607
E-mail: mail@jumo.net
Internet: www.jumo.net

JUMO Instrument Co. Ltd.
JUMO House
Temple Bank, Riverway
Harlow, Essex CM20 2DY, UK
Phone: +44 1279 635533
Fax: +44 1279 635262
E-mail: sales@jumo.co.uk
Internet: www.jumo.co.uk

JUMO Process Control, Inc.
6733 Myers Road
East Syracuse, NY 13057, USA
Phone: 315-437-5866
1-800-554-5866
Fax: 315-437-5860
E-mail: info.us@jumo.net
Internet: www.jumousa.com

Panel-Mounted Thermostat

EM Series

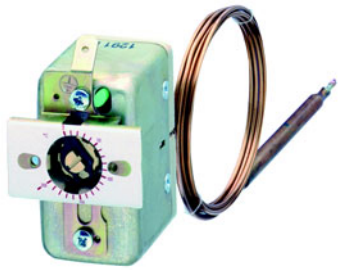

Special features

- Safety temperature monitor STW (STB)
- Safety temperature limiter STB
- Tested according to DIN EN 14597 and PED 2014/68/EU

Brief description

Panel-mounted thermostats are used to monitor thermal processes. The devices are available as a safety temperature monitor STW (STB) and a safety temperature limiter STB. In the event of a malfunction, the STB switches the monitored machine to a safe operating status.

Panel-mounted thermostats operate according to the fluid expansion principle — a microswitch is used as the electrical switching element.

Switching function

Safety temperature monitor STW (STB)
If the temperature on the temperature probe exceeds the setpoint value, the microswitch is activated by the transmission mechanics and the electrical circuit is opened or closed. If the temperature falls below the selected setpoint (by the amount of the switching differential), the microswitch is reset to its initial position.

Restart lock of the safety temperature limiter STB
If the temperature on the temperature probe exceeds the set limit value, the electrical circuit is opened and the microswitch is mechanically locked. The microswitch can be manually unlocked once the temperature has dropped by approx. 10 °C.

Self-monitoring for the safety temperature limiter STB and safety temperature monitor STW (STB)
If the measuring system is destroyed (i.e. if the expansion fluid leaks), the pressure in the diaphragm of the STB drops and permanently opens the electrical circuit. Unlocking is then no longer possible. The electrical circuit 1-2 opens when cooling the probe of STW (STB) and STB down to the negative temperature range, but it then closes again if the temperature rises. The STB must be unlocked manually if the minimum probe temperature is exceeded.

Use of the safety temperature monitor STW as a safety temperature limiter STB
The activation lock required by DIN EN 14597 must be warranted by the following circuit diagram. The circuit diagram must comply with DIN EN 50156.

Approvals/approval marks (see "Technical Data")

JUMO GmbH & Co. KG
Delivery address: Mackenrodtstraße 14
36039 Fulda, Germany
Postal address: 36035 Fulda, Germany
Phone: +49 661 6003-0
Fax: +49 661 6003-607
E-mail: mail@jumo.net
Internet: www.jumo.net

JUMO Instrument Co. Ltd.
JUMO House
Temple Bank, Riverway
Harlow, Essex CM20 2DY, UK
Phone: +44 1279 635533
Fax: +44 1279 635262
E-mail: sales@jumo.co.uk
Internet: www.jumo.co.uk

JUMO Process Control, Inc.
6733 Myers Road
East Syracuse, NY 13057, USA
Phone: 315-437-5866
1-800-554-5866
Fax: 315-437-5860
E-mail: info.us@jumo.net
Internet: www.jumousa.com

Technical data

General information

Limit value range, limit value range setting, and temperature probe

Type	Limit value range Limit value setting °C	Max. allowable probe temperature °C	Limit value tolerance °C	Probe length, dimension "L" for probe Ø "d"= 6 mm mm
EM-20-E	+40 to +110	+135	+0/-9	72
	+100 to +150	+173	+0/-8	85
	+110 to +170	+195	+0/-9	72
	+180 to +250	+288	+0/-13	60
	+230 to +300	+345	+0/-14	60
	Limit value setting done prior to mounting with a screwdriver at the limit value knob			
EM-30-E	Optional limit value +20 to +300 Permanently factory-set	Limit value +15 %		
EM-80	Optional limit value +60 to +180 Permanently factory-set	Limit value +15 %	+0/-5	84

Capillary and temperature probe

Type	Scale limit value	Capillary	Temperature probe	Notes
EM- . .	Up to 200 °C	Copper (Cu) ø 1.5 mm Material no. Cu-DHP	Copper (Cu) Material No. Cu-DHP Hard soldered	- -
	Up to 300 °C	Copper (Cu) ø 1.5 mm Material no. Cu-DHP	Stainless steel (CrNi) Material No. 1.4571 Hard soldered	- -
	Up to 300 °C	Stainless steel (CrNi) ø 1.5 mm	Stainless steel (CrNi) Material no. 1.4571 welded	Available at extra cost
Capillary length	Standard: 1000 mm, max. 5000 mm			
Min. bending radius of the capillary	5 mm			

Electrical data

Switching element: Single-pole snap-action switch	Type EM-20-E Type EM-30-E	Type EM-80 Standard	Type EM-80 with extra code "574"
	Microswitch with changeover contact	Microswitch with N/C contact and restart lock	Microswitch with N/C contact, restart lock, and additional signal contact
Max. switching capacity	Type	N/C contact, terminal 2	N/O contact, terminal 4
	EM-20-E EM-30-E EM-80/U	AC 230 V +10 %, 10 (2) A, cos φ = 1 (0.6) DC 230 V +10 %, 0.25A	AC 230 V +10 %, 2 (0.4) A, cos φ = 1 (0.6) DC 230 V +10 %, 0.25A
	EM-80		- -
	Extra code "574"	Microswitch with gold plating, AC / DC 24 V, 0.1 A	

Contact reliability	To ensure a high switching reliability, we recommend a minimum load of:	
	For silver contacts: AC / DC = 24 V, 20 mA	For gold-plated contacts (extra code "702"): AC / DC = 10 V, 5 mA
Rating surge voltage	1500 V (via the switching contacts 400 V)	
Overvoltage category	II	
Required fuse rating	See max. switching capacity	

JUMO GmbH & Co. KG
Delivery address: Mackenrodtstraße 14
36039 Fulda, Germany
Postal address: 36035 Fulda, Germany
Phone: +49 661 6003-0
Fax: +49 661 6003-607
E-mail: mail@jumo.net
Internet: www.jumo.net

JUMO Instrument Co. Ltd.
JUMO House
Temple Bank, Riverway
Harlow, Essex CM20 2DY, UK
Phone: +44 1279 635533
Fax: +44 1279 635262
E-mail: sales@jumo.co.uk
Internet: www.jumo.co.uk

JUMO Process Control, Inc.
6733 Myers Road
East Syracuse, NY 13057, USA
Phone: 315-437-5866
1-800-554-5866
Fax: 315-437-5860
E-mail: info.us@jumo.net
Internet: www.jumousa.com

Electrical connection	Standard	Tab connector A 6.3 x 0.8 DIN 46244	
	Extra code 699	Screw connection up to 2.5 mm^2 conductor cross section (available at extra cost) — also suitable for retrofitting —	
Switching differential in % from the limit value range	Switching function	Rated value	Possible actual value
	STW (STB)	7	7-8

Mid ambient temperature influence	(In % from the scale range) referring to the limit value. Deviation of the ambient temperature at the switching head and/or capillary from the +22 °C calibration ambient temperature produces a switching head offset. Higher ambient temperature = lower switching point Lower ambient temperature = higher switching point	
	For temperatures with scale limit value / limit value	
	< +200 °C	≥ +200 °C ≤ +350 °C
STW (STB)	Switching differential in %	
	7	7
	Ambient temperature influence on the switching head in %/°C	
	0.43	0.35
	Ambient temperature influence on the capillary in %/m	
	0.09 · °C · m	0.07 · °C · m
STB	Ambient temperature influence on the switching head: 0.35 °C/°C	
	Ambient temperature influence on the capillary in °C/m 0.07 °C/°C·m	

Temperature compensation	Extra code "707" For detailed information please refer to the graphical diagram on page 5.
Allowable storage temperature	-50 to +50 °C

Allowable ambient temperature when in use on the switching head and capillary	See nameplate
Rated position (NL)	Any

Switching head

Case material	Sheet steel, galvanized
Mounting	Extra code 704 with 2 M4 screws, spaced 28 mm Extra code 705 with 2 M3 screws, spaced 33 mm Extra code 706 with 2 M3 screws, spaced 22 mm (standard for EM-20-E and EM-30-E) Extra code 710, central mounting M10 x 1 with acorn nut (only for STB, standard for EM-80)
Protection type	EN 60 529-IP 00
Weight	Approx. 0.3 kg

Process connection[a]

EM series with capillary	**Plain cylindrical probe "10"** (standard)	
	Screw-in protection tube "20" (upon request)	
	Screw-in sleeve with screw-in spigot G 1/2 form A according to DIN 3852/2 and clamping piece with fixing screw for securing the probe	
Material	**Protection tube**	Up to +150 °C CuZn as a standard Over +150 °C CrNi
Insertion length S	Standard lengths: 100, 120, 150, 200, or 300 mm (different lengths upon request)	
Immersion tube Ø	D = 8 mm	

[a] For different process connections and thermowells refer to data sheet 606710.

JUMO GmbH & Co. KG
Delivery address: Mackenrodtstraße 14
36039 Fulda, Germany
Postal address: 36035 Fulda, Germany
Phone: +49 661 6003-0
Fax: +49 661 6003-607
E-mail: mail@jumo.net
Internet: www.jumo.net

JUMO Instrument Co. Ltd.
JUMO House
Temple Bank, Riverway
Harlow, Essex CM20 2DY, UK
Phone: +44 1279 635533
Fax: +44 1279 635262
E-mail: sales@jumo.co.uk
Internet: www.jumo.co.uk

JUMO Process Control, Inc.
6733 Myers Road
East Syracuse, NY 13057, USA
Phone: 315-437-5866
1-800-554-5866
Fax: 315-437-5860
E-mail: info.us@jumo.net
Internet: www.jumousa.com

Approvals / approval marks

Approval marks	Testing agency	Certificates / certification number	Inspection basics	Valid for
DIN	DIN CERTCO / TÜV Süd	STB 782	DIN EN 14597	EM-80
		STW (STB) 775 S		EM-20-E, EM-30-E
DIN	TÜV Süd	B_{10d} = 250.000[a]	DIN EN ISO 13849-1	EM-20-E, EM-30-E, EM-80
PED	TÜV Süd	Z-IS-TAF-MUC-18-06-2652099-07102504	2014/68/EU	EM-20-E, EM-30-E, EM-80
UL	UL	E66358	UL 873, CSA-C22.2 No. 24	EM-80
		MH45736	UL 353, CSA-C22.2 No. 24	EM-80
EAC[b]	Gost Norm AG	TC RU C-DE.AB98.B.00348	Technical rules of the customs union Russia/Belarus/ Kazakhstan	EM-...

[a] For further details see: Safety manual JUMO EM 602021, 602026.
[b] Russian documentation upon request.

Connection diagrams

EM-20-E
EM-30-E

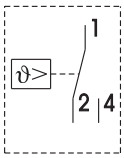

EM-80

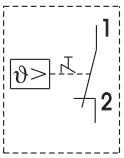

EM-80/U

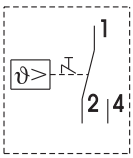

JUMO GmbH & Co. KG
Delivery address: Mackenrodtstraße 14
36039 Fulda, Germany
Postal address: 36035 Fulda, Germany
Phone: +49 661 6003-0
Fax: +49 661 6003-607
E-mail: mail@jumo.net
Internet: www.jumo.net

JUMO Instrument Co. Ltd.
JUMO House
Temple Bank, Riverway
Harlow, Essex CM20 2DY, UK
Phone: +44 1279 635533
Fax: +44 1279 635262
E-mail: sales@jumo.co.uk
Internet: www.jumo.co.uk

JUMO Process Control, Inc.
6733 Myers Road
East Syracuse, NY 13057, USA
Phone: 315-437-5866
1-800-554-5866
Fax: 315-437-5860
E-mail: info.us@jumo.net
Internet: www.jumousa.com

Dimensions

EM-80
with central mounting
(standard)

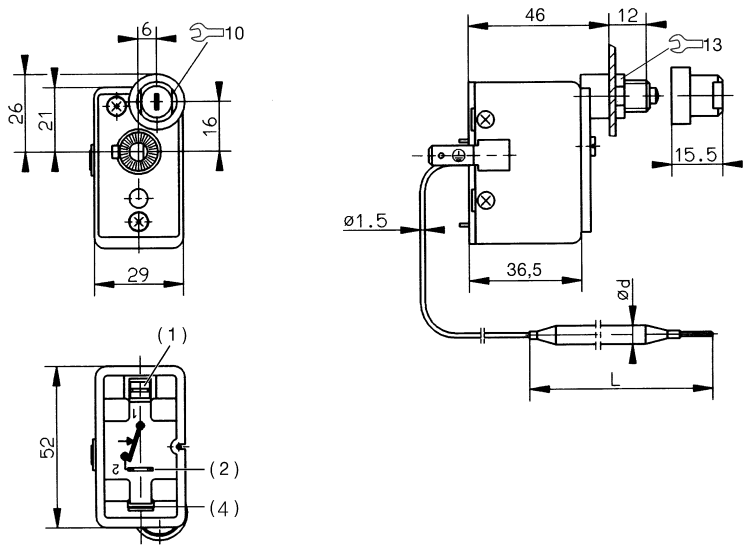

(1) + (2) = standard: Tab connector A 6.3 x 0.8 mm (DIN 46244)

(4) = only for extra code /574: Tab connector A 6.3 x 0.8 mm (DIN 46244)

EM-20-E
EM-30-E
EM-80
with fixing brackets

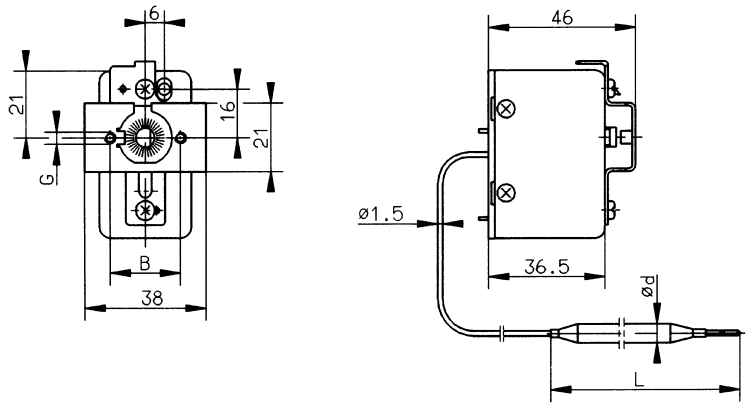

Abbreviation	B	G
704	28	M4
705	33	M3
706	22	M3

Temperature compensation (TK) (707)

If changes occur to the switching head temperature in relation to the calibration ambient temperature (= 22 °C), a switching point deviation occurs. For highly fluctuating ambient temperatures, we recommend the use of thermostats with temperature compensation (extra code 707)

EM-.. "without" temperature compensation (707)
Switching point deviation depends on the ambient temperature at the switching head taking the probe temperature into account.

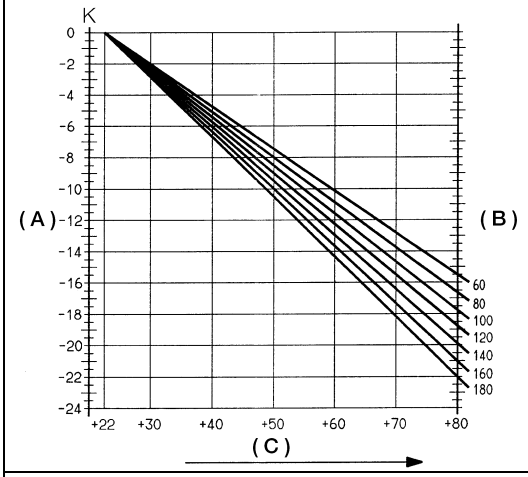

EM-../TK "with" temperature compensation (707)
Switching point deviation depends on the ambient temperature at the switching head taking the probe temperature into account.
The temperature influence on the capillary is not yet taken into account and can result in an additional error of approx. 0.07 °C°C/°C·m.

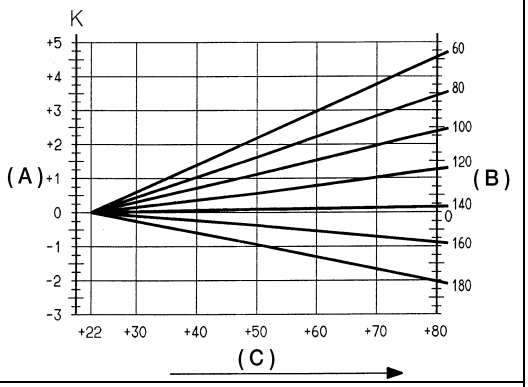

(A) = Switching point deviation **(B)** = Probe temperature in °C **(C)** = Ambient temperature in °C

JUMO GmbH & Co. KG
Delivery address: Mackenrodtstraße 14
36039 Fulda, Germany
Postal address: 36035 Fulda, Germany
Phone: +49 661 6003-0
Fax: +49 661 6003-607
E-mail: mail@jumo.net
Internet: www.jumo.net

JUMO Instrument Co. Ltd.
JUMO House
Temple Bank, Riverway
Harlow, Essex CM20 2DY, UK
Phone: +44 1279 635533
Fax: +44 1279 635262
E-mail: sales@jumo.co.uk
Internet: www.jumo.co.uk

JUMO Process Control, Inc.
6733 Myers Road
East Syracuse, NY 13057, USA
Phone: 315-437-5866
1-800-554-5866
Fax: 315-437-5860
E-mail: info.us@jumo.net
Internet: www.jumousa.com

Stock versions

Part no.	Type	Limit value °C	Capillary mm	Process connection	Probe Ø x length mm
60000775	EM-80	+110	1000	Plain cylindrical probe 10	6 x ~ 84
60000753	EM-80	+95			

(Delivery within 3 working days after receipt of order)

Order details

EM series as STW (STB) and STB

Order code		
	(1)	**Basic type**
602026		Panel-mounted thermostat, EM series
	(2)	**Basic type extensions**
20		EM-20-E Safety temperature monitor (STW), limit value adjustable[a]
30		EM-30-E Safety temperature monitor (STW), limit value permanently set
80		EM-80 Safety temperature limiter (STB), limit value permanently set
	(3)	**Limit value ranges for EM-20-E STW (STB)**
000		For permanently set limit value (EM-30-E and EM-80)
055		+40 to +110 °C
506		+100 to +150 °C
508		+110 to +170 °C
575		+180 to +250 °C
606		+230 to +300 °C
	(4)	**Permanently set limit values for EM-30-E and EM-80**
000		For adjustable limit value range
...		Specified in °C
	(5)	**Capillary length**
1000		1000 mm
2000		2000 mm
3000		3000 mm
4000		4000 mm
5000		5000 mm
....		(Special length, specified in mm, min. 500 mm, max. 5000 mm)
	(6)	**Capillary material**
40		Cu (Copper)
20		CrNi (Stainless steel)
	(7)	**Process connection**
10		Plain cylindrical probe
20		Screw-in rotection tube
	(8)	**Thread of process connection**
00		Without thread (process connection "10")
13		External thread G 1/2

JUMO GmbH & Co. KG
Delivery address: Mackenrodtstraße 14
36039 Fulda, Germany
Postal address: 36035 Fulda, Germany
Phone: +49 661 6003-0
Fax: +49 661 6003-607
E-mail: mail@jumo.net
Internet: www.jumo.net

JUMO Instrument Co. Ltd.
JUMO House
Temple Bank, Riverway
Harlow, Essex CM20 2DY, UK
Phone: +44 1279 635533
Fax: +44 1279 635262
E-mail: sales@jumo.co.uk
Internet: www.jumo.co.uk

JUMO Process Control, Inc.
6733 Myers Road
East Syracuse, NY 13057, USA
Phone: 315-437-5866
1-800-554-5866
Fax: 315-437-5860
E-mail: info.us@jumo.net
Internet: www.jumousa.com

	(9)	**Material of process connection**
00		Only with process connection "10"
46		CuZn (Brass)
20		CrNi (Stainless steel 1.4571)

	(10)	**Fitting length "S" (immersion tube length)**
000		Without protection tube
100		100 mm
120		120 mm
150		150 mm
200		200 mm
300		300 mm
...		(Special length, specification in mm)

	(11)	**Diameter "D" (immersion tube diameter)**
00		Without protection tube
8		8 mm

	(12)	**Diameter "d" (probe diameter)**
00		Without protection tube
6		6 mm

	(13)	**Extra codes**
000		Without extra codes
574		Microswitch with N/C contact, restart lock, and additional signal contact (only STB)
702		Snap-action switch with gold plating (cannot be combined with extra code "574")
699		Screw-connection with 2.5 mm^2 conductor cross section
704		Switching head mounting with 2 M4 screws, spaced 28 mm
705		Switching head mounting with 2 M3 screws, spaced 33 mm
706		Switching head mounting with 2 M3 screws, spaced 22 mm
710		Central mounting with acorn nut (only for STB)
707		Temperature compensation

[a] Other control ranges / limit value ranges upon request

	(1)		(2)		(3)		(4)		(5)		(6)		(7)		(8)		(9)		(10)		(11)		(12)		(13)		
Order code	**602026**	/	[ ]	-	[ ]	-	[ ]	-	[ ]	-	[ ]	-	[ ]	-	[ ]	-	[ ]	-	[ ]	-	[ ]	-	[ ]	/	[ ]	,	...
Order example	602026	/	80	-	000	-	120	-	2000	-	40	-	10	-	00	-	00	-	000	-	00	-	00	/	000 [a]	,	...

[a] State extra codes one after another, separated by commas

JUMO GmbH & Co. KG
Delivery address: Mackenrodtstraße 14
36039 Fulda, Germany
Postal address: 36035 Fulda, Germany
Phone: +49 661 6003-0
Fax: +49 661 6003-607
Email: mail@jumo.net
Internet: www.jumo.net

JUMO Instrument Co. Ltd.
JUMO House
Temple Bank, Riverway
Harlow, Essex, CM20 2DY, UK
Phone: +44 1279 63 55 33
Fax: +44 1279 62 50 29
Email: sales@jumo.co.uk
Internet: www.jumo.co.uk

JUMO Process Control, Inc.
6724 Joy Road
East Syracuse, NY 13057, USA
Phone: +1 315 437 5866
Fax: +1 315 437 5860
Email: info.us@jumo.net
Internet: www.jumousa.com

JUMO heatTHERM

Panel-mounted thermostat

Special features

- Stable switching point position due to ambient temperature compensation (standard)
- Max. switching capacity 16 A, 400 V
- Operating life at least 250,000 switching cycles for TR and TW
- Control ranges of upt to 500 °C are possible
- STB with extensive setting range: 250 K at 250° (angular degree)
- Switching point deviation during the entire operating life of up to ±5 %

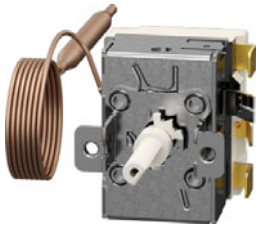

Type 602030/01

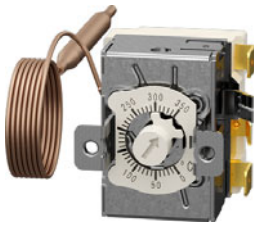

Type 602030/02

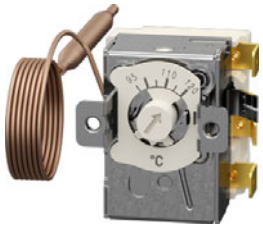

Type 602031/20, Type 602031/21

Type 602031/80, Type 602031/81

Brief description

Thermostats control and monitor thermal processes.

This thermostat is available as temperature controller TR, temperature monitor TW (type 602030), safety temperature monitor STW (STB), or safety temperature limiter STB (type 602031).

The panel-mounted thermostat operates according to the fluid expansion principle. The electrical switching element is a snap-action switch.

The panel-mounted thermostat is RoHS-compliant and cadmium-free.

Switching functions

Temperature controller TR and Temperature monitor TW
If the temperature on the temperature probe exceeds the setpoint value, the electrical circuit is opened or closed by a microswitch. If the temperature falls below the selected setpoint value (by the switching differential), the microswitch is reset to its initial position.

Restart lock at safety temperature limiter STB
If the temperature at the temperature sensor exceeds the set limit value, the electrical circuit is opened and the microswitch is mechanically locked. After falling below the limit value by approx. 10 % of the temperature range (approx. 15 % of the limit value setting > +350 °C), the switch can be unlocked manually.

Use of the safety temperature monitor STW as a safety temperature limiter STB
The circuitry used with the thermostat must comply with DIN EN 14597 and VDE 0631.

Self-monitoring for safety temperature limiter STB and safety temperature monitor STW (STB)
If the measuring system is destroyed (i.e. if the expansion fluid escapes) the pressure in the membrane of the STB and STW (STB) drops and permanently opens the electrical circuit. Unlocking is then no longer possible.

When the STW (STB) and STB sensors cools down to the negative temperature range, the circuit 1 to 2 opens, but must be unlocked manually by the restart knob when the temperature rises. The STW (STB) restarts automatically.

Approvals and approval marks (see technical data)

JUMO GmbH & Co. KG
Delivery address: Mackenrodtstraße 14
36039 Fulda, Germany
Postal address: 36035 Fulda, Germany
Phone: +49 661 6003-0
Fax: +49 661 6003-607
Email: mail@jumo.net
Internet: www.jumo.net

JUMO Instrument Co. Ltd.
JUMO House
Temple Bank, Riverway
Harlow, Essex, CM20 2DY, UK
Phone: +44 1279 63 55 33
Fax: +44 1279 62 50 29
Email: sales@jumo.co.uk
Internet: www.jumo.co.uk

JUMO Process Control, Inc.
6724 Joy Road
East Syracuse, NY 13057, USA
Phone: +1 315 437 5866
Fax: +1 315 437 5860
Email: info.us@jumo.net
Internet: www.jumousa.com

Technical data

Electrical data

Switching element	Snap-action switch with single-pole changeover contact		
Max. switching capacity	TW/TR	STW (STB)	STB
On the N/C contact (contact deck 1 to 2)	AC 400 V +10 %, 16 A, AC 230 V +10 %, 16 (2.5)[a] A, cos φ = 1 (0.6)[a], DC 230 V +10 %, 0.25 A		
On the N/O contact (contact deck 1 to 4)	AC 400 V +10 %, 6.3 A, AC 230 V +10 %, 6.3 (2,5)[a] A, cos φ = 1 (0.6)[a], DC 230 V +10 %, 0.25 A		-
On the signal contact (contact deck 1 to 4)	-	-	AC 400 V +10 %, 2 A, AC 230 V +10 %, 2 (0.4)[a] A, cos φ = 1 (0.6)[a], DC 230 V +10 %, 0.25 A
Electrical connection	A 6.3 to 0.8, according to DIN 46244		
Switching realiability	To ensure the greatest possible switching reliability, we recommend a minimum load of:		
For silver contacts	AC/DC = 24 V, 100 mA		
For gold-plated contacts (extra code 702)	AC/DC = 10 V, 5 mA		

[a] Inductive load

Environmental influences

Switching differential in % of the control/limit value range	Rated value		
TR, TW	2.5		(Standard)
	7		(auf Anfrage)
STW (STB)	7		(Standard)
Switching point accuracy in % of the control/limit value range			
TR, TW	In the upper third of the scale ±3 %, at the beginning of scale ±6 %		
STW (STB), STB	In the upper third of the scale ±4 %, at the beginning of scale ±8 %		
	Control range	In the „first half“	In the „second half“
	70 to 130 °C	+0/-12 K	+0/-5 K
	95 to 120 °C	+0/-5 K	+0/-5 K
	20 to 150 °C	+0/-15 K	+0/-10 K
	50 to 300 °C	+0/-30 K	+0/-15 K
Ambient temperature influence	Referring to the control/limit value range If the ambient temperature at the switching head and/or the capillary deviates from the calibration ambient temperature 22 °C, a switching point shift occurs.		
Admissible storage temperature	-50 to +50 °C or up to max. admissible ambiente temperature, see nameplate		
Admissible ambiente temperature when in use	See nameplate		
Rated position (NL)	Any		

Housing

Material	
Housing	Sheet steel, galvanized
Capillary	Cu-DHP
Swtiching socket	Polyester resin molding compound, white
Protection type	IP00, according to DIN EN 60529
Weight	Approx. 120 g
Capillary	2000 mm (standard) inclusive 460 mm protective tubing
Min. bending radius	5 mm

JUMO GmbH & Co. KG
Delivery address: Mackenrodtstraße 14
36039 Fulda, Germany
Postal address: 36035 Fulda, Germany
Phone: +49 661 6003-0
Fax: +49 661 6003-607
Email: mail@jumo.net
Internet: www.jumo.net

JUMO Instrument Co. Ltd.
JUMO House
Temple Bank, Riverway
Harlow, Essex, CM20 2DY, UK
Phone: +44 1279 63 55 33
Fax: +44 1279 62 50 29
Email: sales@jumo.co.uk
Internet: www.jumo.co.uk

JUMO Process Control, Inc.
6724 Joy Road
East Syracuse, NY 13057, USA
Phone: +1 315 437 5866
Fax: +1 315 437 5860
Email: info.us@jumo.net
Internet: www.jumousa.com

Approvals and approval marks

DIN	
Testing agency	DIN CERTCO/TÜV Süd
Certificates/certification numbers	STB1169
Inspection basis	DIN EN 14597
Valid for	Type 602031, switching function STB
DIN	
Testing agency	DIN CERTCO/TÜV Süd
Certificates/certification numbers	STW(STB)1190
Inspection basis	DIN EN 14597
Valid for	Type 602031, switching function STW (STB)
DIN	
Testing agency	DIN CERTCO/TÜV Süd
Certificates/certification numbers	TR1168
Inspection basis	DIN EN 14597
Valid for	Type 602030, switching function TR
DIN	
Testing agency	DIN CERTCO/TÜV Süd
Certificates/certification numbers	TW1189
Inspection basis	DIN EN 14597
Valid for	Type 602030, switching function TW
DIN	
Testing agency	DIN CERTCO
Certificates/certification numbers	B_{10d} = 250.000[a]
Inspection basis	DIN EN ISO 13849-1
Valid for	Type 602030, Type 602031
UL	
Testing agency	UL Germany
Certificates/certification numbers	E66358 Vol. 1
Inspection basis	UL 873
Valid for	Type 602030, Type 602031, with switching capacity 230 V, 16 A
UL	
Testing agency	UL Germany
Certificates/certification numbers	MH45736 Vol. 1
Inspection basis	UL 353
Valid for	Type 602031 (STB), with switching capacity 230 V, 16 A
PED	
Testing agency	TÜV Süd
Certificates/certification numbers	Z-IS-TAF-MUC-18-05-2652099-02162623
Inspection basis	2014/68/EU
Valid for	Type 602031
EAC[b]	
Testing agency	GOST Norm AG
Certificates/certification numbers	TC TU C-DE.AB98.B.00348
Inspection basis	Technical rules of the customs union Russia/Belarus/Kazakhstan
Valid for	Type 602030, Type 602031

[a] For further details see safety manual B 602031.9. Switching capacity check implemented at 230 V, 16 A, ohmic load.

[b] Russian documentation upon request

JUMO GmbH & Co. KG
Delivery address: Mackenrodtstraße 14
36039 Fulda, Germany
Postal address: 36035 Fulda, Germany
Phone: +49 661 6003-0
Fax: +49 661 6003-607
Email: mail@jumo.net
Internet: www.jumo.net

JUMO Instrument Co. Ltd.
JUMO House
Temple Bank, Riverway
Harlow, Essex, CM20 2DY, UK
Phone: +44 1279 63 55 33
Fax: +44 1279 62 50 29
Email: sales@jumo.co.uk
Internet: www.jumo.co.uk

JUMO Process Control, Inc.
6724 Joy Road
East Syracuse, NY 13057, USA
Phone: +1 315 437 5866
Fax: +1 315 437 5860
Email: info.us@jumo.net
Internet: www.jumousa.com

Dimensions

Type 602030/01

- Temperature controller
- Compensated ambient temperature (standard)
- Max. switching capacity 16 A, 400 V
- Operating life at least 250,000 switching cycles
- Switching point deviation (drift) during the entire operating life of up to ±5 %

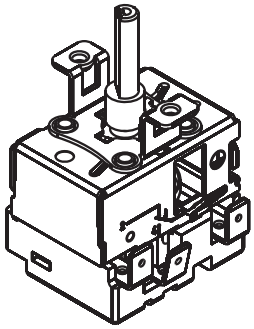

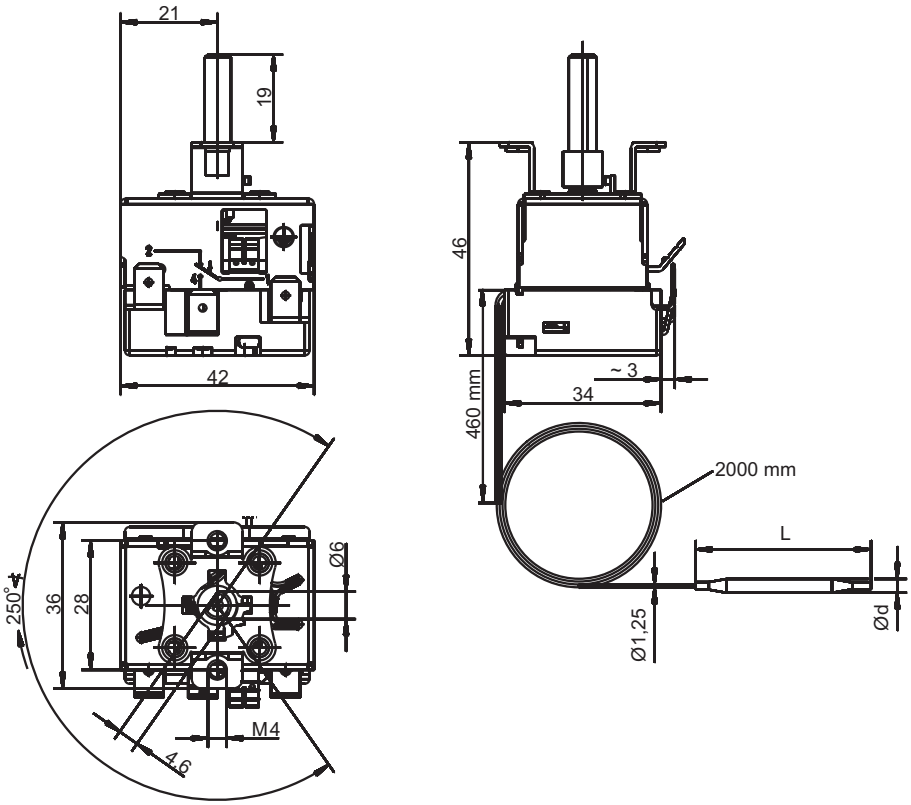

Type 602030/02

- Temperature monitor
- Compensated ambient temperature (standard)
- Max. switching capacity 16 A, 400 V
- Operating life at least 250,000 switching cycles
- Switching point deviation (drift) during the entire operating life of up to ±5 %

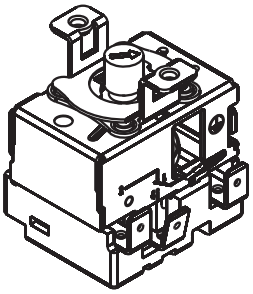

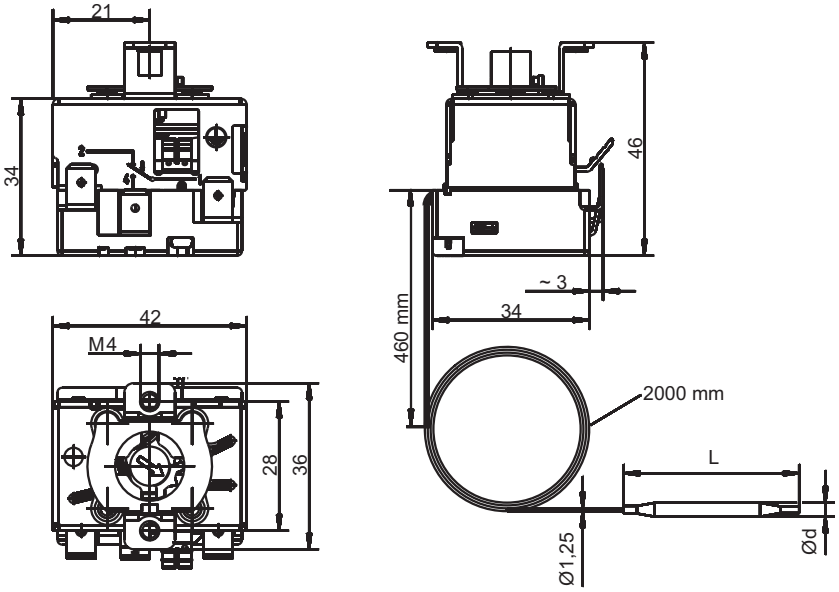

JUMO GmbH & Co. KG
Delivery address: Mackenrodtstraße 14
36039 Fulda, Germany
Postal address: 36035 Fulda, Germany
Phone: +49 661 6003-0
Fax: +49 661 6003-607
Email: mail@jumo.net
Internet: www.jumo.net

JUMO Instrument Co. Ltd.
JUMO House
Temple Bank, Riverway
Harlow, Essex, CM20 2DY, UK
Phone: +44 1279 63 55 33
Fax: +44 1279 62 50 29
Email: sales@jumo.co.uk
Internet: www.jumo.co.uk

JUMO Process Control, Inc.
6724 Joy Road
East Syracuse, NY 13057, USA
Phone: +1 315 437 5866
Fax: +1 315 437 5860
Email: info.us@jumo.net
Internet: www.jumousa.com

Type 602031/21

- Safety temperature monitor
- Compensated ambient temperature (standard)
- Max. switching capacity 16 A, 400 V

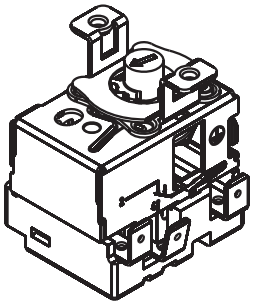

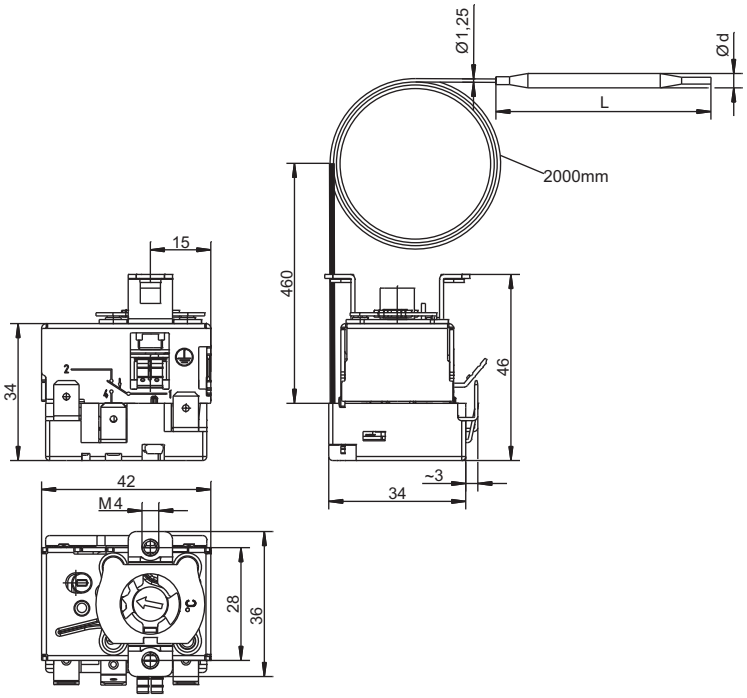

Type 602031/80

- Safety temperature limiter
- Compensated ambient temperature (standard)
- Max. switching capacity 16 A, 400 V

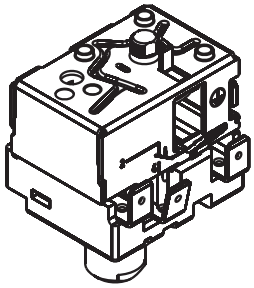

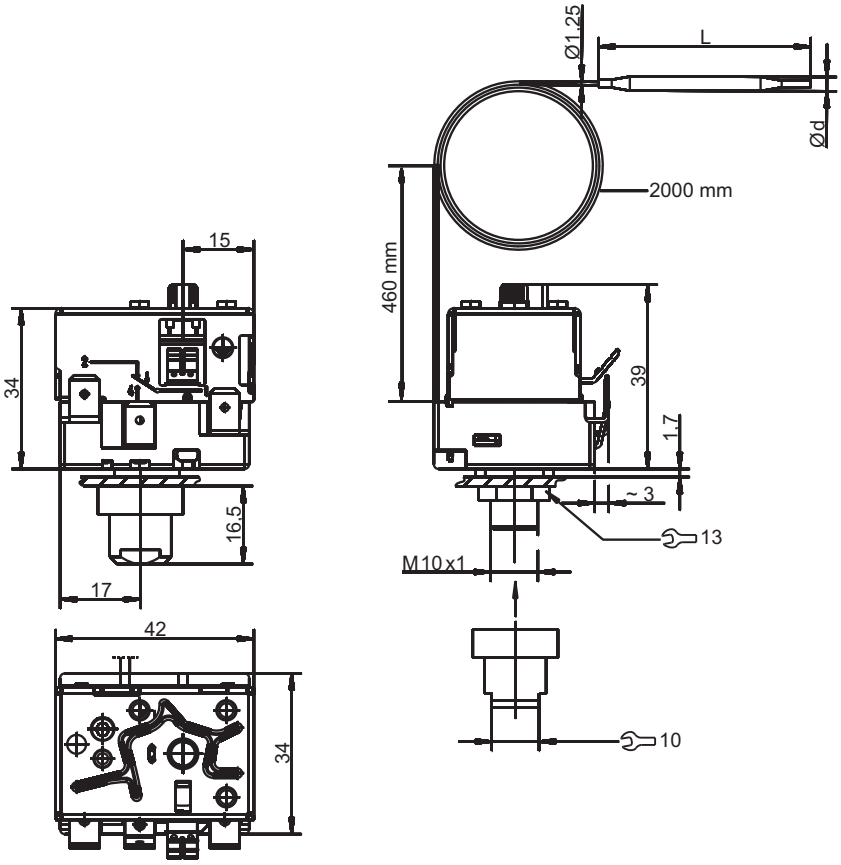

JUMO GmbH & Co. KG
Delivery address: Mackenrodtstraße 14
36039 Fulda, Germany
Postal address: 36035 Fulda, Germany
Phone: +49 661 6003-0
Fax: +49 661 6003-607
Email: mail@jumo.net
Internet: www.jumo.net

JUMO Instrument Co. Ltd.
JUMO House
Temple Bank, Riverway
Harlow, Essex, CM20 2DY, UK
Phone: +44 1279 63 55 33
Fax: +44 1279 62 50 29
Email: sales@jumo.co.uk
Internet: www.jumo.co.uk

JUMO Process Control, Inc.
6724 Joy Road
East Syracuse, NY 13057, USA
Phone: +1 315 437 5866
Fax: +1 315 437 5860
Email: info.us@jumo.net
Internet: www.jumousa.com

Type 602031/81

- Safety temperature limiter
- Compensated ambient temperature (standard)
- Max. switching capacity 16 A, 400 V

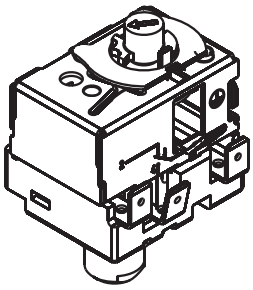

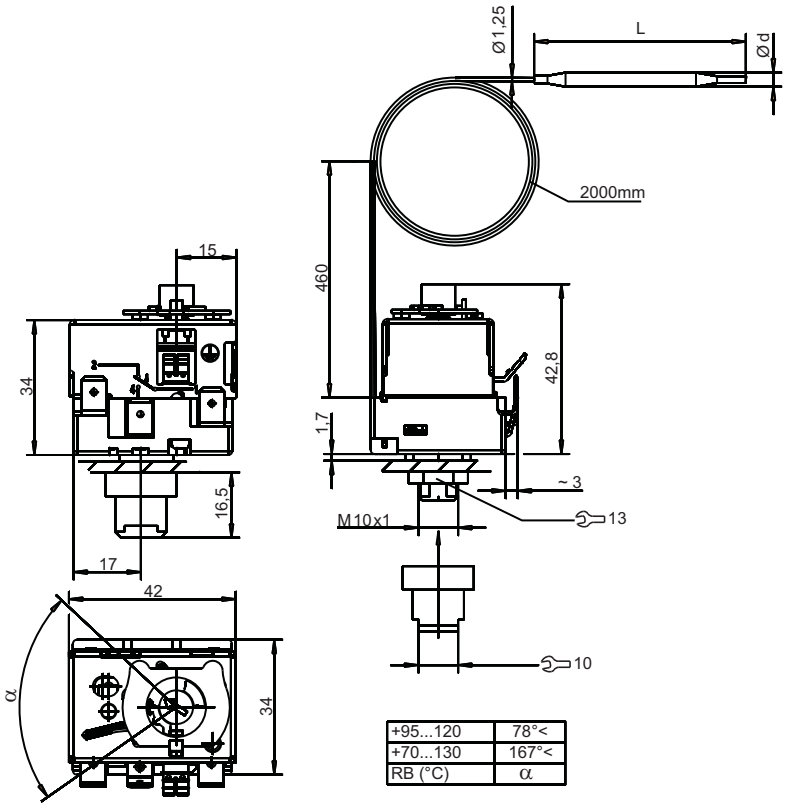

+95...120	78°<
+70...130	167°<
RB (°C)	α

Type 602031/81

- Safety temperature limiter
- Compensated ambient temperature (standard)
- Max. switching capacity 16 A, 400 V
- With extra code 749: 250° (angular degree)

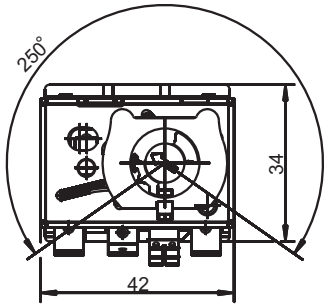

JUMO GmbH & Co. KG
Delivery address: Mackenrodtstraße 14
36039 Fulda, Germany
Postal address: 36035 Fulda, Germany
Phone: +49 661 6003-0
Fax: +49 661 6003-607
Email: mail@jumo.net
Internet: www.jumo.net

JUMO Instrument Co. Ltd.
JUMO House
Temple Bank, Riverway
Harlow, Essex, CM20 2DY, UK
Phone: +44 1279 63 55 33
Fax: +44 1279 62 50 29
Email: sales@jumo.co.uk
Internet: www.jumo.co.uk

JUMO Process Control, Inc.
6724 Joy Road
East Syracuse, NY 13057, USA
Phone: +1 315 437 5866
Fax: +1 315 437 5860
Email: info.us@jumo.net
Internet: www.jumousa.com

Connection diagram

The connection diagram in the data sheet provides information on product selection.

For the electrical connection, only use the installation instructions or the operating manual.

Wiring diagrams

Type 602030/01

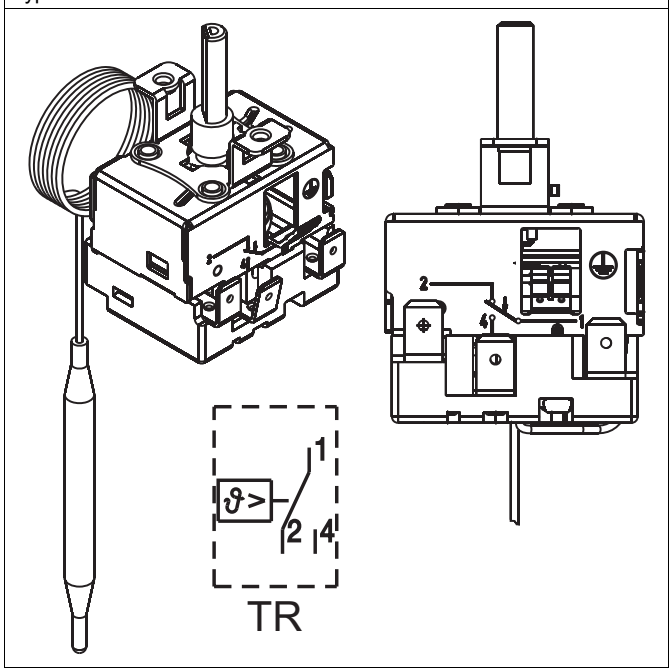

Type 602030/02

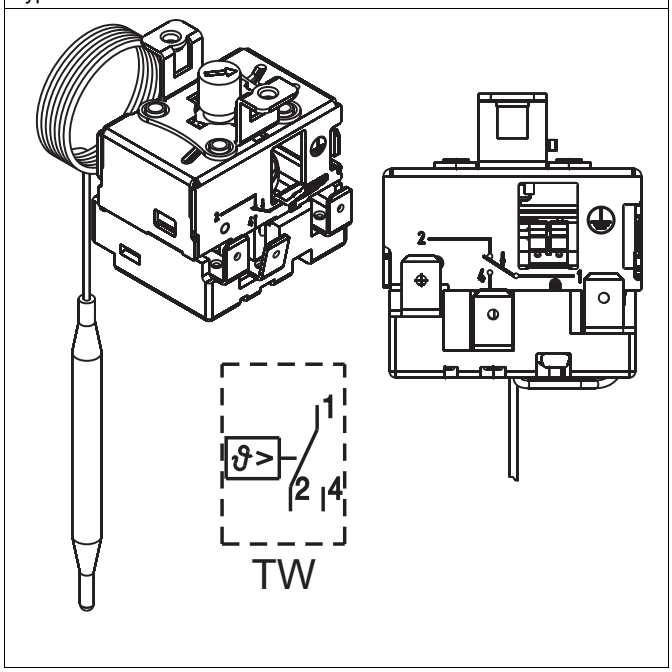

Type 602031/20 and Type 602031/21

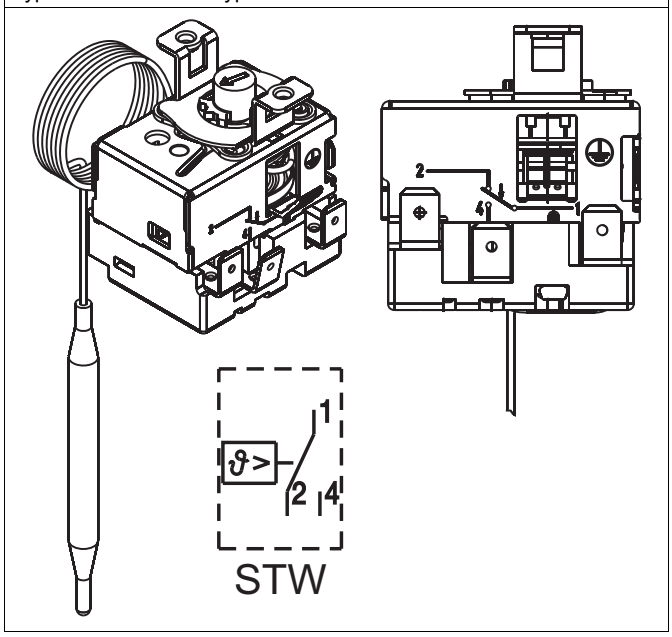

Type 602031/80 and Type 602031/81

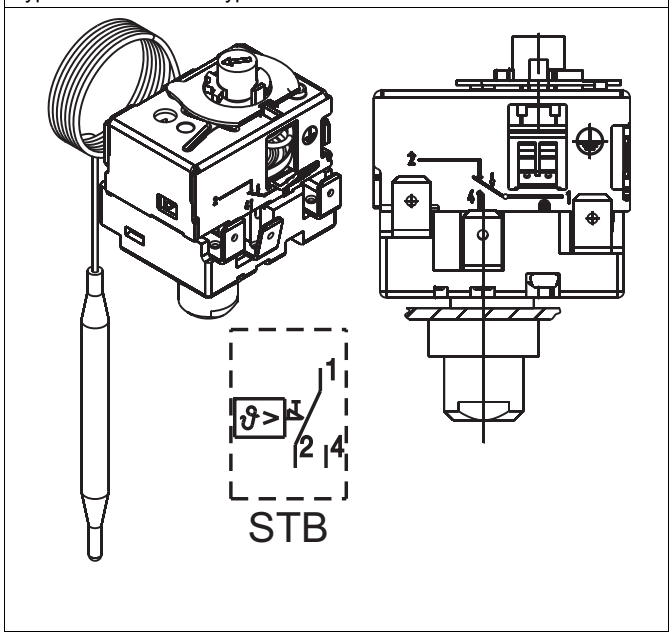

JUMO GmbH & Co. KG
Delivery address: Mackenrodtstraße 14
36039 Fulda, Germany
Postal address: 36035 Fulda, Germany
Phone: +49 661 6003-0
Fax: +49 661 6003-607
Email: mail@jumo.net
Internet: www.jumo.net

JUMO Instrument Co. Ltd.
JUMO House
Temple Bank, Riverway
Harlow, Essex, CM20 2DY, UK
Phone: +44 1279 63 55 33
Fax: +44 1279 62 50 29
Email: sales@jumo.co.uk
Internet: www.jumo.co.uk

JUMO Process Control, Inc.
6724 Joy Road
East Syracuse, NY 13057, USA
Phone: +1 315 437 5866
Fax: +1 315 437 5860
Email: info.us@jumo.net
Internet: www.jumousa.com

Order details

	(1)	**Basic type**
602030/01		JUMO heatTHERM – Panel-mounted thermostats, temperature controller (TR)
602030/02		JUMO heatTHERM – Panel-mounted thermostats, temperature monitor (TW)
602031/20		JUMO heatTHERM – Panel-mounted thermostats, safety temperature monitor (STW), permanently set
602031/21		JUMO heatTHERM – Panel-mounted thermostats, safety temperature monitor (STW)
602031/80		JUMO heatTHERM – Panel-mounted thermostats, safety temperature limiter (STB), permanently set
602031/81		JUMO heatTHERM – Panel-mounted thermostats, safety temperature limiter (STB)
	(2)	**Basic type extensions**
000		With permanently set limit value
026		0 to 120 °C
028		0 to 200 °C
041		20 to 90 °C
043		20 to 150 °C
064		50 to 300 °C
640		50 to 300 °C (S)
666		60 to 130 °C
671		60 to 130 °C
	(3)	**Limit value (STW/STB)**
000		With adjustable control range
095		95 °C
100		100 °C
110		110 °C
	(4)	**Switching differential**
00		None
25		2.5 %
70		7 %
	(5)	**Capillary length**
1000		1,000 mm
2000		2,000 mm
3000		3,000 mm
	(6)	**Capillary material**
40		Cu (copper), Ø 1.25 mm
	(7)	**Process connection**
10		Plain cylindrical probe
	(8)	**Probe diameter**
4		4 mm
6		6 mm
	(9)	**Probe material**
20		CrNi (stainless steel)
40		Cu (copper)
	(10)	**Capillary protection hose type**
00		None
13		PVC hose
	(11)	**Protection hose length**
0		None
460		460 mm

JUMO GmbH & Co. KG
Delivery address: Mackenrodtstraße 14
36039 Fulda, Germany
Postal address: 36035 Fulda, Germany
Phone: +49 661 6003-0
Fax: +49 661 6003-607
Email: mail@jumo.net
Internet: www.jumo.net

JUMO Instrument Co. Ltd.
JUMO House
Temple Bank, Riverway
Harlow, Essex, CM20 2DY, UK
Phone: +44 1279 63 55 33
Fax: +44 1279 62 50 29
Email: sales@jumo.co.uk
Internet: www.jumo.co.uk

JUMO Process Control, Inc.
6724 Joy Road
East Syracuse, NY 13057, USA
Phone: +1 315 437 5866
Fax: +1 315 437 5860
Email: info.us@jumo.net
Internet: www.jumousa.com

(12)	Extra code
000	None
702	Snap-action switch, gold-plated
707	Temperature compensation
742	Tab connector, straight
749	Setting range with 250 angular degrees (only STB/STW)

	(1)		(2)		(3)		(4)		(5)		(6)		(7)	
Order code		-		-		-		-		-		-		-
Order example	602031/80	-	000	-	110	-	25	-	2000	-	40	-	10	-

(8)		(9)		(10)		(11)		(12)	
	-		-		-		/		, ...[a]
6	-	40	-	13	-	460	/	000	

[a] List extra codes in sequence, separated by commas.

Stock versions

JUMO heatTHERM – Temperature controller (TR) with 2,000 mm capillary and probe diamter 6 mm

Order code	Control range	Limit value	Switching differ-ential	Part no.
602030/01-041-000-25-2000-40-10-6-40-13-460/707	20 to 90 °C	With adjustable control range	Approx. 2 K	60003218
602030/01-041-000-70-2000-40-10-6-40-13-460/707	20 to 90 °C		Approx. 5 K	60003280
602030/01-026-000-25-2000-40-10-6-40-13-460/707	0 to 120 °C		Approx. 3 K	60003219
602030/01-028-000-25-2000-40-10-6-40-13-460/707	0 to 200 °C		Approx. 5 K	60003220
602030/01-064-000-25-2000-40-10-6-40-13-460/707	50 to 300 °C		Approx. 6 K	60003221

JUMO heatTHERM – Temperature monitor (TW) with 2,000 mm capillary and probe diamter 6 mm

Order code	Control range	Limit value	Switching differ-ential	Part no.
602030/02-041-000-25-2000-40-10-6-40-13-460/707	20 to 90 °C	With adjustable control range	Approx. 2 K	60003222
602030/02-041-000-70-2000-40-10-6-40-13-460/707	20 to 90 °C		Approx. 5 K	60003281
602030/02-026-000-25-2000-40-10-6-40-13-460/707	0 to 120 °C		Approx. 3 K	60003223
602030/02-028-000-25-2000-40-10-6-40-13-460/707	0 to 200 °C		Approx. 5 K	60003224
602030/02-064-000-25-2000-40-10-6-40-13-460/707	50 to 300 °C		Approx. 6 K	60003225

JUMO heatTHERM – Safety temperature monitor (STW) with 2,000 mm capillary and probe diamter 6 mm

Order code	Control range	Limit value	Switching differ-ential	Part no.
602031/21-671-000-70-2000-40-10-6-40-13-460/707	70 bis 130 °C	With adjustable control range	Approx. 10 K	60003226

JUMO heatTHERM – Safety temperature limiter (STB), permanently set, with 2,000 mm capillary and probe diamter 6 mm

Order code	Control range	Limit value	Switching differ-ential	Part no.
602031/80-000-100-00-2000-40-10-6-40-13-460/707	Limit value per-manently set	100 °C	Approx. 10 K	60002994

JUMO GmbH & Co. KG
Delivery address: Mackenrodtstraße 14
36039 Fulda, Germany
Postal address: 36035 Fulda, Germany
Phone: +49 661 6003-0
Fax: +49 661 6003-607
Email: mail@jumo.net
Internet: www.jumo.net

JUMO Instrument Co. Ltd.
JUMO House
Temple Bank, Riverway
Harlow, Essex, CM20 2DY, UK
Phone: +44 1279 63 55 33
Fax: +44 1279 62 50 29
Email: sales@jumo.co.uk
Internet: www.jumo.co.uk

JUMO Process Control, Inc.
6724 Joy Road
East Syracuse, NY 13057, USA
Phone: +1 315 437 5866
Fax: +1 315 437 5860
Email: info.us@jumo.net
Internet: www.jumousa.com

JUMO heatTHERM – Safety temperature limiter (STB) with 2,000 mm capillary and probe diamter 6 mm

Order code	Control range	Limit value	Switching differ-ential	Part no.
602031/81-666-000-00-2000-40-10-6-40-13-460/707	95 to 120 °C	With adjustable control range	Approx. 10 K	60002995
602031/81-671-000-00-2000-40-10-6-40-13-460/707	70 to 130 °C			60003136
602031/81-043-000-00-2000-40-10-6-40-13-460/707, 749	20 to 150 °C		In the upper third approx. 15 K	60003291
			At the scale beginning approx. 30 K	
602031/81-640-000-00-2000-40-10-6-20-13-460/707, 749	50 to 300 °C (S)		In the upper third approx. 25 K	60003292
			At the scale beginning approx. 45 K	

Accessories

according to product groups 606710 and 606715

Thermowell set
(according to product group 606710), suitable for type 602030 and type 602031

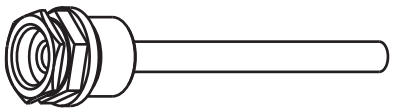		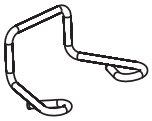	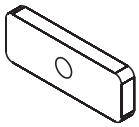		
Thermowell with sealing collar		Clamp for strain relief	Plate for surface-mounted thermostat	Screw for surface-mounted thermostat	
Type	Abbrevia-tion	Connection	Insertion length EL in mm	Material	**Part no.**
Screw-in thermowell with seal-ing collar	28	G 1/2	100	Brass, nickel-plated	60003177
			150		60003203
			200		60003171
			100	Stainless steel, 1.4571	60003172
			150		60003205
			200		60003173

Mounting set for mounting rail DIN EN 60715 TH 35-7.5
(according to product group 606710)

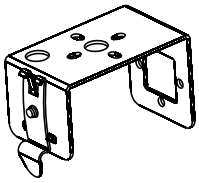			
Type	2 screws		**Part no.**
Adapter set, mounting rail JUMO heatTHERM/EM	M3 × 4	M4 × 5	00511794

JUMO GmbH & Co. KG
Delivery address: Mackenrodtstraße 14
36039 Fulda, Germany
Postal address: 36035 Fulda, Germany
Phone: +49 661 6003-0
Fax: +49 661 6003-607
Email: mail@jumo.net
Internet: www.jumo.net

JUMO Instrument Co. Ltd.
JUMO House
Temple Bank, Riverway
Harlow, Essex, CM20 2DY, UK
Phone: +44 1279 63 55 33
Fax: +44 1279 62 50 29
Email: sales@jumo.co.uk
Internet: www.jumo.co.uk

JUMO Process Control, Inc.
6724 Joy Road
East Syracuse, NY 13057, USA
Phone: +1 315 437 5866
Fax: +1 315 437 5860
Email: info.us@jumo.net
Internet: www.jumousa.com

Setpoint adjuster
(according to product group 606715), suitable for type 602031/01

Type	Control range in °C	Rotary knob 07	Panel 23	Adjustable stop 16	2 Screws	**Part no.**
W8	20 to 90				M4 × 8	60003091
	0 to 120					60003227
	0 to 200					60003095
	50 to 300					60003098

JUMO GmbH & Co. KG
Delivery address: Mackenrodtstraße 14
36039 Fulda, Germany
Postal address: 36035 Fulda, Germany
Phone: +49 661 6003-0
Fax: +49 661 6003-607
Email: mail@jumo.net
Internet: www.jumo.net

JUMO Instrument Co. Ltd.
JUMO House
Temple Bank, Riverway
Harlow, Essex CM 20 2DY, UK
Phone: +44 1279 63 55 33
Fax: +44 1279 62 50 29
Email: sales@jumo.co.uk
Internet: www.jumo.co.uk

JUMO Process Control, Inc.
6733 Myers Road
East Syracuse, NY 13057, USA
Phone: +1 315 437 5866
Fax: +1 315 437 5860
Email: info.us@jumo.net
Internet: www.jumousa.com

JUMO heatTHERM P100

Panel-mounted thermostat

Special features

- Temperature controller (TR)
- Entry-level class
- Simple mounting

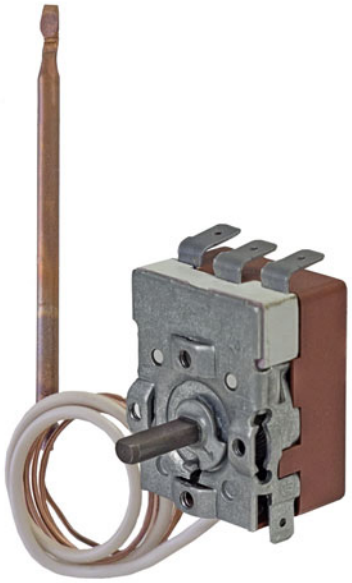

Brief description

Thermostats control and monitor thermal processes.

The JUMO heatTHERM P100 is available as a temperature controller (TR). The panel-mounted thermostat operates according to the liquid expansion principle. The electrical switching element is a snap-action switch.

The panel-mounted thermostat is RoHS-compliant and cadmium-free.

JUMO GmbH & Co. KG
Delivery address: Mackenrodtstraße 14
36039 Fulda, Germany
Postal address: 36035 Fulda, Germany
Phone: +49 661 6003-0
Fax: +49 661 6003-607
Email: mail@jumo.net
Internet: www.jumo.net

JUMO Instrument Co. Ltd.
JUMO House
Temple Bank, Riverway
Harlow, Essex CM 20 2DY, UK
Phone: +44 1279 63 55 33
Fax: +44 1279 62 50 29
Email: sales@jumo.co.uk
Internet: www.jumo.co.uk

JUMO Process Control, Inc.
6733 Myers Road
East Syracuse, NY 13057, USA
Phone: +1 315 437 5866
Fax: +1 315 437 5860
Email: info.us@jumo.net
Internet: www.jumousa.com

Technical data

Switching functions

Temperature controller (TR)	If the temperature on the temperature probe exceeds the setpoint value, the microswitch is activated by the transmission mechanics and the electrical circuit is opened or closed. If the temperature falls below the selected setpoint value (by the amount of the switching differential), the microswitch is reset to its initial position.

General information

Capillary	Minimum bending radius of the capillary 5 mm, capillary Ø 1.4 mm
Material	Copper (Cu)
Length	935 mm or 2000 mm
Protective hose	315 mm
Temperature probe	Ø 6 mm, length 96±5 mm
Material	Copper (Cu)
Process connection	See data sheet 606710 (plain cylindrical probe "10")
Max. probe temperature	15% or at least 25K of the limit value
Mean ambient temperature influence	When the ambient temperature on the switching head and/or the capillary deviates from the calibration ambient temperature of 22 °C, a switching point offset occurs. Higher ambient temperature = lower switching point Lower ambient temperature = higher switching point
Protection type	IP00, according to DIN EN 60529

Housing

Upper part of the housing	Steel sheet, zinc-plated
Fastening	2 M4 screws, spacing 28 mm
Rated position (NL)	Any
Weight	Approx. 80 g, depending on version
Protective conductor grounding	Fixing bracket — Standard
	Tab connector connection — Standard

JUMO GmbH & Co. KG
Delivery address: Mackenrodtstraße 14
36039 Fulda, Germany
Postal address: 36035 Fulda, Germany
Phone: +49 661 6003-0
Fax: +49 661 6003-607
Email: mail@jumo.net
Internet: www.jumo.net

JUMO Instrument Co. Ltd.
JUMO House
Temple Bank, Riverway
Harlow, Essex CM 20 2DY, UK
Phone: +44 1279 63 55 33
Fax: +44 1279 62 50 29
Email: sales@jumo.co.uk
Internet: www.jumo.co.uk

JUMO Process Control, Inc.
6733 Myers Road
East Syracuse, NY 13057, USA
Phone: +1 315 437 5866
Fax: +1 315 437 5860
Email: info.us@jumo.net
Internet: www.jumousa.com

Electrical connection

TR	Switching capacity AC 230 V Inductive load in (x.x)	Overvoltage category	Max. Umgebungstemperatur am Schaltkopf	Electrical connection
Normally closed contact (N/C)	16 A (2.5 A) cos φ = 1 (0.6)	II	80 °C	Tab connector 6.3 mm
Normally open contact (N/O)	4 A (1.0 A) cos φ = 1 (0.6)			
Normally closed contact with normally open contact	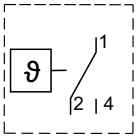			
Mode of operation	2BL			
Pollution degree	2			
Protection rating	I			

Environmental influences

Max. admissible ambient temperature	For transport -15 to +55 °C	For storage 5 to +55 °C	
Time constant $t_{0.632}$	< 45 s, measured in water	< 60 s, measured in oil	< 120 s, measured in air

JUMO GmbH & Co. KG
Delivery address: Mackenrodtstraße 14
36039 Fulda, Germany
Postal address: 36035 Fulda, Germany
Phone: +49 661 6003-0
Fax: +49 661 6003-607
Email: mail@jumo.net
Internet: www.jumo.net

JUMO Instrument Co. Ltd.
JUMO House
Temple Bank, Riverway
Harlow, Essex CM 20 2DY, UK
Phone: +44 1279 63 55 33
Fax: +44 1279 62 50 29
Email: sales@jumo.co.uk
Internet: www.jumo.co.uk

JUMO Process Control, Inc.
6733 Myers Road
East Syracuse, NY 13057, USA
Phone: +1 315 437 5866
Fax: +1 315 437 5860
Email: info.us@jumo.net
Internet: www.jumousa.com

Dimensions

Type 602051

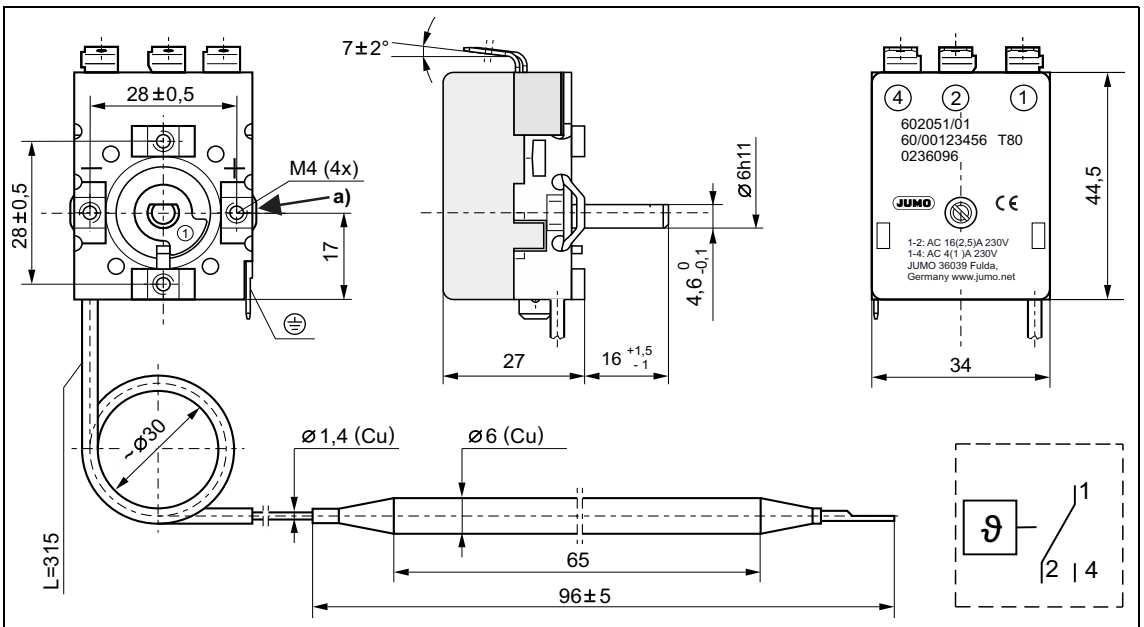

a) Reference for setpoint adjuster

Type 602051/01-050

Temperature range	30 to 90 °C
Switching differential	6+/-5 K
Switching point accuracy	At the end of the control range +/-9 K
Max. admissible probe temperature	90 +15% °C
Length of the capillary	935 mm 2000 mm

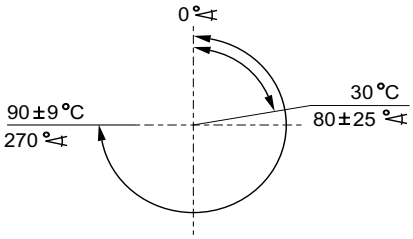

Type 602051/01-334

Temperature range	30 to 120 °C
Switching differential	5+/-4 K
Switching point accuracy	At the end of the control range +/-9 K
Max. admissible probe temperature	120 +15% °C
Length of the capillary	935 mm 2000 mm

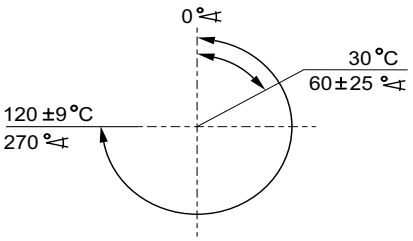

JUMO GmbH & Co. KG
Delivery address: Mackenrodtstraße 14
36039 Fulda, Germany
Postal address: 36035 Fulda, Germany
Phone: +49 661 6003-0
Fax: +49 661 6003-607
Email: mail@jumo.net
Internet: www.jumo.net

JUMO Instrument Co. Ltd.
JUMO House
Temple Bank, Riverway
Harlow, Essex CM 20 2DY, UK
Phone: +44 1279 63 55 33
Fax: +44 1279 62 50 29
Email: sales@jumo.co.uk
Internet: www.jumo.co.uk

JUMO Process Control, Inc.
6733 Myers Road
East Syracuse, NY 13057, USA
Phone: +1 315 437 5866
Fax: +1 315 437 5860
Email: info.us@jumo.net
Internet: www.jumousa.com

Order details

Order code	(1)	Basic type
602051		Panel-mounted thermostat

	(2)	Basic type extension
01		Temperature controller (TR)

	(3)	Control range °C
050		30 to 90
334		30 to 120

	(4)	Switching differential	
51		5+/-4 K	(at 30 to 120 °C)
61		6+/-5 K	(at 30 to 90 °C)

	(5)	Capillary length in mm
935		935
2000		2000

	(6)	Capillary material
40		Copper (Cu)

	(7)	Process connection (PC)	
10		Plain cylindrical probe	

	(8)	Temperature probe Ø in mm
6		6.0

	(9)	Temperature probe material
40		Copper (Cu)

	(10)	Capillary insulation length in mm
315		315

	(11)	Extra codes
000		None

	(1)		(2)	(3)	(4)	(5)	(6)	(7)	(8)	(9)	(10)		(11) [a]
Order code	[ ]	/	[ ] -	[ ] -	[ ] -	[ ] -	[ ] -	[ ] -	[ ] -	[ ] -	[ ]	/	[ ]
Order example	602051	/	01	050	61	935	40	10	6	40	315	/	000

[a] List extra codes in sequence and separate using commas.

JUMO GmbH & Co. KG
Delivery address: Mackenrodtstraße 14
36039 Fulda, Germany
Postal address: 36035 Fulda, Germany
Phone: +49 661 6003-0
Fax: +49 661 6003-607
Email: mail@jumo.net
Internet: www.jumo.net

JUMO Instrument Co. Ltd.
JUMO House
Temple Bank, Riverway
Harlow, Essex CM 20 2DY, UK
Phone: +44 1279 63 55 33
Fax: +44 1279 62 50 29
Email: sales@jumo.co.uk
Internet: www.jumo.co.uk

JUMO Process Control, Inc.
6733 Myers Road
East Syracuse, NY 13057, USA
Phone: +1 315 437 5866
Fax: +1 315 437 5860
Email: info.us@jumo.net
Internet: www.jumousa.com

Stock version

Order code	Control range	Capillary	Switching differential	Switching point accuracy	**Part no.**
602051/01-050-61-935-40-10-6-40-315/000	30 to 90 °C	935 mm	(6 ±5 K)	At the end of the control range ± 9 K	00696592
602051/01-050-61-2000-40-10-6-40-315/000		2 000 mm			00704768
602051/01-334-51-935-40-10-6-40-315/000	30 to 120 °C	935 mm	(5 ±4 K)		00696594
602051/01-334-51-2000-40-10-6-40-315/000		2 000 mm			00704767

Stock versions from 150 pieces.
Special versions from 3 000 pieces.

Accessories

Setpoint adjuster	Control range	**Part no.**	
For type 602051/01	30 to 90 °C	00705334	
	30 to 120 °C	00705337	

JUMO GmbH & Co. KG
Delivery address: Mackenrodtstraße 14
36039 Fulda, Germany
Postal address: 36035 Fulda, Germany
Phone: +49 661 6003-0
Fax: +49 661 6003-607
Email: mail@jumo.net
Internet: www.jumo.net

JUMO Instrument Co. Ltd.
JUMO House
Temple Bank, Riverway
Harlow, Essex, CM20 2DY, UK
Phone: +44 1279 63 55 33
Fax: +44 1279 62 50 29
Email: sales@jumo.co.uk
Internet: www.jumo.co.uk

JUMO Process Control, Inc.
6733 Myers Road
East Syracuse, NY 13057, USA
Phone: +1 315 437 5866
Fax: +1 315 437 5860
Email: info.us@jumo.net
Internet: www.jumousa.com

JUMO heatTHERM P300

3-Phase Panel-Mounted Thermostat

Special features

- Safety temperature limiter (STB) and temperature limiter (TB)
- Max. switching capacity 30 A, AC 480 V
- Different electrical connections are available
- Trip-free function
- Capillary break protection

Type 602090, standard

Brief description

Three-phase thermostats operate according to the principle of thermal expansion.
Thermostats control and monitor thermal processes.

The JUMO heatTHERM P300 is available as a safety temperature limiter (STB) and temperature limiter (TB).
In the event of a malfunction, the STB will set the system being monitored to a safe operating status.

Switching functions

Safety temperature limiter (STB)
If the temperature at the temperature probe exceeds the configured setpoint value, hen the switching mechanics are actuated, the electrical circuit is opened, and the mechanism is mechanically locked.
The unlocking difference denotes the difference between the limit value temperature and the earliest possible unlocking temperature.
The electrical circuit NC opens if the probe cools down into the negative temperature range. The mechanism must be manually unlocked once the temperature rises again.
If the measuring system is destroyed, i. e., if the expansion medium emerges, the pressure in the membrane drops and permanently opens the electrical circuit. It is no longer possible to unlock the mechanism.
With the trip-free function, the temperature switch-off at the limit value – through constant pressing of the reset button – is **not** disabled. With the heatTHERM P300 the contacts are opened (raised) through constant pressing of the reset button.

Temperature limiter (TB)
If the temperature at the temperature probe exceeds the configured setpoint value, hen the switching mechanics are actuated, the electrical circuit is opened, and the mechanism is mechanically locked.

The NC circuit does not open:

- when the sensor cools down into the negative temperature range
- in case of a capillary break

Type 602090, central mounting M10 × 1 with acorn nut

Approvals and approval marks (see "Technical data")

JUMO GmbH & Co. KG
Delivery address: Mackenrodtstraße 14
36039 Fulda, Germany
Postal address: 36035 Fulda, Germany
Phone: +49 661 6003-0
Fax: +49 661 6003-607
Email: mail@jumo.net
Internet: www.jumo.net

JUMO Instrument Co. Ltd.
JUMO House
Temple Bank, Riverway
Harlow, Essex, CM20 2DY, UK
Phone: +44 1279 63 55 33
Fax: +44 1279 62 50 29
Email: sales@jumo.co.uk
Internet: www.jumo.co.uk

JUMO Process Control, Inc.
6733 Myers Road
East Syracuse, NY 13057, USA
Phone: +1 315 437 5866
Fax: +1 315 437 5860
Email: info.us@jumo.net
Internet: www.jumousa.com

Technical data

General Information

Limit value setting	Permanently set (upward adjustment)			
Capillary	Capillary diameter 1.25 mm Min. bending radius of capillary 5 mm			
Material	Stainless steel (CrNi) Copper (Cu)			
Length	Variable (200 to 5000 mm)			
Temperature probe	Temperature probe diameter: 4 and 6 mm (other temperature probe diameters available upon request)			
Material	Stainless steel (CrNi) Copper (Cu) (The temperature probe diameter and probe length depend on the control range)			
Process connection	See data sheet 606710 (standard: plain cylindrical probe "10")			
Switching point accuracy Type 602090/080	Part no.	Limit value in °C with indication of tolerance	Capillary mm	Probe diameter (d) × L mm
	60003431	95 (-12)	700	(6) × 85
	60003432	110 (-15)		
	60003433	360 (-30)		(4) × 85
	The switching point accuracy is based on the probe volume and limit value! Once the limit value has been undershot by the dangerous temperature, the STB can be unlocked.			
Max. probe temperature	15 % or at least 25 K of the limit value			
Average ambient temperature influence	When the ambient temperature on the switching head and/or the capillary deviates from the calibration ambient temperature of 22 °C, a switching point offset occurs. Higher ambient temperature = lower switching point Lower ambient temperature = higher switching point			
Protection type	IP00 according to DIN EN 60529			
Material of insulating tube	PVC up to 95 °C, others upon request			

Upper part of the housing	Steel sheet, zinc-plated
Switching socket	Ceramic
Fastening	2 M4 screws, spacing 28 mm
Rated position (NL)	Any
Weight	Approx. 200 g, depending on version
Protection conductor grounding	Fixing bracket (standard), Tab connector connection (standard), Screw connection (optional extra code),

Capillary and temperature probe

Temperature	**Capillary**		**Temperature probe**
Up to 200 °C	Copper (Cu)	Diameter 1.25 mm	Copper (Cu)
Up to 350 °C			Stainless steel (CrNi)
Up to 365 °C (optional)	Stainless steel (CrNi)		

JUMO GmbH & Co. KG
Delivery address: Mackenrodtstraße 14
36039 Fulda, Germany
Postal address: 36035 Fulda, Germany
Phone: +49 661 6003-0
Fax: +49 661 6003-607
Email: mail@jumo.net
Internet: www.jumo.net

JUMO Instrument Co. Ltd.
JUMO House
Temple Bank, Riverway
Harlow, Essex, CM20 2DY, UK
Phone: +44 1279 63 55 33
Fax: +44 1279 62 50 29
Email: sales@jumo.co.uk
Internet: www.jumo.co.uk

JUMO Process Control, Inc.
6733 Myers Road
East Syracuse, NY 13057, USA
Phone: +1 315 437 5866
Fax: +1 315 437 5860
Email: info.us@jumo.net
Internet: www.jumousa.com

Electrical data

	Switching capacity AC 40 to 480 V	Overvoltage category	Max. ambient temperature on switching head	Electrical connection	Switching function
Normally closed contact (NC)	0.5 to 20 A (3.3 A)[a] cos φ = 1 (0.6)	III	125 °C	Tab connector 6.3 mm (standard)	3-pole with 1-pole normally open contact (NO)
	0.5 to 30 A (5.0 A)[a] cos φ = 1 (0.6)		80 °C		
	0.5 to 20 A (3.3 A)[a] cos φ = 1 (0.6)		125 °C	Tab connector 6.3 mm (standard) with plug adapter up to 4 mm²	3-pole without normally open contact (NO)
	0.5 to 30 A (5.0 A)[a] cos φ = 1 (0.6)		80 °C		
	0.5 to 16 A (2.6 A)[a] cos φ = 1 (0.6)		125 °C	Screw connection up to 2.5 mm²	
Normally open contact (NO)	0.5 to 2 A (0.3 A)[a] cos φ = 1 (0.6)	-	-	-	-
Normally closed contact (NC)	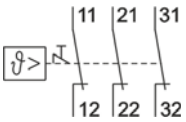		Normally closed contact (NC) with 1-pole normally open contact (NO)	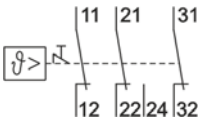	
Min. contact capability for switching reliability	Type of contact	AC/DC	per switching path		
	Silver contact	24 V	0.1 A		
	Gold contact	10 V	0.005 A		
Frequency	48 to 63 Hz				
Mode of operation STB	2BFHKLN	With trip-free function			
	2BFKLN	Without trip-free function			
Pollution degree	2	According to DIN EN 60730-1			
Protection rating	I				

[a] Inductive load

Environmental influences

Max. admissible ambient temperature	For transport and storage -30 to +125 °C		
Time constant $t_{0.632}$	< 45 s, measured in water bath	< 60 s, measured in oil bath	< 120 s, measured in air

JUMO GmbH & Co. KG
Delivery address: Mackenrodtstraße 14
36039 Fulda, Germany
Postal address: 36035 Fulda, Germany
Phone: +49 661 6003-0
Fax: +49 661 6003-607
Email: mail@jumo.net
Internet: www.jumo.net

JUMO Instrument Co. Ltd.
JUMO House
Temple Bank, Riverway
Harlow, Essex, CM20 2DY, UK
Phone: +44 1279 63 55 33
Fax: +44 1279 62 50 29
Email: sales@jumo.co.uk
Internet: www.jumo.co.uk

JUMO Process Control, Inc.
6733 Myers Road
East Syracuse, NY 13057, USA
Phone: +1 315 437 5866
Fax: +1 315 437 5860
Email: info.us@jumo.net
Internet: www.jumousa.com

Approvals and approval marks

VDE	
Testing agency	VDE Offenbach (Germany)
Certificate/certification numbers	40050653
Inspection basis	DIN EN 60730-1, DIN EN 60730-2-9 The product also fullfills the requirements according to IEC 60730-1.
Valid for	Type 602090/080
UL	
Testing agency	UL Germany
Certificate/certification numbers	E66358
Inspection basis	UL 60730-1, UL 60730-2-9, CAN/CSA E60730-1, CSA E60730-2-9
Valid for	Type 602090/080
EAC[a]	
Testing agency	-
Certificate/certification numbers	0198420
Inspection basis	TR ZU 004/2011 (LVD)
Valid for	Type 602090/080

[a] Russian documentation upon request

JUMO GmbH & Co. KG
Delivery address: Mackenrodtstraße 14
36039 Fulda, Germany
Postal address: 36035 Fulda, Germany
Phone: +49 661 6003-0
Fax: +49 661 6003-607
Email: mail@jumo.net
Internet: www.jumo.net

JUMO Instrument Co. Ltd.
JUMO House
Temple Bank, Riverway
Harlow, Essex, CM20 2DY, UK
Phone: +44 1279 63 55 33
Fax: +44 1279 62 50 29
Email: sales@jumo.co.uk
Internet: www.jumo.co.uk

JUMO Process Control, Inc.
6733 Myers Road
East Syracuse, NY 13057, USA
Phone: +1 315 437 5866
Fax: +1 315 437 5860
Email: info.us@jumo.net
Internet: www.jumousa.com

Dimensions

Type 602090

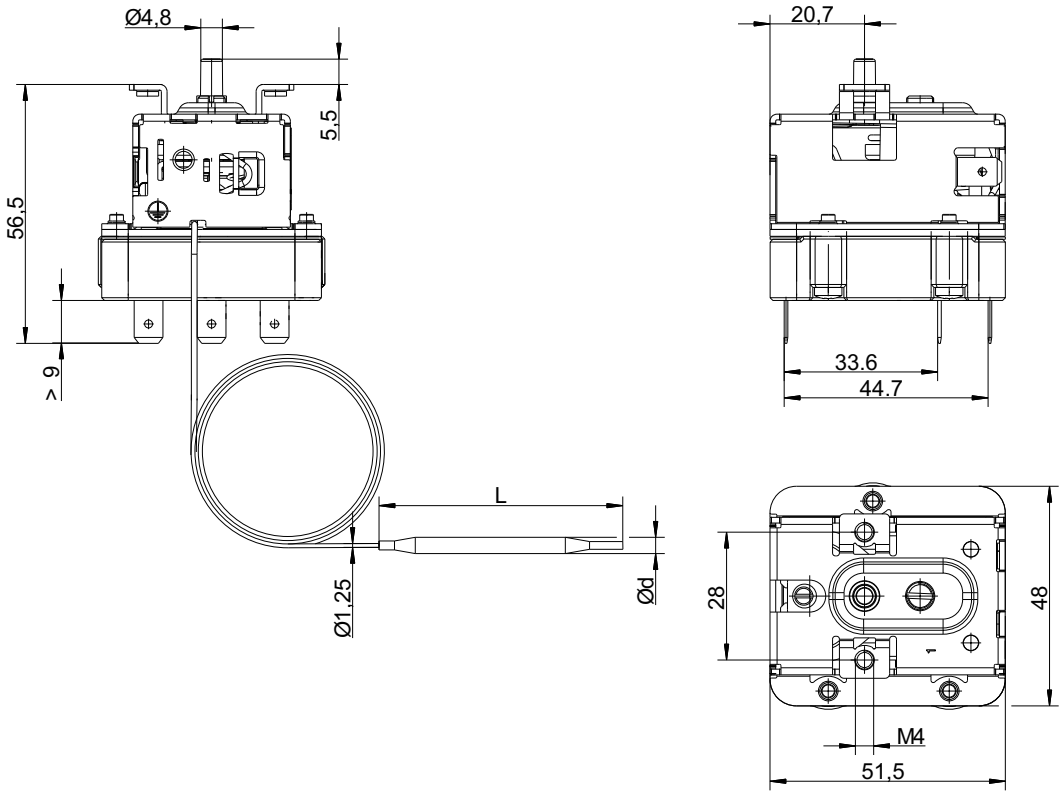

3-pole normally closed contact (NC) with 1-pole normally open contact (NO)

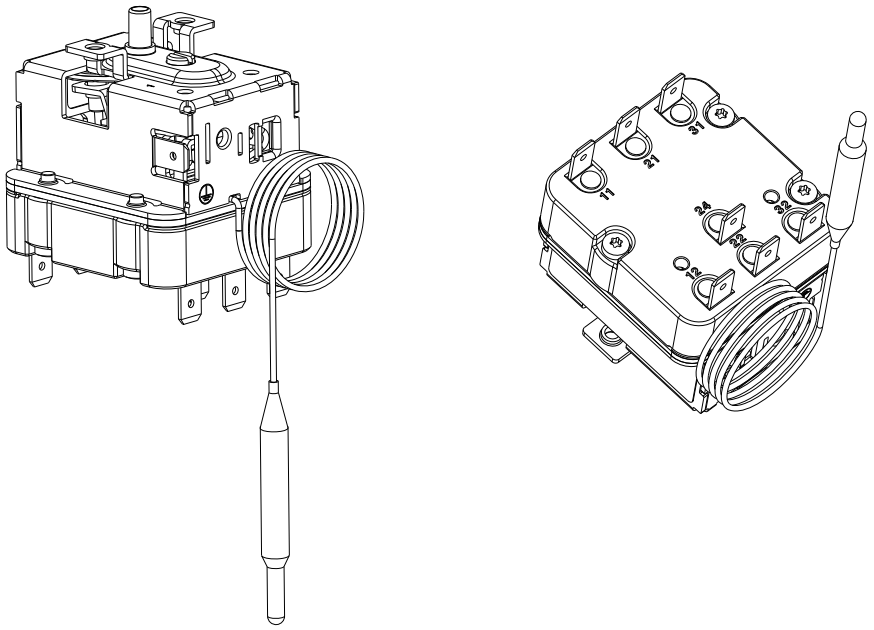

Electrical connection: tab connector 6.3 mm (standard)

JUMO GmbH & Co. KG
Delivery address: Mackenrodtstraße 14
36039 Fulda, Germany
Postal address: 36035 Fulda, Germany
Phone: +49 661 6003-0
Fax: +49 661 6003-607
Email: mail@jumo.net
Internet: www.jumo.net

JUMO Instrument Co. Ltd.
JUMO House
Temple Bank, Riverway
Harlow, Essex, CM20 2DY, UK
Phone: +44 1279 63 55 33
Fax: +44 1279 62 50 29
Email: sales@jumo.co.uk
Internet: www.jumo.co.uk

JUMO Process Control, Inc.
6733 Myers Road
East Syracuse, NY 13057, USA
Phone: +1 315 437 5866
Fax: +1 315 437 5860
Email: info.us@jumo.net
Internet: www.jumousa.com

3-pole normally closed contact (NC) with screw connection

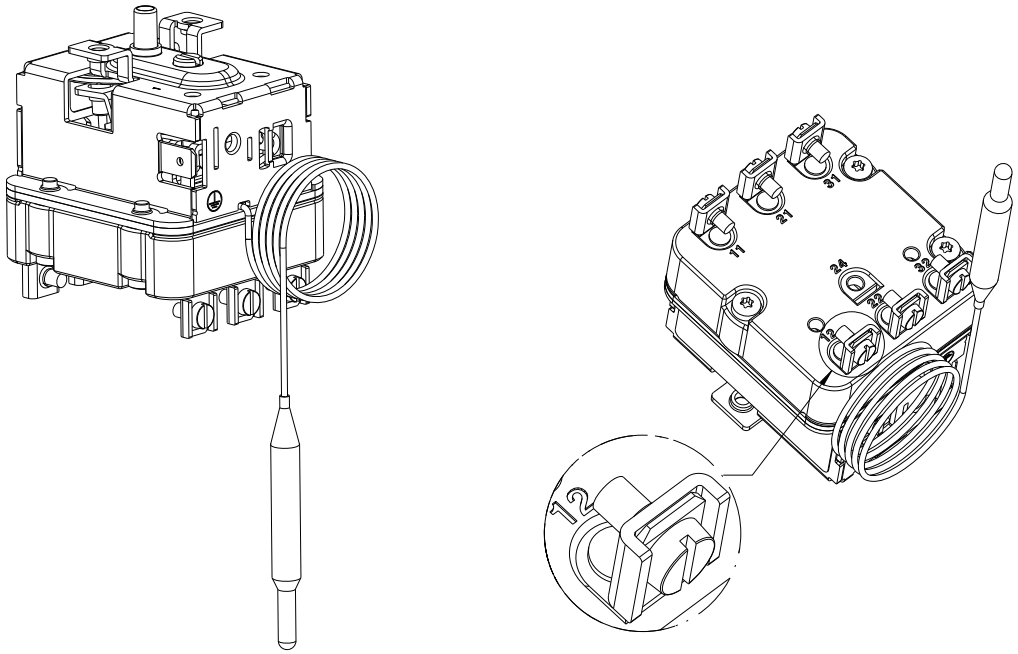

Electrical connection: screw connection up to 2.5 mm²

3-pole normally closed contact (NC) with plug adapter

Recommended:
- for easy cable assembly
- at current load >16 A (to reduce contact resistances)

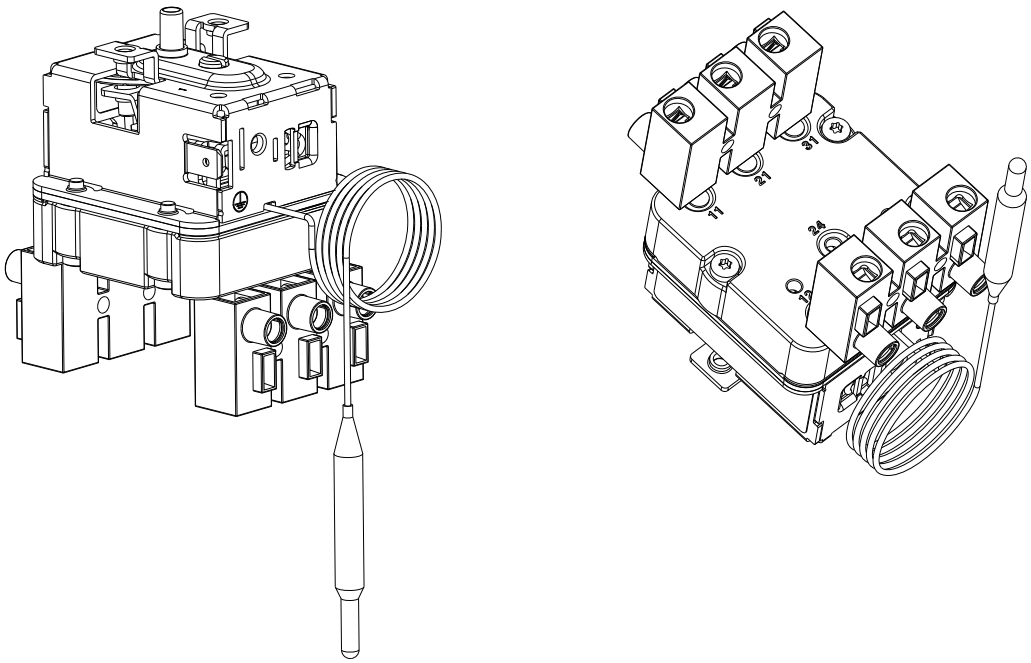

Electrical connection: plug adapter up to 4 mm²

The plug adapter is available as an extra code or as an accessory with the part no. 00689177 (2 pieces are required for each device).

JUMO GmbH & Co. KG
Delivery address: Mackenrodtstraße 14
36039 Fulda, Germany
Postal address: 36035 Fulda, Germany
Phone: +49 661 6003-0
Fax: +49 661 6003-607
Email: mail@jumo.net
Internet: www.jumo.net

JUMO Instrument Co. Ltd.
JUMO House
Temple Bank, Riverway
Harlow, Essex, CM20 2DY, UK
Phone: +44 1279 63 55 33
Fax: +44 1279 62 50 29
Email: sales@jumo.co.uk
Internet: www.jumo.co.uk

JUMO Process Control, Inc.
6733 Myers Road
East Syracuse, NY 13057, USA
Phone: +1 315 437 5866
Fax: +1 315 437 5860
Email: info.us@jumo.net
Internet: www.jumousa.com

3-pole normally closed contact (NC) with sealing gland, incl. cylindrical probe

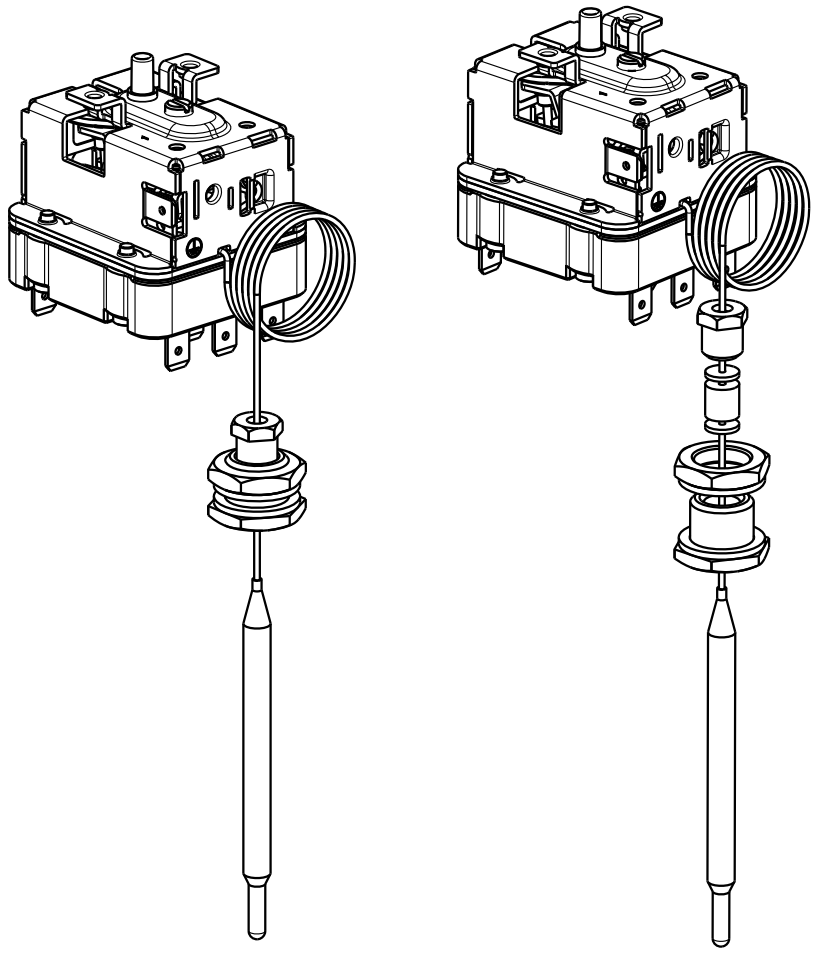

Electrical connection: tab connector 6.3 mm (standard)

JUMO GmbH & Co. KG
Delivery address: Mackenrodtstraße 14
36039 Fulda, Germany
Postal address: 36035 Fulda, Germany
Phone: +49 661 6003-0
Fax: +49 661 6003-607
Email: mail@jumo.net
Internet: www.jumo.net

JUMO Instrument Co. Ltd.
JUMO House
Temple Bank, Riverway
Harlow, Essex, CM20 2DY, UK
Phone: +44 1279 63 55 33
Fax: +44 1279 62 50 29
Email: sales@jumo.co.uk
Internet: www.jumo.co.uk

JUMO Process Control, Inc.
6733 Myers Road
East Syracuse, NY 13057, USA
Phone: +1 315 437 5866
Fax: +1 315 437 5860
Email: info.us@jumo.net
Internet: www.jumousa.com

Order details

	(1)	**Basic type**
602090		JUMO heatTHERM P300 – 3-phase panel-mounted thermostat
	(2)	**Basic type extension**
007		Temperature limiter (TB), permanently set
080		Safety temperature limiter (STB), permanently set
	(3)	**Contact combinations – normally closed contact (NC) and normally open contact (NO)**
030		3-pole normally closed contact (NC), without normally open contact (NO)
031		3-pole normally closed contact (NC), with 1 normally open contact (NO)
	(4)	**Control range**
60		60 °C
...		...
365		365 °C
	(5)	**Limit value**
000		None
	(6)	**Switching differential**
700		700 mm
1000		1000 mm
...		Special length upon request
	(7)	**Capillary length**
20		CrNi (stainless steel)
40		Cu (copper)
	(8)	**Capillary insulating tube length**
0		0
170		170 mm
...		Special length, specifications in plain text
	(9)	**Capillary insulating tube material**
00		None
70		PTFE
86		PVC
	(10)	**Process connection**
10		Plain cylindrical probe
67		Sealing gland M9, nickel-plated brass
69		Sealing gland M14, nickel-plated brass
	(11)	**Temperature probe diameter**
4		4 mm
6		6 mm
	(12)	**Temperature probe material**
20		CrNi (stainless steel)
40		Cu (copper)
	(13)	**Extra codes**
000		None
699		Screw connection up to 2.5 mm²
710		Central mounting M10 × 1
964		Plug adapter up to 4 mm²
972		Probe und capillary welded

JUMO GmbH & Co. KG
Delivery address: Mackenrodtstraße 14
36039 Fulda, Germany
Postal address: 36035 Fulda, Germany
Phone: +49 661 6003-0
Fax: +49 661 6003-607
Email: mail@jumo.net
Internet: www.jumo.net

JUMO Instrument Co. Ltd.
JUMO House
Temple Bank, Riverway
Harlow, Essex, CM20 2DY, UK
Phone: +44 1279 63 55 33
Fax: +44 1279 62 50 29
Email: sales@jumo.co.uk
Internet: www.jumo.co.uk

JUMO Process Control, Inc.
6733 Myers Road
East Syracuse, NY 13057, USA
Phone: +1 315 437 5866
Fax: +1 315 437 5860
Email: info.us@jumo.net
Internet: www.jumousa.com

	(1)		(2)		(3)		(4)		(5)		(6)		(7)	
Order code		/		-		-		-		-		-		-
Order example	602090	/	080	-	031	-	365	-	000	-	700	-	0	-

	(8)		(9)		(10)		(11)		(12)		(13)	
		-		-		-		-		/		[a]
	120	-	86	-	10	-	4	-	20	/	972	

[a] List extra codes in sequence and separate using commas.

Stock versions

Order code	Limit value, STB	Capillary length, STB	Process-connection	Part no.
602090/080-031-000-95-000-0-700-20-170-86-10-0-6-20/972	95 °C	700 mm	Plain cylindrical probe	60003431
602090/080-031-000-110-000-0-700-20-170-86-10-0-6-20/972	110 °C	700 mm	Plain cylindrical probe	60003432
602090/080-031-000-360-000-0-700-20-170-86-10-0-4-20/972	360 °C	700 mm	Plain cylindrical probe	60003433

JUMO GmbH & Co. KG
Lieferadresse:
Mackenrodtstraße 14,
36039 Fulda, Alemania
Postadresse:
36035 Fulda, Alemania
Telefon: +49 661 6003-0
Fax: +49 661 6003-607
E-Mail: mail@jumo.net
Internet: www.jumo.net

JUMO HUNGÁRIA KFT.
Számadó utca 19
1118 Budapest, Hungária
Telefon: +36 14670835
Fax: +36 14670840
E-Mail: info.hu@jumo.net
Internet: www.jumo.hu

ATH termosztát

Jellemzők

- DIN EN 14597 szerinti kivitel
- Nyomástartó berendezésekről szóló 2014/68/EU irányelv
- Erős ház (IP54-es védettség)
- Mikrokapcsoló
- Nyomásesésnél önfelügyelet (STB/STW [STB])
- Biztonsági lekapcsolás (STB/STW [STB])
- Szabályozási tartomány -50[1]–+500 °C

ATH-1 (Típus 603021/01-1-...)

Rövid leírás

A termosztátok a különféle hőfolyamatokat felügyelik és szabályozzák. Az ATH típusú készülékekből kapható TR hőmérsékletszabályozó, TW hőmérsékletőr, STW (STB) biztonsági hőmérsékletőr és STB biztonsági hőmérséklethatároló. Az STB hiba esetén üzembiztos állapotba helyezi a felügyelt berendezést.

A termosztátok működése a folyadéktágulásra épül. Elektromos kapcsolóelemként mikrokapcsoló szolgál.

Kapcsolófunkciók

TR hőmérsékletszabályozó és TW hőmérsékletőr
Ha a hőmérsékletérzékelőnél fennálló hőmérséklet meghaladja a beállított határértéket, a mikrokapcsoló annak megfelelően nyitja vagy zárja az áramkört. Ha a beállított határérték alá kerül (a kapcsolási különbség értékével) a mikrokapcsoló ismét a kiindulási helyzetbe áll.

Visszakapcsolásgátló az STB biztonsági hőmérséklethatárolónál
Ha a hőmérsékletérzékelőnél fennálló hőmérséklet meghaladja a beállított határértéket, akkor az áramkör nyit és a mikrokapcsoló mechanikusan reteszelődik. Miután a hőmérséklet kb. 10%-kal a határérték alá csökkent (kb. 15%-kal +350 °C feletti határértékbeállításnál), a mikrokapcsolót kézzel ki szabad oldani.

Az STW biztonsági hőmérsékletőr használata STB biztonsági hőmérséklethatárolóként
Ilyenkor a termosztátot követő áramkörnek meg kell felelnie a DIN EN 14597 ésa a VDE 0116 előírásainak.

Önfelügyelet az STB biztonsági hőmérséklethatároló és az STW (STB) biztonsági hőmérsékletfelügyelet esetén
A mérőrendszer meghibásodása esetén, azaz, ha a tágulófolyadék elfolyik, az STB és az STW (STB) membránján csökken a nyomás és az áramkör nyitva marad. A kioldás nem lehetséges. Ha az STW (STB) és az STB érzékelő negatív hőmérséklettartományt jelez, nyílik az áramkör, és hőmérsékletemelkedés esetén a visszakapcsoló gombot kézzel kell működtetni. Az STW (STB) önállóan visszakapcsol.

ATH-70 (Típus 603021/70-2-...)

[1] Külön kérésre.

Engedélyezések és vizsgálati jelzések (lásd műszaki adatok)

JUMO GmbH & Co. KG
Lieferadresse:
Mackenrodtstraße 14,
36039 Fulda, Alemania
Postadresse:
36035 Fulda, Alemania
Telefon: +49 661 6003-0
Fax: +49 661 6003-607
E-Mail: mail@jumo.net
Internet: www.jumo.net

JUMO HUNGÁRIA KFT.
Számadó utca 19
1118 Budapest, Hungária
Telefon: +36 14670835
Fax: +36 14670840
E-mail: info.hu@jumo.net
Internet: www.jumo.hu

Műszaki adatok

Szabályozási tartomány és hőmérséklet-érzékelő

	Folyadéktöltésű				
Típus	**Szabályozási/ határérték tartományok** **°C**	**Max. megengedett érzékelő-hőmérséklet** **°C**	**Max. távvezeték-hossz** **mm**	**Érzékelőhossz, „L” méret Érzékelő-Ø „d” = 6 mm[a]** **mm**	
				Ø 6	**Ø 8**
ATH-1, ATH-2	-20–+50	60	5000	141	92
	-10–+40	50		185	115
	0–50	60		185	115
	0–100	125		107	75
	20–90	115		138	91
	20–120	140		106	75
	20–150	175		88	65
	30–110	135		125	84
	50–200	230		101	72
	50–250	290		73	54
	50–300	345		63	49
	50–350	405		53	–
	60–130	150		135	90
ATH-20, ATH-70	20–150	175	5000	77	60
	30–110	135		108	75
	50–250	290		64	49
	50–300	345		55	–
	60–130	150		116	79

	Gáztöltésű				
ATH-1, ATH-2	20–400	460	1000	278	158
	20–500	575	2000	148	92
	20–500	575	4000	202	119
ATH-20, ATH-70	20–400	460	1000	176	106
	20–500	575	2000	127	81
	20–500	575	4000	202	119

[a] Szabványos

Távvezeték és hőmérséklet-érzékelő

Típus	Skála végérték	Távvezeték	Hőmérsékletérzékelő
ATH-..	legfeljebb 200 °C	Réz (Cu), Ø 1,5 mm, Nyersanyag-sz. Cu-DHP	Réz (Cu), Nyersanyag-sz. Cu-DHP, keményforrasztá-sú
	legfeljebb 350 °C	Réz (Cu), Ø 1,5 mm, Nyersanyag-sz. Cu-DHP	Nemesacél (CrNi), Nyersanyag-sz. 1.4571, keményforrasztású
	legfeljebb 500 °C	Nemesacél (CrNi), Ø 1,5 mm	Nemesacél (CrNi), Nyersanyag-sz. 1.4571, hegesztett
	legfeljebb 350 °C	Nemesacél (CrNi), Ø 1,5 mm	Nemesacél (CrNi), Nyersanyag-sz. 1.4571, hegesztett
Távvezeték-hossz	Szabványos: 1000 mm, max. 5000 mm		
A távvezeték legkisebb hajlítási sugara	5 mm		

JUMO GmbH & Co. KG
Lieferadresse:
Mackenrodtstraße 14,
36039 Fulda, Alemania
Postadresse:
36035 Fulda, Alemania
Telefon: +49 661 6003-0
Fax: +49 661 6003-607
E-Mail: mail@jumo.net
Internet: www.jumo.net

JUMO HUNGÁRIA KFT.
Számadó utca 19
1118 Budapest, Hungária
Telefon: +36 14670835
Fax: +36 14670840
E-mail: info.hu@jumo.net
Internet: www.jumo.hu

Elektromos adatok

Kapcsolófunkció	TR, TW, STW (STB) Mikrokapcsoló váltóérintkezővel	STB (-70) Mikrokapcsoló nyitóérintkezővel és bekapcsolásgátlóval	STB (-70/574) Mikrokapcsoló nyitó érintkezővel, bekapcsolásgátlóval és kiegészítő jelérintkezővel
max. kapcsolási teljesítmény	AC 230 V +10%, 10 (2)[a] A, cos φ = 1 (0,6)[a] DC 230 V +10%, 0,25 A		
ha a kapcsolási különbség 1,5% és 2%	AC 230 V +10%, 6 (1,2)[a] A, cos φ = 1 (0,6)[a]	–	–
	Aranyozott mikrokapcsoló, típuskiegészítés 702 (csak 3%, 5% és 7% különbség kapcsolásához), AC/DC 24 V, 0,1 A, érintkezési ellenállás 2,5–10 mΩ		

[a] Induktív terhelések

Érintkezési biztonság	A lehető legnagyobb biztonság érdekében javasoljuk, hogy a legkisebb terhelés értéke legyen:
ezüst érintkező esetén	AC/DC 24 V, 100 mA
aranyozott (típuskiegészítés 702)	AC/DC 10 V, 5 mA

Környezeti hatások

Kapcsolási különbség %-ban szabályozó-/határérték-tartomány esetén	Névleges érték	Lehetséges tényleges érték	Névleges érték	Lehetséges tényleges érték	
	Folyadéktöltésű		Gáztöltésű		
Kapcsolófunkció TR, TW	3	3 max. 4	5	4 max. 8	Szabványos
	6	6 max. 8	9	8 max. 12	igény szerint
	1,5	1 max. 2	2	1,5 max. 2,5	Többletköltség
	Folyadéktöltésű		Gáztöltésű		
Kapcsolófunkció STW (STB)	5	4 max. 6	7	5 max. 12	Szabványos
	9	8 max. 11	9	8 max. 16	igény szerint
	2	1 max. 3	2	1,5 max. 3	Többletköltség
Kapcsolási pontosság % határérték tartományhoz viszonyítva					
Kapcsolófunkció TR, TW	A skála felső harmadán ±1,5%, a skála elején ±6%				
Kapcsoló funkció STW (STB), STB	A skála felső harmadán +0/-5%, a skála elején +0/-10%				

Környezetri hőmérséklet behatása	A szabályozási és határérték tartományra vonatkozóan Ha a kapcsolófejnél a környezeti hőmérséklet eltér a beszabályozott 22 °C-os környezeti hőmérséklettől, akkor a kapcsolási pont eltolódik. Magasabb környezeti hőmérséklet = alacsonyabb kapcsolási pont Alacsonyabb környezeti hőmérséklet = magasabb kapcsolási pont					
Termosztát skála végértéke	< 200 °C		≥ 200 °C ≤ 350 °C		> 350 °C ≤ 500 °C	
Kapcsolófunkció	TR, TW	STW (STB), STB	TR, TW	STW (STB), STB	TR, TW	STW (STB), STB
Hatása a kapcsolófejre	0,08%/K	0,17%/K	0,06%/K	0,13%/K	0,14%/K	0,12%/K
Hatása a távvezetékre méterenként	0,047%/K	0,054%/K	0,09%/K	0,011%/K	0,04%/K	0,03%/K
Megengedett tárolási hőmérséklet	-50–+80 °C, ill. a max. megengedett környezeti hőmérsékletig, lásd típustábla					
Megengedett környezeti hőmérséklet használat közben	Lásd típustábla					
Névleges hossz (NL)	DIN 16257 szerint, NL 0-tól NL 90-ig (más NL értékek kérésre)					

JUMO GmbH & Co. KG
Lieferadresse:
Mackenrodtstraße 14,
36039 Fulda, Alemania
Postadresse:
36035 Fulda, Alemania
Telefon: +49 661 6003-0
Fax: +49 661 6003-607
E-Mail: mail@jumo.net
Internet: www.jumo.net

JUMO HUNGÁRIA KFT.
Számadó utca 19
1118 Budapest, Hungária
Telefon: +36 14670835
Fax: +36 14670840
E-mail: info.hu@jumo.net
Internet: www.jumo.hu

Burkolat

Nyersanyag	
Házfedél	Szabvány: polikarbonát, ütésálló, színe: kavicsszürke RAL 7032
	Típuskiegészítés 701: alumíniumöntvény, lakkozott, szín: kavicsszürke RAL 7032
Házaljl	Szabvány: alumíniumöntvény, lakkozott, szín: antrazitszürke RAL 7015
Előírt érték beállítása	
Kapcsolófunkció TR	A kapcsolási pont kívülről a forgógombbal állítható
Kapcsolófunkció TW, STW (STB), STB	A kapcsolási pont a házfedél levétele után csavarhúzóval állítható
Védelmi osztály	IP54, DIN EN 60529 szerint
Kabelbevezetés	M20 × 1,5 fojtócsonk, tömítési tartomány 8–10 mm (szabvány)
Súly	Kb. 500 g
Kapcsolófej rögzítés Típus ATH távvezetékkel	
Szabványos	Csavarkötés M18 × 1 záróanyával a házcsapon, távvezeték kivezetés a házcsapon
Típuskiegészítés: 248	Fali tartó
Típuskiegészítés: 711	2 csavarral a ház alján át, távvezeték kilépés a ház oldalán, műanyag fedél és alj
Típuskiegészítés: 764	Acéllemez rögzítőkarima, távvezetéki kivezetés a házcsapon

Folyamatcsatlakozás

ATH típus merev szárral	
Skála végérték legfeljebb 150 °C	Folyamatcsatlakozás 20: becsavarozható védőhüvely DIN 3852/2 szerinti A alakú G 1/2" méretű csavaros csappal
Skála végérték 150 °C fölött	Folyamatcsatlakozás 30: becsavarozható védőhüvely DIN 3852/2 szerinti A alakú G 1/2" méretű csavaros csappal, és toldódarab, hogy a háznál maximálisan megengedett hőmérsékletet ne lépje túl
ATH típus távvezetékkel	Folyamatcsatlakozás 10: sima körérzékelő (szabványos) Folyamatcsatlakozás 20: becsavarozható védőhüvely (kérésre) Becsavarozható védőhüvely a DIN 3852/2 szerinti A alakú, G 1/2" méretű csavaros csappal, valamint szorítódarab rögzítőcsavarral az érzékelő rögzítéséhez
Nyersanyag	
Folyamatcsatlakozás 20	
legfeljebb 150 °C	CuZn, nikkelbevonatú, szabványos
150 °C fölött	CrNi
Folyamatcsatlakozás 30	
150 °C fölött	CrNi
Beépítési hossz	Szabványos: 100, 120, 150, 200 vagy 300 mm (igény szerint más hossz is)
Merülőcső-Ø	D = 8 mm, D = 10 mm

⇨ További folyamatcsatlakozókat és védőtokokat lásd a 606710 számú típuslapon

JUMO GmbH & Co. KG
Lieferadresse:
Mackenrodtstraße 14,
36039 Fulda, Alemania
Postadresse:
36035 Fulda, Alemania
Telefon: +49 661 6003-0
Fax: +49 661 6003-607
E-Mail: mail@jumo.net
Internet: www.jumo.net

JUMO HUNGÁRIA KFT.
Számadó utca 19
1118 Budapest, Hungária
Telefon: +36 14670835
Fax: +36 14670840
E-mail: info.hu@jumo.net
Internet: www.jumo.hu

Engedélyezések és vizsgálati jelzések

DIN	
Vizsgálati hely	DIN CERTCO/TÜV Süd
Tanúsítvány/vizsgálat száma	TW892
Vizsgálat alapja	DIN EN 14597
érvényes a következőre	ATH-2 (Típus 603021/02 [TW])
DIN	
Vizsgálati hely	DIN CERTCO/TÜV Süd
Tanúsítvány/vizsgálat száma	TR891
Vizsgálat alapja	DIN EN 14597
érvényes a következőre	ATH-1 (Típus 603021/01 [TR])
DIN	
Vizsgálati hely	DIN CERTCO/TÜV Süd
Tanúsítvány/vizsgálat száma	STW(STB)894S
Vizsgálat alapja	DIN EN 14597
érvényes a következőre	ATH-20 (Típus 603021/20 [STW (STB)])
DIN	
Vizsgálati hely	DIN CERTCO/TÜV Süd
Tanúsítvány/vizsgálat száma	STB895
Vizsgálat alapja	DIN EN 14597
érvényes a következőre	ATH-70 (Típus 603021/70 [STB])
DGRL	
Vizsgálati hely	TÜV Süd
Tanúsítvány/vizsgálat száma	Z-IS-TAF-MUC-17-11-2652099-021
Vizsgálat alapja	2014/68/EU, DIN EN 14597
érvényes a következőre	ATH-20 (Típus 603021/20 [STW (STB)]), ATH-70 (Típus 603021/70 [STB])
EAC[a]	
Vizsgálati hely	GOST Norm AG
Tanúsítvány/vizsgálat száma	0198420
Vizsgálat alapja	TR ZU 004/2011 (LVD)
érvényes a következőre	ATH (Típus 603021)

[a] Orosz nyelvű dokumentáció kérésre.

JUMO GmbH & Co. KG
Lieferadresse:
Mackenrodtstraße 14,
36039 Fulda, Alemania
Postadresse:
36035 Fulda, Alemania
Telefon: +49 661 6003-0
Fax: +49 661 6003-607
E-Mail: mail@jumo.net
Internet: www.jumo.net

JUMO HUNGÁRIA KFT.
Számadó utca 19
1118 Budapest, Hungária
Telefon: +36 14670835
Fax: +36 14670840
E-mail: info.hu@jumo.net
Internet: www.jumo.hu

Méret

Merev szárú kialakítás

ATH-1 (Típus 603021/01-1-...)

becsavarozható védőhüvellyel (folyamatcsatlakozó 20)

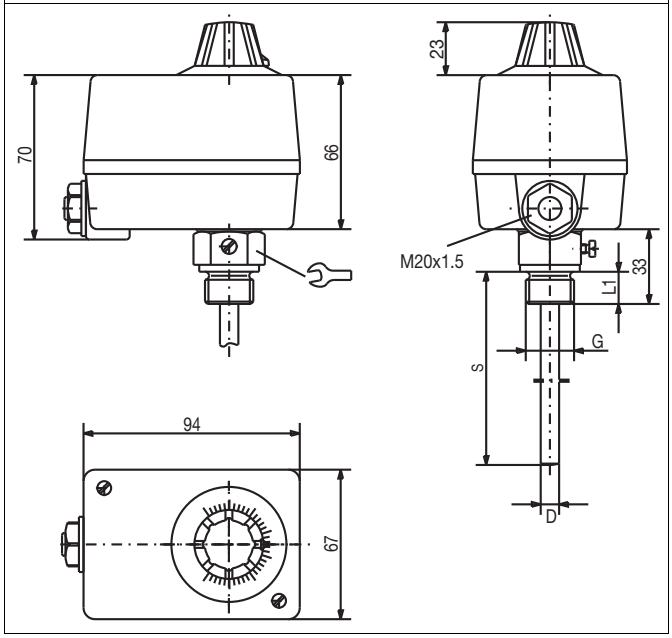

ATH-2 (Típus 603021/02-1-...),
ATH-20 (Típus 603021/20-1-...)

becsavarozható védőhüvellyel (folyamatcsatlakozó 20)

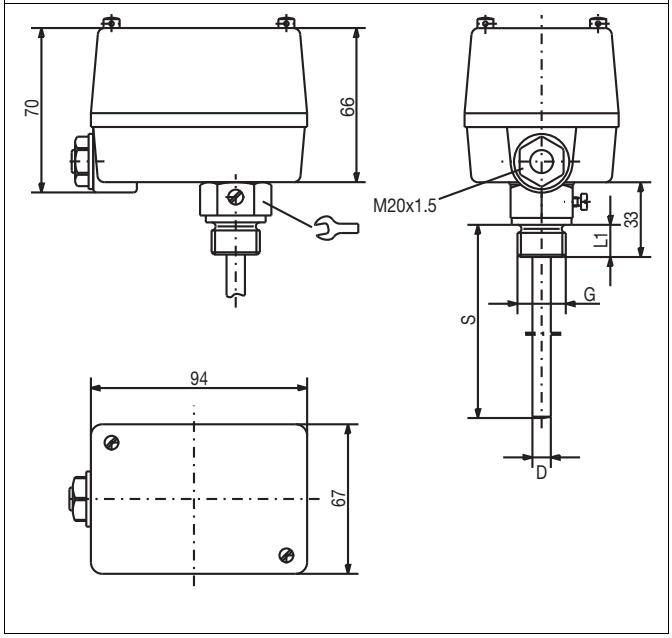

ATH-70 (Típus 603021/70-1-...),
ATH-70/574 (Típus 603021/70-1-.../574)

becsavarozható védőhüvellyel (folyamatcsatlakozó 20)

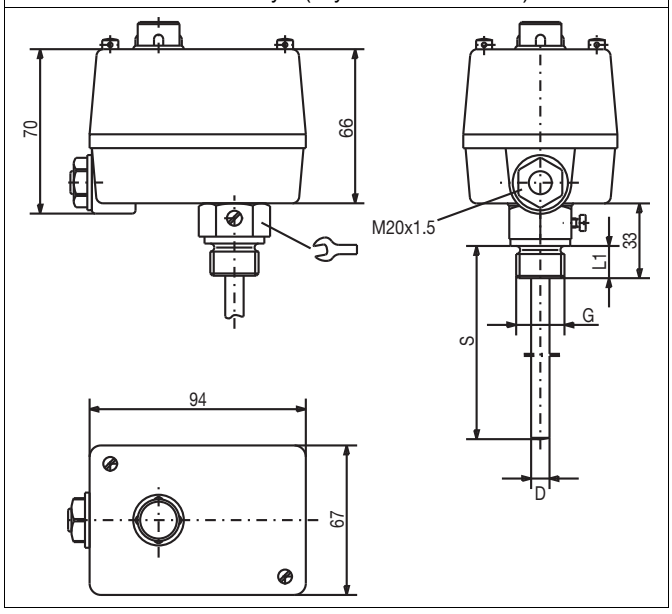

JUMO GmbH & Co. KG
Lieferadresse:
Mackenrodtstraße 14,
36039 Fulda, Alemania
Postadresse:
36035 Fulda, Alemania
Telefon: +49 661 6003-0
Fax: +49 661 6003-607
E-Mail: mail@jumo.net
Internet: www.jumo.net

JUMO HUNGÁRIA KFT.
Számadó utca 19
1118 Budapest, Hungária
Telefon: +36 14670835
Fax: +36 14670840
E-mail: info.hu@jumo.net
Internet: www.jumo.hu

Távvezetékes kialakítás

ATH-1 (Típus 603021/01-2-...)
sima érzékelő (folyamatcsatlakozás 10)

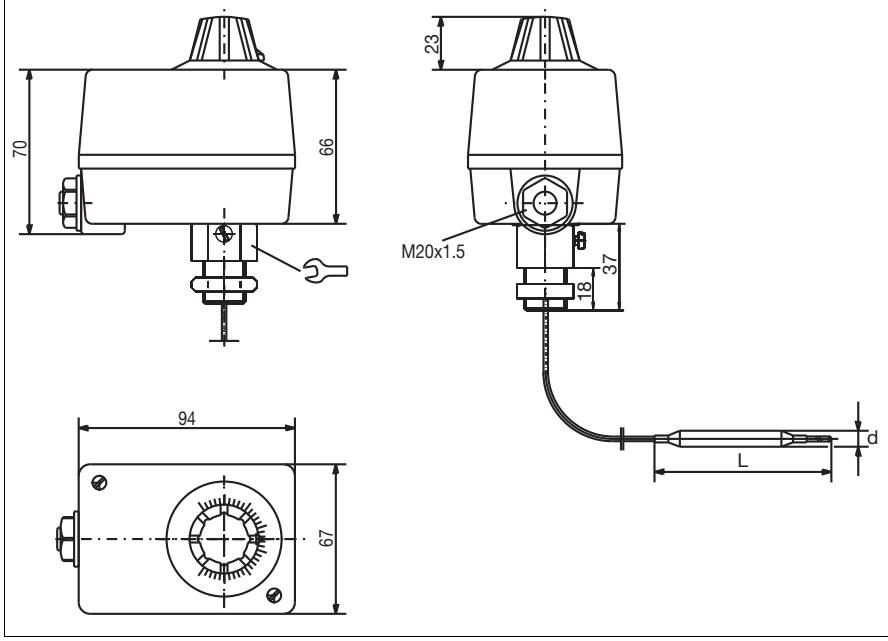

ATH-2 (Típus 603021/02-2-...),
ATH-20 (Típus 603021/20-2-...)
sima érzékelő (folyamatcsatlakozás 10)

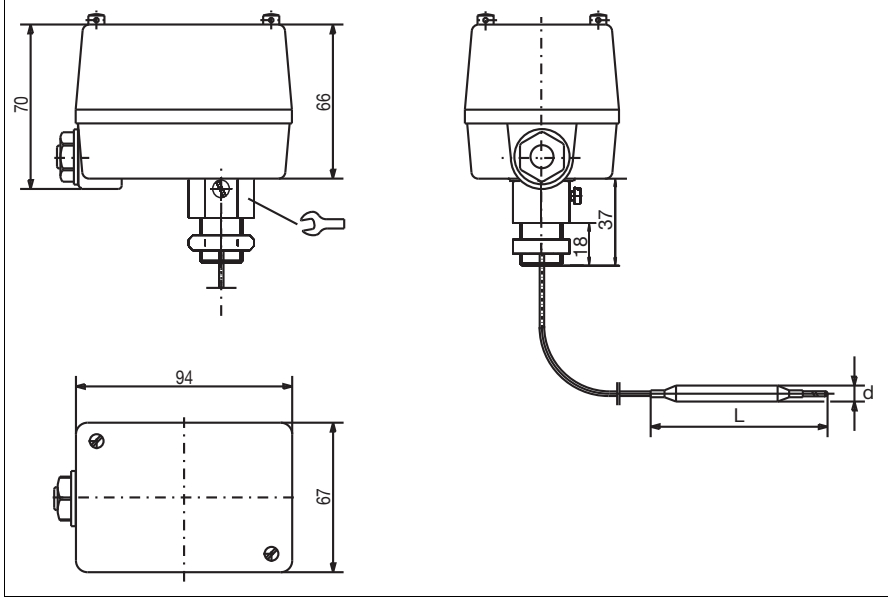

JUMO GmbH & Co. KG
Lieferadresse:
Mackenrodtstraße 14,
36039 Fulda, Alemania
Postadresse:
36035 Fulda, Alemania
Telefon: +49 661 6003-0
Fax: +49 661 6003-607
E-Mail: mail@jumo.net
Internet: www.jumo.net

JUMO HUNGÁRIA KFT.
Számadó utca 19
1118 Budapest, Hungária
Telefon: +36 14670835
Fax: +36 14670840
E-mail: info.hu@jumo.net
Internet: www.jumo.hu

ATH-70 (Típus 603021/70-2-...),
ATH-70/574 (Típus 603021/70-2-.../574)
sima érzékelő (folyamatcsatlakozás 10)

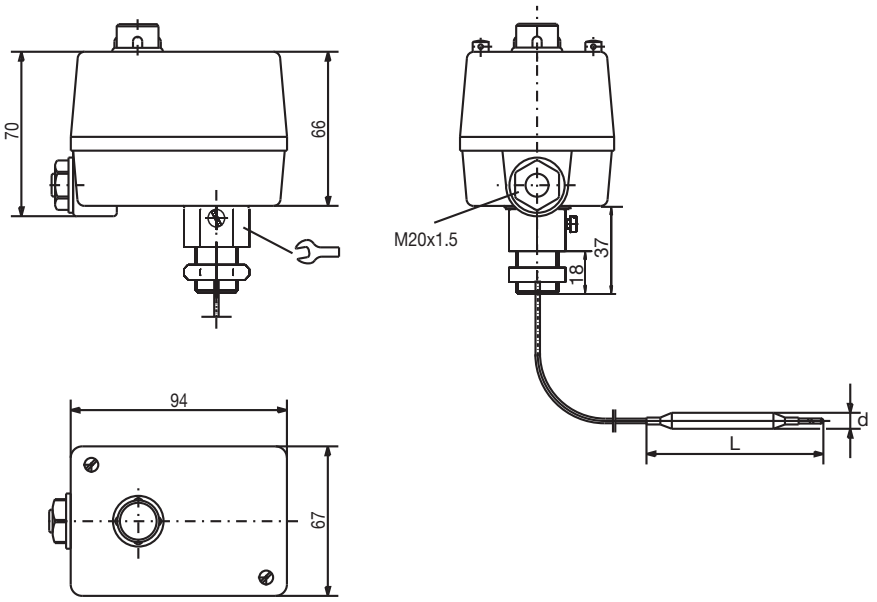

ATH-20/r[a] (Típus 603021/20-2-.../711),
ATH-70/r[a] (Típus 603021/70-2-.../711)
hegesztett hüvely hollandianyához, kúpos (folyamatcsatlakozás 42)

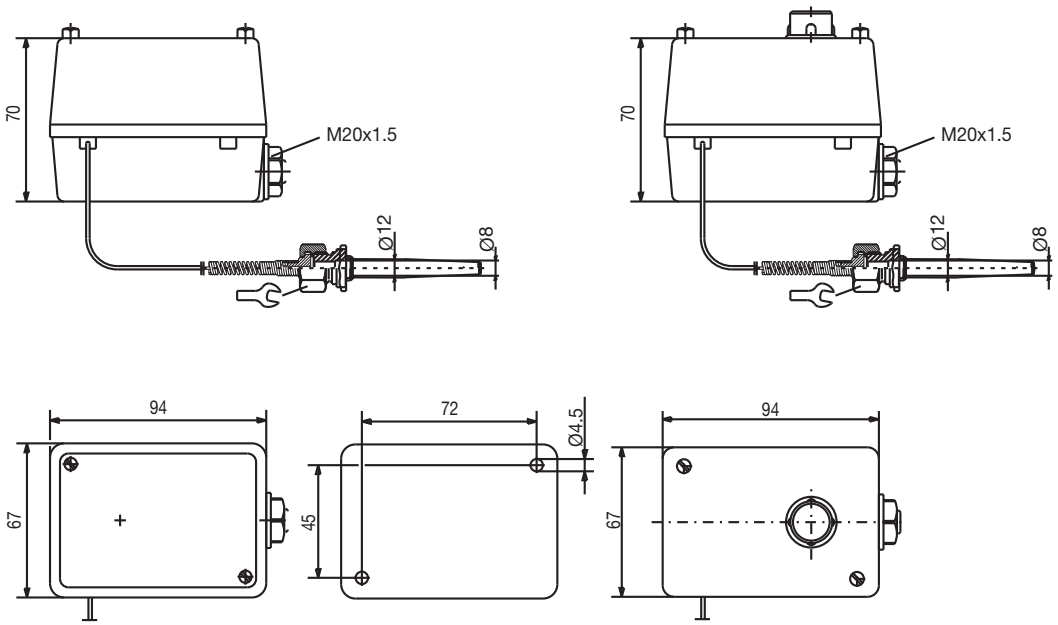

[a] r = kapcsolófej rögzítés (típuskiegészítés 711)

JUMO GmbH & Co. KG
Lieferadresse:
Mackenrodtstraße 14,
36039 Fulda, Alemania
Postadresse:
36035 Fulda, Alemania
Telefon: +49 661 6003-0
Fax: +49 661 6003-607
E-Mail: mail@jumo.net
Internet: www.jumo.net

JUMO HUNGÁRIA KFT.
Számadó utca 19
1118 Budapest, Hungária
Telefon: +36 14670835
Fax: +36 14670840
E-mail: info.hu@jumo.net
Internet: www.jumo.hu

Folyamatcsatlakozás

merev szárú kialakításokhoz

becsavarozható védőhüvely és toldódarab
150 °C feletti skála végértéknél (folyamatcsatlakozás 30)

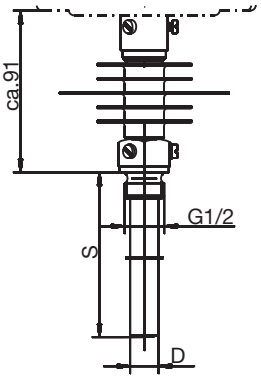

Becsavarozható védőhüvely és toldódarab, nyitott (folyamatcsatlakozás 31)

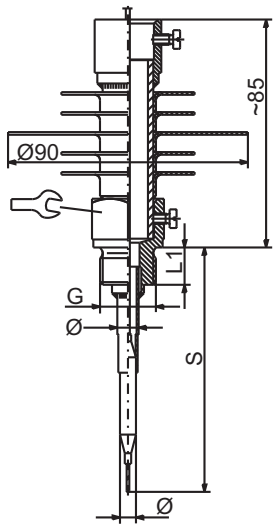

Kapcsolási rajz

A típuslapon található kapcsolási rajz szolgál információval a termékválasztáshoz.

Az elektromos csatlakoztatáshoz kizárólag a telepítési útmutatót vagy a kezelési útmutatót használja!

Csatlakoztatási rajzok

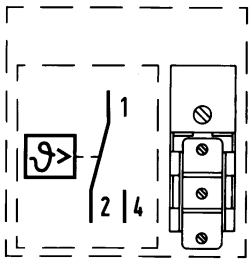

TR (Típus 603021/01-...),
TW (Típus 603021/02-...),
STW (STB) (Típus 603021/20-...)

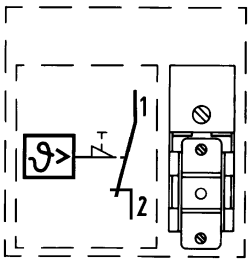

STB (Típus 603021/70-...)

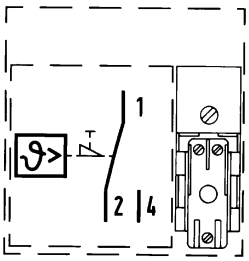

STB (Típus 603021/70-.../574)

JUMO GmbH & Co. KG
Lieferadresse:
Mackenrodtstraße 14,
36039 Fulda, Alemania
Postadresse:
36035 Fulda, Alemania
Telefon: +49 661 6003-0
Fax: +49 661 6003-607
E-Mail: mail@jumo.net
Internet: www.jumo.net

JUMO HUNGÁRIA KFT.
Számadó utca 19
1118 Budapest, Hungária
Telefon: +36 14670835
Fax: +36 14670840
E-mail: info.hu@jumo.net
Internet: www.jumo.hu

Rendelési adatok

	(1)	**Alaptípus**
603021		ATH termosztát
	(2)	**Alaptípus kiegészítés**
01		ATH-1 hőmérsékletszabályozó (TR)
02		ATH-2 hőmérsékletőr (TW)
20		ATH-20 biztonsági hőmérsékletőr (STW [STB])
70		ATH-70 biztonsági hőmérséklethatároló (STB)
	(3)	**Kiképzés**
1		Merev szár
2		Távvezeték
	(4)	**Szabályozási tartomány**
014		-20–+50 °C
016		-10–+40 °C
021		0–50 °C
025		0–100 °C
041		20–90 °C
042		20–120 °C
043		20–150 °C
045		20–400 °C
046		20–500 °C
052		30–110 °C
062		50–200 °C
063		50–250 °C
064		50–300 °C
066		60–130 °C
	(5)	**Kapcsolási különbség**
00		Nélkül
15		1,5%
20		2%
30		3%
50		5%
60		6%
70		7%
90		9%
	(6)	**Távvezeték-hossz**
0		Nélkül
1000		1000 mm
2000		2000 mm
3000		3000 mm
4000		4000 mm
5000		5000 mm
	(7)	**Távvezeték nyersanyag**
00		Nélkül
20		CrNi (nemesacél)
40		Cu (réz)

JUMO GmbH & Co. KG
Lieferadresse:
Mackenrodtstraße 14,
36039 Fulda, Alemania
Postadresse:
36035 Fulda, Alemania
Telefon: +49 661 6003-0
Fax: +49 661 6003-607
E-Mail: mail@jumo.net
Internet: www.jumo.net

JUMO HUNGÁRIA KFT.
Számadó utca 19
1118 Budapest, Hungária
Telefon: +36 14670835
Fax: +36 14670840
E-mail: info.hu@jumo.net
Internet: www.jumo.hu

	(8)	**Folyamatcsatlakozás**
10		Sík kerekérzékelő
20		Becsavarozható védőhüvely 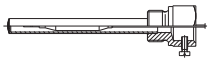
30		Becsavarozható védőhüvely és toldódarab 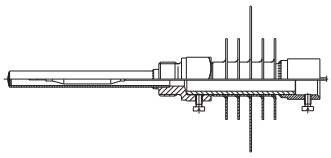
31		Becsavarozható védőhüvely és toldódarab, nyitott 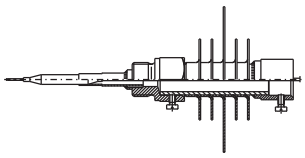
42		Hegesztett hüvely hollandianyához, kúpos 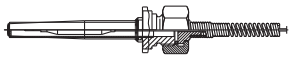
46		Hegesztett hüvely hollandianyához toldódarabbal, kúpos 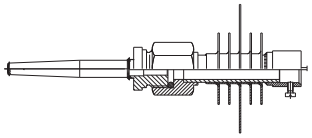
	(9)	**Folyamatcsatlakozás menetfajtája**
00		Nélkül
13		G 1/2"
14		G 3/4"
	(10)	**Folyamatcsatlakozás nyersanyaga**
00		Nélkül
20		CrNi (nemesacél)
46		CuZn (sárgaréz)
	(11)	**Beépítési hossz**
000		Védőhüvely nélkül
100		100 mm
120		120 mm
150		150 mm
200		200 mm
300		300 mm
400		400 mm
	(12)	**Merülőcső-átmérő**
00		Védőhüvely nélkül
8		8 mm
10		10 mm
	(13)	**Érzékelőátmérő**
6		6 mm
8		8 mm

JUMO GmbH & Co. KG
Lieferadresse:
Mackenrodtstraße 14,
36039 Fulda, Alemania
Postadresse:
36035 Fulda, Alemania
Telefon: +49 661 6003-0
Fax: +49 661 6003-607
E-Mail: mail@jumo.net
Internet: www.jumo.net

JUMO HUNGÁRIA KFT.
Számadó utca 19
1118 Budapest, Hungária
Telefon: +36 14670835
Fax: +36 14670840
E-mail: info.hu@jumo.net
Internet: www.jumo.hu

(14)	Típuskiegészítés
000	Nélkül
248	Fali tartó
574	Mikrokapcsoló váltóérintkezővel, visszakapcsolásgátló (csak STB esetén)
701	Házfedél alumíniumöntvényből
702	Aranyozott rugós kapcsolóérintkező (csak 3%, 5% és 7%-os eltérés kapcsoláshoz és STB esetén)
711	Kapcsolófej rögzítése 2 csavarral a házrészen keresztül
764	Acéllemez rögzítőkarima

⇨ További folyamatcsatlakozókat és védőtokokat lásd a 606710 számú típuslapon

	(1)		(2)		(3)		(4)		(5)		(6)		(7)		(8)	
Rendelési kulcs		/		–		–		–		–		–		–		–
Rendelési példa	603021	/	70	–	1	–	043	–	00	–	0	–	00	–	20	–

	(9)		(10)		(11)		(12)		(13)		(14)	
Rendelési kulcs		–		–		–		–		/		, ...[a]
Rendelési példa	13	–	20	–	100	–	8	–	6	/	574	

[a] Típuskiegészítéseket egymás után sorolja fel és vesszővel válassza el.

Raktárkialakítások

Távvezetékes kialakítás

Hőmérsékletszabályozó (TR), Típus 603021/01-2-...

Típus	Szabályozási és határérték tartomány °C	Kapcsolási különbség %	Távvezeték mm	Folyamat-csatlakozás	Érintkező-Ø × hossz mm	Alkatrészszám.
ATHf-1	-10–+40	3–4	1000	„10” sima kerekérzékelő	6 × 185	60001134
ATHf-1	0–100	3–4	1000		6 × 107	60001004
ATHf-1	20–150	3–4	1000		6 × 88	60000955
ATHf-1	50–300	3–4	1000		6 × 63	60001133
ATHf-1	20–500	5	1000		6 × 148	60002113

Hőmérsékletőr (TW), Típus 603021/02-2-...

Típus	Szabályozási és határérték tartomány °C	Kapcsolási különbség %	Távvezeték mm	Folyamat-csatlakozás	Érintkező-Ø × hossz mm	Alkatrészszám.
ATHf-2	0–50	3–4	1000	„10” sima kerekérzékelő	6 × 185	60000482
ATHf-2	0–100	3–4	1000		6 × 107	60000962
ATHf-2	0–100	3–4	2000		6 × 107	60001212
ATHf-2	20–150	3–4	1000		6 × 88	60000963
ATHf-2	20–200	3–4	2000		6 × 88	60001210
ATHf-2	50–200	3–4	1000		6 × 101	60000187
ATHf-2	50–300	3–4	1000		6 × 63	60001038
ATHf-2	50–300	3–4	2000		6 × 63	60001208
ATHf-2	20–500	5	1000		6 × 148	60002122

JUMO GmbH & Co. KG
Lieferadresse:
Mackenrodtstraße 14,
36039 Fulda, Alemania
Postadresse:
36035 Fulda, Alemania
Telefon: +49 661 6003-0
Fax: +49 661 6003-607
E-Mail: mail@jumo.net
Internet: www.jumo.net

JUMO HUNGÁRIA KFT.
Számadó utca 19
1118 Budapest, Hungária
Telefon: +36 14670835
Fax: +36 14670840
E-mail: info.hu@jumo.net
Internet: www.jumo.hu

Biztonsági hőmérséklethatároló (STB), Típus 603021/70-2-...

Típus	Szabályozási és határérték tartomány °C	Kapcsolási különbség %	Távvezeték mm	Folyamat-csatlakozás	Érintkező-Ø × hossz mm	Alkatrészszám.
ATHf-70	30–110	–	1000	„10” sima kerekérzékelő	6 × 108	60001136
ATHf-70	30–110	–	2000		6 × 108	60001206
ATHf-70	20–150	–	2000		6 × 77	60001205
ATHf-70/U	20–150	–	1000		6 × 77	60001525
ATHf-70	50–200	–	2000		6 × 85	60001204
ATHf-70/U	50–200	–	1000		6 × 85	60001290
ATHf-70	50–300	–	2000		6 × 55	60001191
ATHf-70/U	50–300	–	1000		6 × 55	60001528
ATHf-70/U	20–500	–	1000		6 × 127	60002088
ATHf-70/U	20–500	–	2000		6 × 127	60002099
ATHf-70/U/r	20–500	–	4000	„42” G 3/4"	200	60002262

Merev szárú kialakítás

Hőmérsékletszabályozó (TR), Típus 603021/01-1-...

Típus	Szabályozási és határérték tartomány °C	Kapcsolási különbség %	Folyamatcsatlakozás becsavarozható hüvely	Merülőcső-Ø × hossz mm	Alkatrészszám.
ATHs-1	-10–+40	3–4	„20” G 1/2"	8 × 200	60001517
ATHs-1	0–50	1,5	„20” G 1/2"	15 × 100 CrNi	60000634
ATHs-1	0–100	3–4	„20” G 1/2"	8 × 120 CrNi	60001548
ATHs-1	0–100	3–4	„20” G 1/2"	8 × 150	60001125
ATHs-1	0–100	1,5	„20” G 1/2"	8 × 200	60000174
ATHs-1	0–100	3–4	„20” G 1/2"	8 × 200	60001126
ATHs-1	20–150	3–4	„20” G 1/2"	8 × 100	60000481
ATHs-1	20–150	3–4	„20” G 1/2"	8 × 200	60001035
ATHs-1	20–150	3–4	„20” G 1/2"	8 × 300	60001127
ATHs-1	50–200	3–4	„30” G 1/2"	8 × 200 CrNi	60003316
ATHs-1	50–300	3–4	„30” G 1/2"	8 × 150 CrNi	60003317
ATHs-1	20–500	5	„30” G 1/2"	8 × 200 CrNi	60003318

Hőmérsékletőr (TW), Típus 603021/02-1-...

Típus	Szabályozási és határérték tartomány °C	Kapcsolási különbség %	Folyamatcsatlakozás becsavarozható hüvely	Merülőcső-Ø × hossz mm	Alkatrészszám.
ATHs-2	-10–+40	3–4	„20” G 1/2"	8 × 200	60001135
ATHs-2	0–50	1,5	„20” G 1/2"	15 × 100 CrNi	60001549
ATHs-2	20–90	1,5	„20” G 1/2"	15 × 100	60000177
ATHs-2	20–90	6–8	„20” G 1/2"	15 × 100	60000959
ATHs-2	20–90	3–4	„20” G 1/2"	8 × 150	60001129
ATHs-2	0–100	3–4	„20” G 1/2"	8 × 120 CrNi	60001552
ATHs-2	0–100	3–4	„20” G 1/2"	8 × 150	60000179
ATHs-2	0–100	3–4	„20” G 1/2"	8 × 200	60001039
ATHs-2	0–100	3–4	„20” G 1/2"	8 × 300	60001130
ATHs-2	20–150	3–4	„20” G 1/2"	8 × 100 CrNi	60001551
ATHs-2	20–150	3–4	„20” G 1/2"	8 × 200 CrNi	60001554
ATHs-2	20–150	3–4	„20” G 1/2"	8 × 300	60000182
ATHs-2	50–200	3–4	„30” G 1/2"	8 × 120 CrNi	60003319

JUMO GmbH & Co. KG
Lieferadresse:
Mackenrodtstraße 14,
36039 Fulda, Alemania
Postadresse:
36035 Fulda, Alemania
Telefon: +49 661 6003-0
Fax: +49 661 6003-607
E-Mail: mail@jumo.net
Internet: www.jumo.net

JUMO HUNGÁRIA KFT.
Számadó utca 19
1118 Budapest, Hungária
Telefon: +36 14670835
Fax: +36 14670840
E-mail: info.hu@jumo.net
Internet: www.jumo.hu

Típus	Szabályozási és határérték tartomány °C	Kapcsolási különbség %	Folyamatcsatlakozás becsavarozható hüvely	Merülőcső-Ø × hossz mm	Alkatrészszám.
ATHs-2	50–300	3–4	„30” G 1/2"	8 × 150 CrNi	60001556
ATHs-2	50–500	5	„30” G 1/2"	8 × 200 CrNi	60003322

Biztonsági hőmérsékletőrök (STW [STB]), Típus 603021/20-1-...

Típus	Szabályozási és határérték tartomány °C	Kapcsolási különbség %	Folyamatcsatlakozás becsavarozható hüvely/ hegesztett hüvely	Merülőcső-Ø × hossz mm	Alkatrészszám.
ATHs-20	20–150	4–6	„20” G 1/2"	8 × 150	60001478
ATHs-20	50–300	5	„30” G 1/2"	8 × 200 CrNi	60003323
ATHs-20	50–300	5	„31” G 1/2"	8 × 300 CrNi	60002585
ATHs-20	50–350	4–6	„46” G 3/4"[a]	170 acél, kúpos	60002217
ATHs-20	20–500	7	„21” G 1/2"	8 × 200	60003324

[a] Hegesztett hüvely

Biztonsági hőmérséklethatároló (STB), Típus 603021/70-1-...

Típus	Szabályozási és határérték tartomány °C	Kapcsolási különbség %	Folyamatcsatlakozás becsavarozható hüvely	Merülőcső-Ø × hossz mm	Alkatrészszám.
ATHs-70	30–110	–	„20” G 1/2"	8 × 200	60001043
ATHs-70	30–110	–	„20” G 1/2"	8 × 300	60000189
ATHs-70	60–130	–	„20” G 1/2"	8 × 150	60001044
ATHs-70	60–130	–	„20” G 1/2"	8 × 200	60000190
ATHs-70	130–200	–	„30” G 1/2"	8 × 200 CrNi	60003325
ATHs-70	50–300	–	„30” G 1/2"	8 × 200 CrNi	60003327
ATHs-70/U	30–110	–	„20” G 1/2"	8 × 150	60001524
ATHs-70/U	20–150	–	„20” G 1/2"	8 × 200	60001522
ATHs-70/U	20–150	–	„20” G 1/2"	8 × 200 CrNi	00479064
ATHs-70/U	50–300	–	„30” G 1/2"	8 × 200 CrNi	60003328
ATHs-70/U	50–350	–	„46” G 3/4"[a]	170 acél, kúpos	60002218
ATHs-70/U	20–500	–	„31” G 1/2"	8 × 200 CrNi	60003329
ATHs-70/U	20–500	–	„30” G 1/2"	8 × 200 CrNi	60001476

[a] Hegesztett hüvely

JUMO GmbH & Co. KG
Delivery address: Mackenrodtstraße 14
36039 Fulda, Germany
Postal address: 36035 Fulda, Germany
Phone: +49 661 6003-0
Fax: +49 661 6003-607
Email: mail@jumo.net
Internet: www.jumo.net

JUMO Instrument Co. Ltd.
JUMO House
Temple Bank, Riverway
Harlow, Essex, CM20 2DY, UK
Phone: +44 1279 63 55 33
Fax: +44 1279 62 50 29
Email: sales@jumo.co.uk
Internet: www.jumo.co.uk

JUMO Process Control, Inc.
6724 Joy Road
East Syracuse, NY 13057, USA
Phone: +1 315 437 5866
Fax: +1 315 437 5860
Email: info.us@jumo.net
Internet: www.jumousa.com

Surface-mounting double thermostat ATH

Particularities

- Self-monitoring (STB/STW [STB]) and Safety cut-out (STB/STW [STB]) in the event of a pressure drop
- Version according to DIN EN 14597 and to Pressure Equipment Directive 2014/68/EU
- Protection type IP54
- Measuring range -50[1] to +500 °C

ATHs-12 (Type 603026/0102-1-...)

Brief description

Thermostats are used to control and monitor thermal processes. ATH surface-mounting double thermostats consist of two separate measuring and switching systems.

The devices are available as temperature controllers TR, temperature monitors TW, safety temperature monitors STW (STB) and safety temperature limiters STB. In the event of a malfunction, the STB switches the monitored machine line to an operationally safe status.

Surface-mounting double thermostats operate according to the fluid expansion principle, a microswitch serves as an electrical switching element.

ATHf-170 (Type 603026/0170-2-...)

Switching function

Temperature controller TR and temperature monitor TW
If the temperature on the temperature probe exceeds the setpoint value, the electrical circuit is opened or closed by a microswitch. If the temperature falls below the selected setpoint value (by the switching differential), the microswitch is reset to its initial position..

Restart lock at safety temperature limiter STB
If the temperature at the temperature sensor exceeds the set limit value, the electrical circuit is opened and the microswitch is mechanically locked. After falling below the limit value by approx. 10 % of the temperature range (approx. 15 % of the limit value setting > +350 °C), the switch can be unlocked manually.

Use of the safety temperature monitor STW (STB) as safety temperature limiter STB
In this case, the circuit following the thermostat must comply with DIN EN 14597 and VDE 0116.

Self-monitoring for safety temperature limiter STB and safety temperature monitor STW (STB)
If the measuring system is destroyed (i.e. if the expansion fluid escapes) the pressure in the membrane of the STB and STW (STB) drops and permanently opens the electrical circuit. Unlocking is then no longer possible. When the STW (STB) and STB sensors cools down to the negative temperature range, the circuit opens, but must be manually unlocked by the reclosing button when the temperature rises. The STW (STB) automatically restarts.

[1] upon request

Approvals and approval marks (see Technical Data)

JUMO GmbH & Co. KG
Delivery address: Mackenrodtstraße 14
36039 Fulda, Germany
Postal address: 36035 Fulda, Germany
Phone: +49 661 6003-0
Fax: +49 661 6003-607
Email: mail@jumo.net
Internet: www.jumo.net

JUMO Instrument Co. Ltd.
JUMO House
Temple Bank, Riverway
Harlow, Essex, CM20 2DY, UK
Phone: +44 1279 63 55 33
Fax: +44 1279 62 50 29
Email: sales@jumo.co.uk
Internet: www.jumo.co.uk

JUMO Process Control, Inc.
6724 Joy Road
East Syracuse, NY 13057, USA
Phone: +1 315 437 5866
Fax: +1 315 437 5860
Email: info.us@jumo.net
Internet: www.jumousa.com

Technical data

Control ranges and temperature probes

	Fluid-filled			
Switching function	Control/limit value ranges °C	Max. admissible probe temperature °C	Max. capillary length mm	Probe length, dimension "L" Probe Ø "d" = 6 mm[a] mm
TR, TW	-20 to +50	60	5,000	141
	-10 to +40	50		185
	0 to 50	60		185
	0 to 100	125		107
	20 to 90	115		138
	20 to 120	140		106
	20 to 150	175		88
	30 to 110	135		125
	50 to 200	230		101
	50 to 250	290		73
	50 to 300	345		63
	50 to 350	405		53
	60 to 130	150		135
STW (STB) and STB	20 to 150	175	5,000	77
	30 to 110	135		108
	50 to 250	290		64
	50 to 300	345		55
	60 to 130	150		116
	Gas-filled			
TR, TW	20 to 400	460	1,000	278
	20 to 500	575	2,000	148
	20 to 500	575	4,000	202
STW (STB) and STB	20 to 400	460	1,000	176
	20 to 500	575	2,000	127
	20 to 500	575	4,000	202

[a] Standard

Capillary and temperature probe

Type	Scale limit value	Capillary	Temperature probe
ATH.-..	up to 200 °C	Copper (Cu), Ø 1.5mm, material no. Cu-DHP	Copper (Cu), material no. Cu-DHP, hard soldered
	up to 350 °C	Copper (Cu), Ø 1.5mm material no. Cu-DHP	Stainless steel (CrNi), material no. 1.4571, hard soldered
	up to 500 °C	Stainless steel (CrNi), Ø 1.5mm	Stainless steel (CrNi), material no. 1.4571, welded
	up to 350 °C	Stainless steel (CrNi), Ø 1.5mm	Stainless steel (CrNi), material no. 1.4571, welded (extra cost)
Capillary length	1,000 mm, max. 5,000 mm as standard		
Minimum bending radius of capillary	5 mm		

JUMO GmbH & Co. KG
Delivery address: Mackenrodtstraße 14
36039 Fulda, Germany
Postal address: 36035 Fulda, Germany
Phone: +49 661 6003-0
Fax: +49 661 6003-607
Email: mail@jumo.net
Internet: www.jumo.net

JUMO Instrument Co. Ltd.
JUMO House
Temple Bank, Riverway
Harlow, Essex, CM20 2DY, UK
Phone: +44 1279 63 55 33
Fax: +44 1279 62 50 29
Email: sales@jumo.co.uk
Internet: www.jumo.co.uk

JUMO Process Control, Inc.
6724 Joy Road
East Syracuse, NY 13057, USA
Phone: +1 315 437 5866
Fax: +1 315 437 5860
Email: info.us@jumo.net
Internet: www.jumousa.com

Electrical data

Switching function	TR, TW, STW (STB) Microswitch with changeover contact	STB (-70) Microswitch with NC contact and restart lock	STB (-70/574) Microswitch with NC contact, restart lock and additional signal contact
Max. contact rating	AC 230 V +10 %, 10 (2)[a] A, cos φ = 1 (0.6)[a], DC 230 V +10 %, 0.25 A		
with switching differential 1.5 % and 2 %	AC 230 V +10 %, 6 (1.2)[a] A, cos φ = 1 (0.6)[a]	-	-
	Microswith with gold-plated contacts, extra code 702 (only with switching differential 3 %, 5 %, and 7 %), AC/DC 24 V, 0.1 A, contact resistance 2.5 to 10 mΩ		

Contact reliability	To ensure high switching reliability, we recommend a minimum load of:
with silver contacts	AC/DC = 24 V, 100 mA
with gold-plated contacts (extra code 702)	AC/DC = 10 V, 5 mA

[a] inductive load

Environmental influences

Switching difference in % of the control/limit value range	Rated value	Poss. actual value	Rated value	Poss. actual value	
	Fluid-filled		Gas-filled		
Switching function TR, TW	3	3 max. 4	5	4 max. 8	standard
	6	6 max. 8	9	8 max. 12	upon request
	1.5	1 max. 2	2	1.5 max. 2.5	extra cost
	Fluid-filled		Gas-filled		
Switching function STW (STB)	5	4 max. 6	7	5 max. 12	standard
	9	8 max. 11	9	8 max. 16	upon request
	2	1 max. 3	2	1.5 max. 3	extra cost
Switching point accuracy in % of the control/limit value range					
Switching function TR, TW	In the upper third of the scale ± 1.5 %, at scale beginning ± 6 %				
Switching function STB, STW (STB)	In the upper third of the scale +0/-5 %, at scale beginning +0/-10 %				

Ambient temperature influence	Based on the control/limit value range When the ambient temperature on the case deviates from the calibration ambient temperature 22 °C, a switch point offset occurs. Higher ambient temperatures = lower switching point Lower ambient temperature = higher switching point					
Surface-mounted double thermostat with scale limit value	< 200 °C		÷ 200 °C ≤ 350 °C		> 350 °C ≤ 500 °C	
Switching function	TR/TW	STB/STW (STB)	TR/TW	STB/STW (STB)	TR/TW	STB/STW (STB)
Influence on the switch head	0.08 %/K	0.17 %/K	0.06 %/K	0.13 %/K	0.14 %/K	0.12 %/K
Influence on the capillary per metre	0.047 %/K	0.054 %/K	0.09 %/K	0.11 %/K	0.04 %/K	0.03 %/K
Admissible storage temperature	-50 to +80 °C or up to max. permissible ambient temperature (see nameplate)					
Admissible ambient temperature during use	See nameplate					
Rated position	Ss per DIN 16257, NL 0 to NL 90 (different rated positions (NL) on request)					

JUMO GmbH & Co. KG
Delivery address: Mackenrodtstraße 14
36039 Fulda, Germany
Postal address: 36035 Fulda, Germany
Phone: +49 661 6003-0
Fax: +49 661 6003-607
Email: mail@jumo.net
Internet: www.jumo.net

JUMO Instrument Co. Ltd.
JUMO House
Temple Bank, Riverway
Harlow, Essex, CM20 2DY, UK
Phone: +44 1279 63 55 33
Fax: +44 1279 62 50 29
Email: sales@jumo.co.uk
Internet: www.jumo.co.uk

JUMO Process Control, Inc.
6724 Joy Road
East Syracuse, NY 13057, USA
Phone: +1 315 437 5866
Fax: +1 315 437 5860
Email: info.us@jumo.net
Internet: www.jumousa.com

Housing

Material	
Case lid	Polycarbonate, shock resistant, color: pepple gray RAL 7032; Extra code "701": aluminium die casting, painted, color: pepple gray RAL 7032
Case bottom section	Aluminum die casting, painted, color: anthracite-gray RAL 7015
Set point value setting	
Switching function TR	Switching point adjustable from the outside using the rotary knob
Switching function TW, TB, STB, STW (STB)	Switching point can be adjusted with a screwdriver once the case lid has been removed.
Protection type	IP54 according to DIN EN 60529
Cable inlet	Self-sealing grommet M20 × 1.5, sealing range 8 to 10 mm (standard)
Weight	Approx. 800 g
Switch head fastening Type ATHf with capillary	
Standard	Screw connection by means of counter nut M18 × 1 on the case stud, capillary outlet on the case stud
Extra code 248	Wall stands
Extra code 711	With 2 screws through the case bottom part, lateral capillary outlet on the case, lid and bottom part made of plastic
Extra code 746	Fastening flange made of steel sheet, capillary outlet on the case stud

Process connection

Type ATHs with rigid shaft	
Scale limit value up to 150 °C	Process connection 20: Screw-in sleeve with screw-in spigot G 1/2″, form A, as per DIN 3852/2
Scale limit value exceeding 150 °C	Process connection 30: Screw-in sleeve with screw-in spigot G 1/2″, form A, as per DIN 3852/2, and intermediate piece, to ensure that the max. admissible ambient temperature is not exceeded on the case
Type ATHf with capillary	Process connection 10: Plain cylindrical probe (standard) Process connection 20: Screw-in thermowell (upon request) Screw-in sleeve with screw-in spigot G 1/2″, form A, as per DIN 3852/2, and clamping piece with fixing screw to lock the probe
Material	
Process connection 20	
Up to 150 °C	CuZn (standard)
Exceeding 150 °C	CrNi
Process connection 30	
Exceeding 150 °C	CrNi (standard)
Fitting length	Standard lengths: 100, 120, 150, 200 or 300 mm (different lengths upon request)
Immersion tube Ø	D = 15 mm

⇨ For different process connections and thermowells refer to data sheet 606710.

JUMO GmbH & Co. KG
Delivery address: Mackenrodtstraße 14
36039 Fulda, Germany
Postal address: 36035 Fulda, Germany
Phone: +49 661 6003-0
Fax: +49 661 6003-607
Email: mail@jumo.net
Internet: www.jumo.net

JUMO Instrument Co. Ltd.
JUMO House
Temple Bank, Riverway
Harlow, Essex, CM20 2DY, UK
Phone: +44 1279 63 55 33
Fax: +44 1279 62 50 29
Email: sales@jumo.co.uk
Internet: www.jumo.co.uk

JUMO Process Control, Inc.
6724 Joy Road
East Syracuse, NY 13057, USA
Phone: +1 315 437 5866
Fax: +1 315 437 5860
Email: info.us@jumo.net
Internet: www.jumousa.com

Approvals and approval marks

DIN	
Testing agency	DIN CERTCO/TÜV Süd
Certificates/certification number	TR/TR896
Inspection basis	DIN EN 14597
Valid for	ATH.-11 (Type 603026/0101 [TR/TR])
DIN	
Testing agency	DIN CERTCO/TÜV Süd
Certificates/certification number	TR/TW897
Inspection basis	DIN EN 14597
Valid for	ATH.-12 (Type 603026/0102 [TR/TW])
DIN	
Testing agency	DIN CERTCO/TÜV Süd
Certificates/certification number	TW/TW901
Inspection basis	DIN EN 14597
Valid for	ATH.-22 (Type 603026/0202 [TW/TW])
DIN	
Testing agency	DIN CERTCO/TÜV Süd
Certificates/certification number	TR/STW(STB)899S
Inspection basis	DIN EN 14597
Valid for	ATH.-120 (Type 603026/0120 [TR/STW (STB)])
DIN	
Testing agency	DIN CERTCO/TÜV Süd
Certificates/certification number	TR/STB900
Inspection basis	DIN EN 14597
Valid for	ATH.-170 (Type 603026/0170 [TR/STB])
DIN	
Testing agency	DIN CERTCO/TÜV Süd
Certificates/certification number	TW/STW(STB)903S
Inspection basis	DIN EN 14597
Valid for	ATH.-220 (Type 603026/0220 [TW/STW (STB)])
DIN	
Testing agency	DIN CERTCO/TÜV Süd
Certificates/certification number	TW/STB904
Inspection basis	DIN EN 14597
Valid for	ATH.-270 (Type 603026/0270 [TW/STB])
DIN	
Testing agency	DIN CERTCO/TÜV Süd
Certificates/certification number	2xSTW(STB)905S
Inspection basis	DIN EN 14597
Valid for	ATH.-2020 (Type 603026/2020 [STW (STB)/STW (STB)])
DIN	
Testing agency	DIN CERTCO/TÜV Süd
Certificates/certification number	STW(STB)/STB906S
Inspection basis	DIN EN 14597
Valid for	ATH.-2070 (Type 603026/2070 [STW (STB)/STB)])
DIN	
Testing agency	DIN CERTCO/TÜV Süd
Certificates/certification number	STB/STB907
Inspection basis	DIN EN 14597
Valid for	ATH.-7070 (Type 603026/7070 [STB/STB])

JUMO GmbH & Co. KG
Delivery address: Mackenrodtstraße 14
36039 Fulda, Germany
Postal address: 36035 Fulda, Germany
Phone: +49 661 6003-0
Fax: +49 661 6003-607
Email: mail@jumo.net
Internet: www.jumo.net

JUMO Instrument Co. Ltd.
JUMO House
Temple Bank, Riverway
Harlow, Essex, CM20 2DY, UK
Phone: +44 1279 63 55 33
Fax: +44 1279 62 50 29
Email: sales@jumo.co.uk
Internet: www.jumo.co.uk

JUMO Process Control, Inc.
6724 Joy Road
East Syracuse, NY 13057, USA
Phone: +1 315 437 5866
Fax: +1 315 437 5860
Email: info.us@jumo.net
Internet: www.jumousa.com

DGRL	
Testing agency	TÜV Süd
Certificates/certification number	Z-IS-TAF-MUC-17-11-2652099-021
Inspection basis	2014/68/EU, DIN EN 14597
Valid for	ATH.-120 (Type 603026/0120 [TR/STW (STB)]), ATH.-170 (Type 603026/0170 [TR/STB]), ATH.-220 (Type 603026/0220 [TW/STW (STB)]), ATH.-270 (Type 603026/0270 [TW/STB]), ATH.-2020 (Type 603026/2020 [STW (STB)/STW (STB)]), ATH.-2070 (Type 603026/2070 [STW (STB)/STB]), ATH.-7070 (Type 603026/7070 [STB/STB])
EAC[a]	
Testing agency	GOST Norm AG
Certificates/certification number	0198420
Inspection basis	TR ZU 004/2011 (LVD)
Valid for	ATH (Type 603026)

[a] Russian documentation upon request

JUMO GmbH & Co. KG
Delivery address: Mackenrodtstraße 14
36039 Fulda, Germany
Postal address: 36035 Fulda, Germany
Phone: +49 661 6003-0
Fax: +49 661 6003-607
Email: mail@jumo.net
Internet: www.jumo.net

JUMO Instrument Co. Ltd.
JUMO House
Temple Bank, Riverway
Harlow, Essex, CM20 2DY, UK
Phone: +44 1279 63 55 33
Fax: +44 1279 62 50 29
Email: sales@jumo.co.uk
Internet: www.jumo.co.uk

JUMO Process Control, Inc.
6724 Joy Road
East Syracuse, NY 13057, USA
Phone: +1 315 437 5866
Fax: +1 315 437 5860
Email: info.us@jumo.net
Internet: www.jumousa.com

Dimensions

Versions with rigid shaft

Process connection 20: Screw-in thermowell

ATHs-11 (Type 603026/0101)

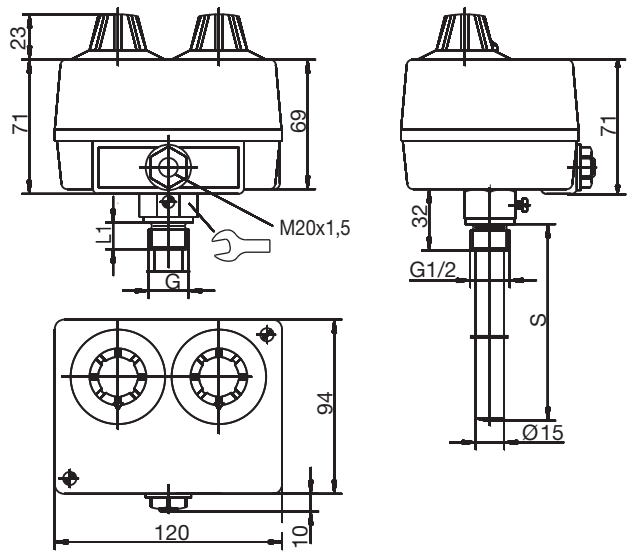

ATHs-12 (Type 603026/0102),
ATHs-120 (Type 603026/0120)

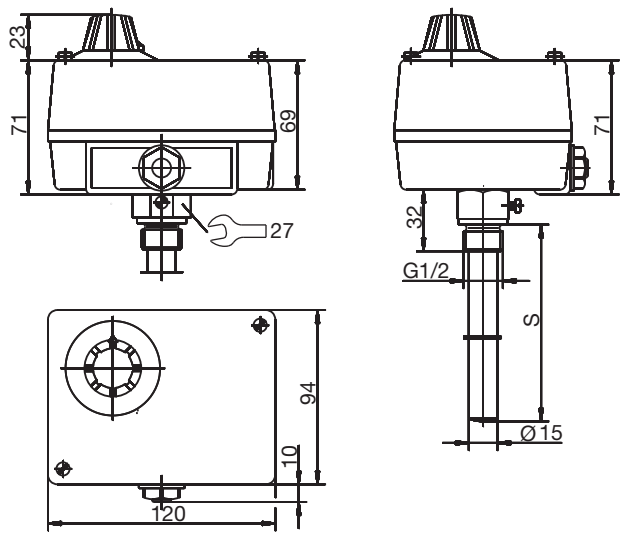

ATHs-22 (Type 603026/0202),
ATHs-2020 (Type 603026/2020)

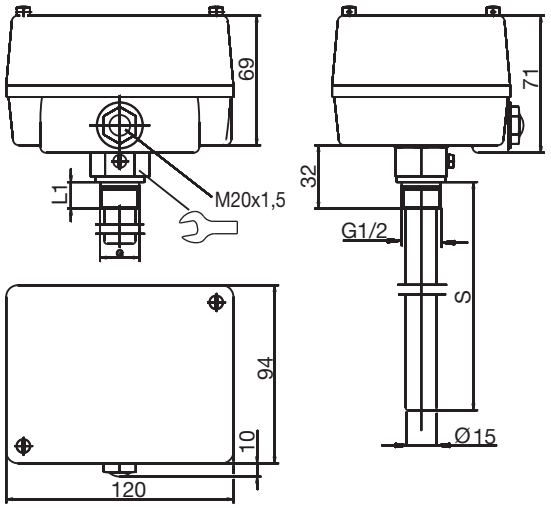

ATHs-170 (Type 603026/0170),
ATHS-170-.../574 (Type 603026/0170-.../574)

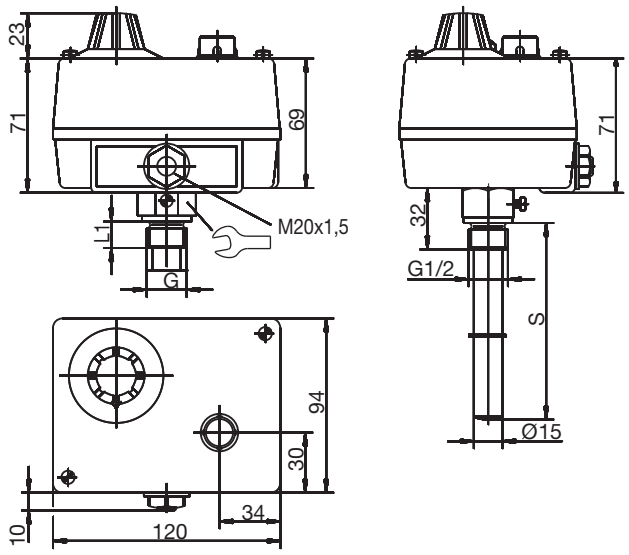

JUMO GmbH & Co. KG
Delivery address: Mackenrodtstraße 14
36039 Fulda, Germany
Postal address: 36035 Fulda, Germany
Phone: +49 661 6003-0
Fax: +49 661 6003-607
Email: mail@jumo.net
Internet: www.jumo.net

JUMO Instrument Co. Ltd.
JUMO House
Temple Bank, Riverway
Harlow, Essex, CM20 2DY, UK
Phone: +44 1279 63 55 33
Fax: +44 1279 62 50 29
Email: sales@jumo.co.uk
Internet: www.jumo.co.uk

JUMO Process Control, Inc.
6724 Joy Road
East Syracuse, NY 13057, USA
Phone: +1 315 437 5866
Fax: +1 315 437 5860
Email: info.us@jumo.net
Internet: www.jumousa.com

ATHs-270 (Type 603026/0270), ATHs-270-.../574 (Type 603026/0270-.../574), ATHs-2070 (Type 603026/2070), ATHs-2070-.../574 (Type 603026/2070-...-574)	ATHs-7070 (Type 603026/7070), ATHs-7070-.../574 (Type 603026/7070-.../574)
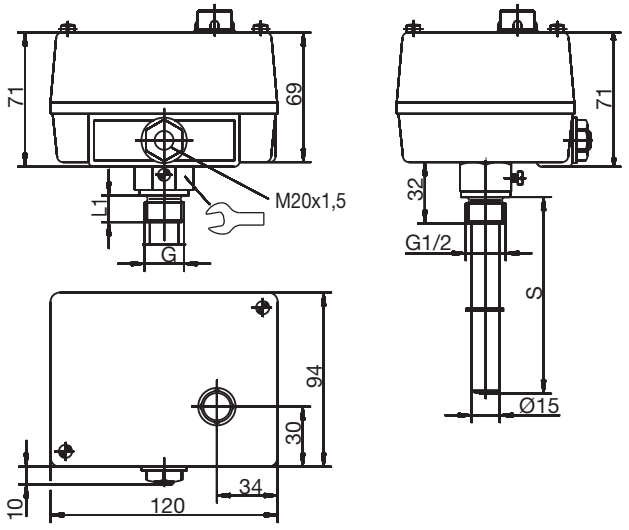	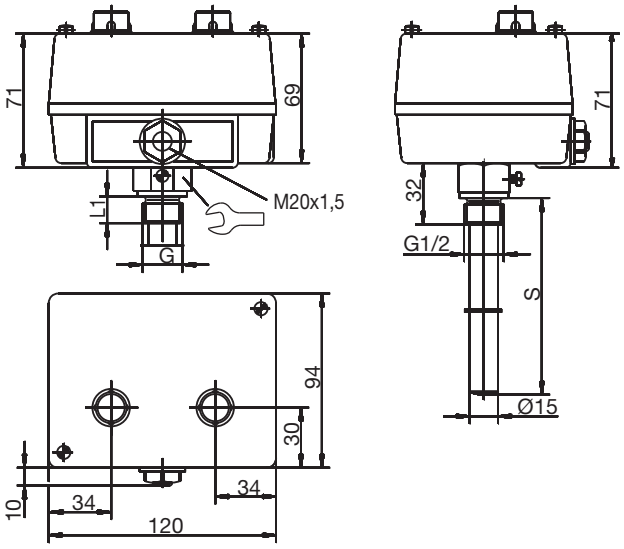

Process connection 30: Screw-in thermowell with intermediate piece (from 150 °C)

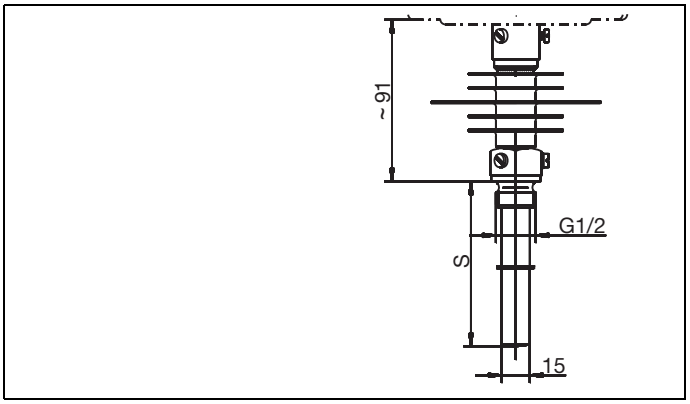

JUMO GmbH & Co. KG
Delivery address: Mackenrodtstraße 14
36039 Fulda, Germany
Postal address: 36035 Fulda, Germany
Phone: +49 661 6003-0
Fax: +49 661 6003-607
Email: mail@jumo.net
Internet: www.jumo.net

JUMO Instrument Co. Ltd.
JUMO House
Temple Bank, Riverway
Harlow, Essex, CM20 2DY, UK
Phone: +44 1279 63 55 33
Fax: +44 1279 62 50 29
Email: sales@jumo.co.uk
Internet: www.jumo.co.uk

JUMO Process Control, Inc.
6724 Joy Road
East Syracuse, NY 13057, USA
Phone: +1 315 437 5866
Fax: +1 315 437 5860
Email: info.us@jumo.net
Internet: www.jumousa.com

Versions with capillary

Process connection 10: Plain cylindrical probe

ATHf-11 (Type 603026/0101)

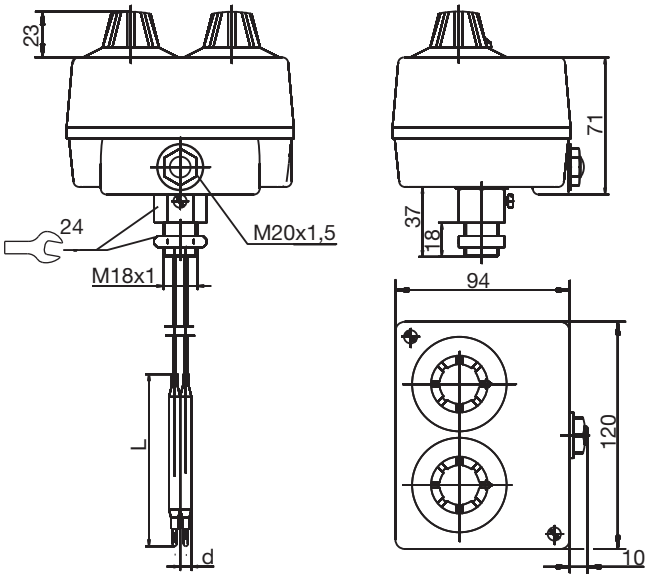

ATHf-12 (Type 603026/0102),
ATHf-120 (Type 603026/0120)

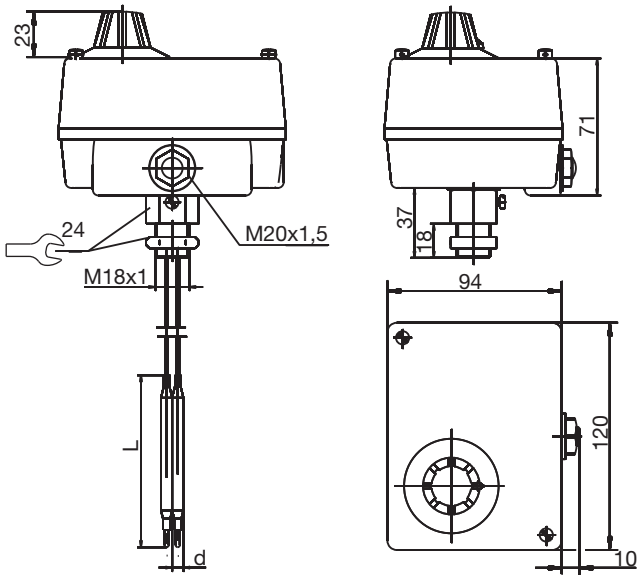

ATHf-22 (Type 603026/0202),
ATHf-2020 (Type 603026/2020)

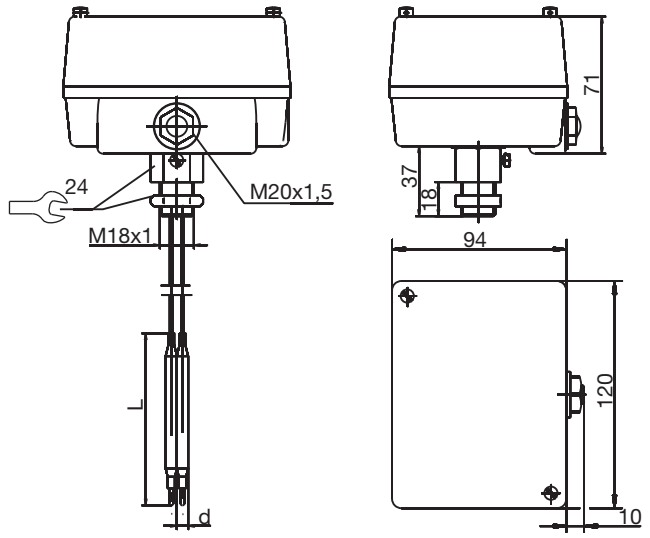

ATHf-170 (Type 603026/0170),
ATHf-170-.../574 (Type 603026/0170-.../574)

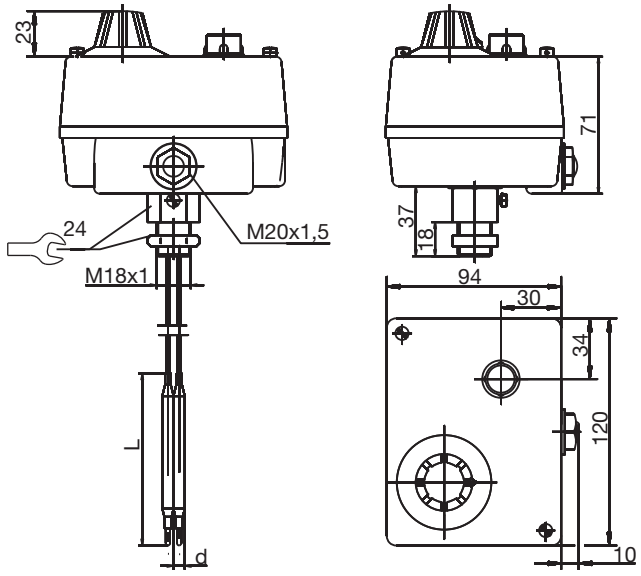

JUMO GmbH & Co. KG
Delivery address: Mackenrodtstraße 14
36039 Fulda, Germany
Postal address: 36035 Fulda, Germany
Phone: +49 661 6003-0
Fax: +49 661 6003-607
Email: mail@jumo.net
Internet: www.jumo.net

JUMO Instrument Co. Ltd.
JUMO House
Temple Bank, Riverway
Harlow, Essex, CM20 2DY, UK
Phone: +44 1279 63 55 33
Fax: +44 1279 62 50 29
Email: sales@jumo.co.uk
Internet: www.jumo.co.uk

JUMO Process Control, Inc.
6724 Joy Road
East Syracuse, NY 13057, USA
Phone: +1 315 437 5866
Fax: +1 315 437 5860
Email: info.us@jumo.net
Internet: www.jumousa.com

ATHf-270 (Type 603026/0270), ATHf-270-.../574 (Type 603026/0270-.../574), ATHf-2070 (Type 603026/2070), ATHf-2070-.../574 (Type 603026/2070-.../574)	ATHf-7070 (Type 603026/7070), ATHf-7070-.../574 (Type 603026/7070-.../574)
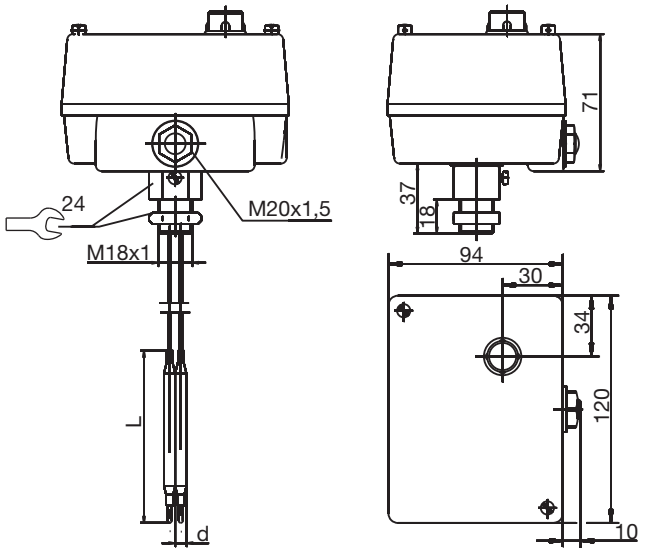	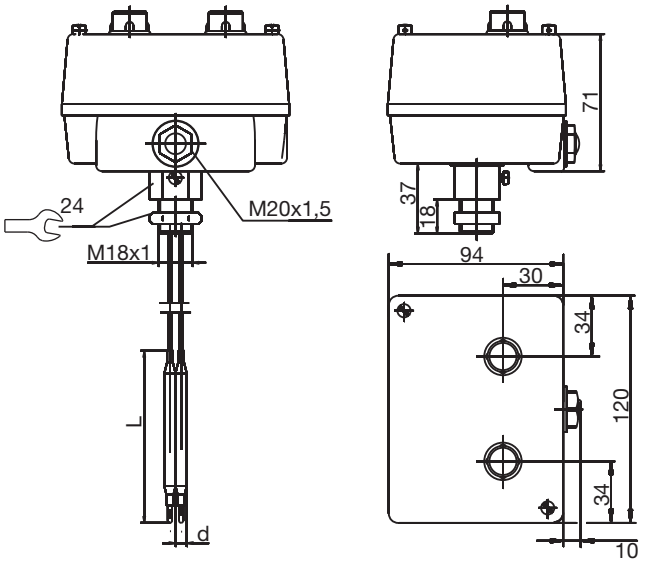

JUMO GmbH & Co. KG
Delivery address: Mackenrodtstraße 14
36039 Fulda, Germany
Postal address: 36035 Fulda, Germany
Phone: +49 661 6003-0
Fax: +49 661 6003-607
Email: mail@jumo.net
Internet: www.jumo.net

JUMO Instrument Co. Ltd.
JUMO House
Temple Bank, Riverway
Harlow, Essex, CM20 2DY, UK
Phone: +44 1279 63 55 33
Fax: +44 1279 62 50 29
Email: sales@jumo.co.uk
Internet: www.jumo.co.uk

JUMO Process Control, Inc.
6724 Joy Road
East Syracuse, NY 13057, USA
Phone: +1 315 437 5866
Fax: +1 315 437 5860
Email: info.us@jumo.net
Internet: www.jumousa.com

Connection diagram

The connection elements in the data sheet provide information on product selection.

For the electrical connection, only use the installation instructions or the operating manual.

Type	System	Switching function	
Type 603026/0101 (ATH-11), Type 603026/0102 (ATH-12), Type 603026/0120 (ATH-120), Type 603026/0202 (ATH-22), Type 603026/0220 (ATH-220), Type 603026/2020 (ATH-2020)	System I and System II: with changeover contact	TR, TW, STW (STB)	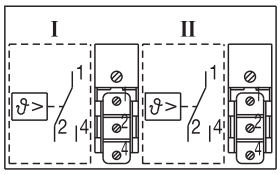
Type 603026/7070 (ATH-7070)	System I and System II: with NC contact and restart lock	STB	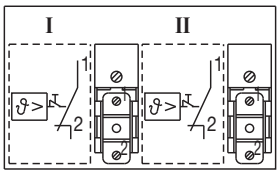
Type 603026/0170-.../574 (ATH-170/574), Type 603026/0270-.../574 (ATH-270/574), Type 603026/2070-.../574 (ATH-2070/574)	System I: with changeover contact	TR, TW, STW (STB)	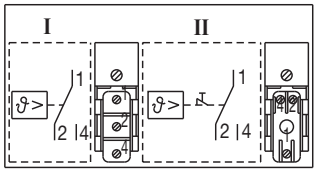
	System II: with NC contact, restart lock and additional signal contact		
Type 603026/7070-.../574 (ATH-7070/574)	System I and System II: with NC contact, restart lock and additional signal contact	STB	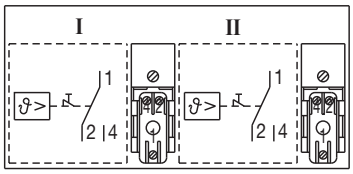
Type 603026/0170 (ATH-170), Type 603026/0270 (ATH-270), Type 603026/2070 (ATH-2070)	System I: with changeover contact	TR, TW, STW (STB)	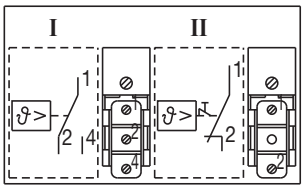
	System II: with NC contact and restart lock	STB	

JUMO GmbH & Co. KG
Delivery address: Mackenrodtstraße 14
36039 Fulda, Germany
Postal address: 36035 Fulda, Germany
Phone: +49 661 6003-0
Fax: +49 661 6003-607
Email: mail@jumo.net
Internet: www.jumo.net

JUMO Instrument Co. Ltd.
JUMO House
Temple Bank, Riverway
Harlow, Essex, CM20 2DY, UK
Phone: +44 1279 63 55 33
Fax: +44 1279 62 50 29
Email: sales@jumo.co.uk
Internet: www.jumo.co.uk

JUMO Process Control, Inc.
6724 Joy Road
East Syracuse, NY 13057, USA
Phone: +1 315 437 5866
Fax: +1 315 437 5860
Email: info.us@jumo.net
Internet: www.jumousa.com

Order details

	(1)	**Basic type**	
603026		Surface-mounting double thermostat ATH	
	(2)	**Basic type extension**	
0101		ATH.-11	Temperature controller/temperature controller (TR/TR)
0102		ATH.-12	Temperature controller/temperature monitor (TR/TW)
0120		ATH.-120	Temperature controller/safety temperature monitor (TR/STW (STB))
0170		ATH.-170	Temperature controller/safety temperature controller (TR/STB)
0202		ATH.-22	Temperature monitor/temperature monitor (TW/TW)
0220		ATH.-220	Temperature monitor/safety temperature monitor (TW/STW (STB))
0270		ATH.-270	Temperature monitor/safety temperature limiter (TW/STB)
2020		ATH.-2020	Safety temperature monitor/safety temperature monitor (STW (STB)/STW (STB))
2070		ATH.-2070	Safety temperature monitor/safety temperature limiter (STW (STB)/STB)
7070		ATH.-7070	Safety temperature limiter/safety temperature limiter (STB/STB)
	(3)	**Design**	
1		Rigid shaft	
2		Capillary	
	(4)	**Control range**	
014		-20 to +50 °C	
016		-10 to +40 °C	
021		0 to 50 °C	
025		0 to 100 °C	
041		20 to 90 °C	
042		20 to 120 °C	
043		20 to 150 °C	
045		20 to 400 °C	
046		20 to 500 °C	
052		30 to 110 °C	
062		50 to 200 °C	
063		50 to 250 °C	
064		50 to 300 °C	
066		60 to 130 °C	
	(5)	**Limit value range (STB)**	
014		-20 to +50 °C	
016		-10 to +40 °C	
021		0 to 50 °C	
025		0 to 100 °C	
041		20 to 90 °C	
042		20 to 120 °C	
043		20 to 150 °C	
045		20 to 400 °C	
046		20 to 500 °C	
052		30 to 110 °C	
062		50 to 200 °C	
063		50 to 250 °C	
064		50 to 300 °C	
066		60 to 130 °C	

JUMO GmbH & Co. KG
Delivery address: Mackenrodtstraße 14
36039 Fulda, Germany
Postal address: 36035 Fulda, Germany
Phone: +49 661 6003-0
Fax: +49 661 6003-607
Email: mail@jumo.net
Internet: www.jumo.net

JUMO Instrument Co. Ltd.
JUMO House
Temple Bank, Riverway
Harlow, Essex, CM20 2DY, UK
Phone: +44 1279 63 55 33
Fax: +44 1279 62 50 29
Email: sales@jumo.co.uk
Internet: www.jumo.co.uk

JUMO Process Control, Inc.
6724 Joy Road
East Syracuse, NY 13057, USA
Phone: +1 315 437 5866
Fax: +1 315 437 5860
Email: info.us@jumo.net
Internet: www.jumousa.com

	(6)	**Switching differential 1**
00		None
15		1.5 %
20		2 %
30		3 %
50		5 %
60		6 %
70		7 %
90		9 %
	(7)	**Switching differential 2**
00		None
15		1.5 %
20		2 %
30		3 %
50		5 %
60		6 %
70		7 %
90		9 %
	(8)	**Capillary length 1**
0		None
1000		1000 mm
2000		2000 mm
3000		3000 mm
4000		4000 mm
5000		5000 mm
	(9)	**Capillary length 2**
0		None
1000		1000 mm
2000		2000 mm
3000		3000 mm
4000		4000 mm
5000		5000 mm
	(10)	**Capillary material 1**
00		None
20		CrNi (stainless steel)
40		Cu (copper)
	(11)	**Capillary material 2**
00		None
20		CrNi (stainless steel)
40		Cu (copper)
	(12)	**Process connection**
10		Plain cylindrical probe 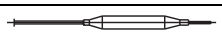
20		Screw-in thermowell 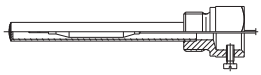
30		Screw-in thermowell with intermediate piece 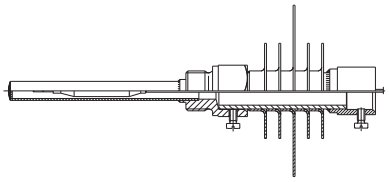

JUMO GmbH & Co. KG
Delivery address: Mackenrodtstraße 14
36039 Fulda, Germany
Postal address: 36035 Fulda, Germany
Phone: +49 661 6003-0
Fax: +49 661 6003-607
Email: mail@jumo.net
Internet: www.jumo.net

JUMO Instrument Co. Ltd.
JUMO House
Temple Bank, Riverway
Harlow, Essex, CM20 2DY, UK
Phone: +44 1279 63 55 33
Fax: +44 1279 62 50 29
Email: sales@jumo.co.uk
Internet: www.jumo.co.uk

JUMO Process Control, Inc.
6724 Joy Road
East Syracuse, NY 13057, USA
Phone: +1 315 437 5866
Fax: +1 315 437 5860
Email: info.us@jumo.net
Internet: www.jumousa.com

	(13)	**Thread of process connection**
00		None
13		G 1/2″
	(14)	**Material of process connection**
00		None
20		CrNi (stainless steel)
46		CuZn (brass)
	(15)	**Insertion length**
000		Without thermowell (ATHf-...)
100		100 mm
120		120 mm
150		150 mm
200		200 mm
300		300 mm
	(16)	**Immersion tube diameter**
00		Without thermowell
15		15 mm
	(17)	**Probe diameter**
6		6 mm
	(18)	**Extra codes**
000		None
248		Wall stands
574		Microswitch with changeover contact, restart lock only for STB
701		Case lid made of aluminium die casting
702		Snap-action switch contact, gold-plated (only with switching differential 3 %, 5 %, and 7 %, and STB)
711		Switch head fastening with 2 screws through the case bottom part
764		Fastening flange made of steel sheet

	(1)		(2)		(3)		(4)		(5)		(6)		(7)		(8)		(9)		(10)	
Order code		/		-		-		-		-		-		-		-		-		-
Order example	603026	/	0101	-	1	-	014	-	14	-	00	-	15	-	0	-	1000	-	00	-

	(11)		(12)		(13)		(14)		(15)		(16)		(17)		(18)		
Order code		-		-		-		-		-		-		/		,	...[a]
Order example	20	-	10	-	13	-	00	-	100	-	00	-	6	/	248	,	

[a] List extra codes in sequence, separated by commas.

JUMO GmbH & Co. KG
Delivery address: Mackenrodtstraße 14
36039 Fulda, Germany
Postal address: 36035 Fulda, Germany
Phone: +49 661 6003-0
Fax: +49 661 6003-607
Email: mail@jumo.net
Internet: www.jumo.net

JUMO Instrument Co. Ltd.
JUMO House
Temple Bank, Riverway
Harlow, Essex, CM20 2DY, UK
Phone: +44 1279 63 55 33
Fax: +44 1279 62 50 29
Email: sales@jumo.co.uk
Internet: www.jumo.co.uk

JUMO Process Control, Inc.
6724 Joy Road
East Syracuse, NY 13057, USA
Phone: +1 315 437 5866
Fax: +1 315 437 5860
Email: info.us@jumo.net
Internet: www.jumousa.com

Stock versions

Versions with rigid shaft

Type	Control/ limit value range	Switching differential	Process connection	Immersion tube Ø × length mm	Part no.
ATHs-22	0 to 100 °C	3 to 4 %	"20" G 1/2″	15 × 120	60001047
ATHs-22	0 to 100 °C	1.5 %	"20" G 1/2″	15 × 120 CrNi	60001555
ATHs-22	0 to 100 °C	3 to 4 %	"20" G 1/2″	15 × 150	60000205
ATHs-22	0 to 100 °C	3 to 4 %	"20" G 1/2″	15 × 200	60000988
ATHs-22	0 to 100 °C	3 to 4 %	"20" G 1/2″	15 × 300	60000204
ATHs-22	20 to 150	3 to 4 %	"20" G 1/2″	15 × 100	60000489
ATHs-22	50 to 300	3 to 4 %	"30" G 1/2″	15 × 150 CrNi	60003331
ATHs-120	20 to 150	3 to 4 %	"20" G 1/2″	15 × 150	60001479
ATHs-120	20 to 120	3 to 4 %	"20" G 1/2″	15 × 150	60001932
ATHs-170	30 to 110	3 to 4 %	"20" G 1/2″	15 × 150	60000195
ATHs-170	30 to 110	3 to 4 %	"20" G 1/2″	15 × 200	60000196
ATHs-170	20 to 120	3 to 4 %	"20" G 1/2″	15 × 150	60001048
ATHs-170	20 to 150	3 to 4 %	"20" G 1/2″	15 × 150	60000989
ATHs-270	20 to 150	3 to 4 %	"20" G 1/2″	15 × 200	60000194

Versions with capillary

Type	Control/ limit value range	Switching differential	Capillary	Process connection	Probe Ø × length mm	Part no.
ATHf-22	0 to 100 °C	3 to 4 %	1000 mm	„10“ plain cylindrical probe	6 × 107	60001046
ATHf-170	30 to 110 °C	3 to 4 %	1000 mm	„10“ plain cylindrical probe	6 × 125	60001876

JUMO GmbH & Co. KG
Delivery address: Mackenrodtstraße 14
36039 Fulda, Germany
Postal address: 36035 Fulda, Germany
Phone: +49 661 6003-0
Fax: +49 661 6003-607
Email: mail@jumo.net
Internet: www.jumo.net

JUMO Instrument Co. Ltd.
JUMO House
Temple Bank, Riverway
Harlow, Essex, CM20 2DY, UK
Phone: +44 1279 63 55 33
Fax: +44 1279 62 50 29
Email: sales@jumo.co.uk
Internet: www.jumo.co.uk

JUMO Process Control, Inc.
6733 Myers Road
East Syracuse, NY 13057, USA
Phone: +1 315 437 5866
Fax: +1 315 437 5860
Email: info.us@jumo.net
Internet: www.jumousa.com

Surface-mounting thermostat ATH.-SE-..

to monitor seagoing vessel equipment

Special features

- Control and monitoring of thermal processes
- Temperature monitor TW
- Safety temperature monitor STW (STB)
- Safety temperature limiter STB

ATHs-SE-70

ATHf-SE-..

Brief description

Thermostats are used to control and monitor thermal processes. The devices of the ATH.-SE type series are available as temperature monitors TW, safety temperature monitors STW (STB) and safety temperature limiters STB. In the event of a malfunction, the STB switches the monitored machine line to an operational safe status.

Surface-mounting thermostats operate according to the fluid expansion principle, a microswitch is used as an electrical switching element.

Switching function

Temperature monitor TW and safety temperature monitor STW

If the temperature on the temperature probe exceeds the limit value, the electrical circuit is opened by a microswitch. When the limit value falls below the set limit value (by the switching differential), the switch is returned to its initial position.

Restart lock at safety temperature limiter STB

If the temperature at the temperature sensor exceeds the set limit value, the electrical circuit is opened and mechanically locked. After falling below the limit value by approx. 10 % of the temperature range, the switch can be unlocked manually.

Use of the safety temperature monitor STW as safety temperature limiter STB

In this case, the circuit following the thermostat must comply with DIN EN 14597 and VDE 0116.

Self-monitoring for safety temperature limiter STB and safety temperature monitor STW (STB)

If the measuring system is destroyed (i.e. if the expansion fluid escapes) the pressure in the membrane of the STB and STW (STB) drops and permanently opens the electrical circuit. Unlocking is then no longer possible. When the STB sensor cools down to the negative temperature range, the circuit opens, but must be manually unlocked by the reclosing button when the temperature rises. The STW (STB) automatically restarts.

Approvals and approval marks (see "Technical data")

JUMO GmbH & Co. KG
Delivery address: Mackenrodtstraße 14
36039 Fulda, Germany
Postal address: 36035 Fulda, Germany
Phone: +49 661 6003-0
Fax: +49 661 6003-607
Email: mail@jumo.net
Internet: www.jumo.net

JUMO Instrument Co. Ltd.
JUMO House
Temple Bank, Riverway
Harlow, Essex, CM20 2DY, UK
Phone: +44 1279 63 55 33
Fax: +44 1279 62 50 29
Email: sales@jumo.co.uk
Internet: www.jumo.co.uk

JUMO Process Control, Inc.
6733 Myers Road
East Syracuse, NY 13057, USA
Phone: +1 315 437 5866
Fax: +1 315 437 5860
Email: info.us@jumo.net
Internet: www.jumousa.com

Technical data

Control ranges and temperature probes

Type	Control/limit value ranges	max. admissible excessive probe temperature	Length of the temperature probe in mm			
			Copper (Cu)		Stainless steel (CrNi)	
	°C	°C	Ø 6	Ø 8	Ø 6	Ø 8
ATH.-SE-2	0 to 100	125	107	75	99	67
	20 to 90	125	138	91	130	83
	30 to 110	135	125	84	117	76
	20 to 120	140	107	75	99	67
	60 to 140	165	123	83	117	76
	20 to 150	175	88	65	80	57
	50 to 200	230	101	72	93	64
	50 to 250	290	-	-	73	54
	50 to 300	345	-	-	63	49
ATH.-SE-20 ATH.-SE-70	30 to 110	135	112	78	104	70
	60 to 140	165	110	77	102	68
	20 to 150	175	80	61	72	53
	50 to 250	290	-	-	66	50
	50 to 300	345	-	-	58	-

Capillary and temperature probe

Type	Scale limit value	Capillary	Temperature probe
ATH.-SE-2 ATH.-SE-20 ATH.-SE-70	≤ 200 °C	Copper (Cu) Ø 1.5 mm Material no. 2.0090	Copper (Cu) Material no. 2.0090 hard soldered
	> 200 °C	Copper (Cu) Ø 1.5 mm Material no. 2.0090	Stainless steel (CrNi) Material no. 1.4571 hard soldered
	all areas	Stainless steel (CrNi) Ø 1.5 mm	Stainless steel (CrNi) Material no. 1.4571 welded
Capillary length	1000 mm, max. 2000 mm as standard		
Min. bending radius of the capillary	5 mm		

JUMO GmbH & Co. KG
Delivery address: Mackenrodtstraße 14
36039 Fulda, Germany
Postal address: 36035 Fulda, Germany
Phone: +49 661 6003-0
Fax: +49 661 6003-607
Email: mail@jumo.net
Internet: www.jumo.net

JUMO Instrument Co. Ltd.
JUMO House
Temple Bank, Riverway
Harlow, Essex, CM20 2DY, UK
Phone: +44 1279 63 55 33
Fax: +44 1279 62 50 29
Email: sales@jumo.co.uk
Internet: www.jumo.co.uk

JUMO Process Control, Inc.
6733 Myers Road
East Syracuse, NY 13057, USA
Phone: +1 315 437 5866
Fax: +1 315 437 5860
Email: info.us@jumo.net
Internet: www.jumousa.com

Electrical data

Switching element	ATH.-SE-2 ATH.-SE-20	ATH.-SE-70	ATH-SE-70/574
	Microswitch with change-over contact	Microswitch with N/C contact and restart lock	Microswitch with N/C contact, restart lock and additional signal contact
Max. contact raiting	AC 230 V +10 %, 10 (2) A, cos φ = 1 (0.6) DC 230 V +10 %, 0.25 A		
With a hysteresis of 1.5 %	AC 230 V +10 %, 6 (1.2) A, cos φ = 1 (0.6)	-	-
Mode of operation TW: 2BL STW (STB): 2BKLNP STB: 2BFHKLNPV	According to DIN EN 60730-1, DIN EN 60730-2-9 and DIN EN 14597 Automatic mode of operation with micro shutdown during operation, as no auxiliary power source is required Automatic mode of operation with micro-disconnection in operation, with breakage safety device		

Mechanical features

Housing material Surface with impact resistant textured paint	Aluminium die cast with sealable screws Lid: RAL 7032 Bottom section: RAL 7015
Connection line Diameter Conductor cross section	 10 to 16.5 mm Max. 2.5 mm^2
Rated position (NL)	According to DIN 16257, NL 0 to NL 90 (other rated position upon request)
Operating medium	Water, oil, air, superheated steam
Installation position	Any (for outdoor installation upon request)
Weight ATHf-SE-.. ATHs-SE-..	 Approx. 700 g Approx. 650 g, with screw-in thermowell „20“ Approx. 850 g, with screw-in thermowell and adapter „30“

JUMO GmbH & Co. KG
Delivery address: Mackenrodtstraße 14
36039 Fulda, Germany
Postal address: 36035 Fulda, Germany
Phone: +49 661 6003-0
Fax: +49 661 6003-607
Email: mail@jumo.net
Internet: www.jumo.net

JUMO Instrument Co. Ltd.
JUMO House
Temple Bank, Riverway
Harlow, Essex, CM20 2DY, UK
Phone: +44 1279 63 55 33
Fax: +44 1279 62 50 29
Email: sales@jumo.co.uk
Internet: www.jumo.co.uk

JUMO Process Control, Inc.
6733 Myers Road
East Syracuse, NY 13057, USA
Phone: +1 315 437 5866
Fax: +1 315 437 5860
Email: info.us@jumo.net
Internet: www.jumousa.com

Environmental influences

Hysteresis in % of the control/limit value range (only for type 2 and 20)	Reted value	Possible process value		Designation
	3	3 to 4		S1
	6	6 to 8		S2
	1.5	1 to 2		S3
Switching point accuracy	Of the control/limit value at T_U 22 °C			
TW	In the upper third of the scale ±1.5 %, at the beginning of the scale ±6 %,			
STB, STW (STB)	in the upper third of the scale +0/-5 %, at the beginning of the scale +0/-10 %			
Setpoint value adjustment	Switching point adjustable with screwdriver after removing housing cover.			
Ambient temperature influence	Referring to the control/limit value range			
	If the ambient temperature at the switching head and/or the capillary deviates from the calibration ambient temperature 22 °C, a switching point shift occurs.			
	Higher ambient temperatures		= lower switching point	
	Lower ambient temperatures		= higher switching point	
For devices with scale limit value	< 200 °C		≥ 200 °C	
	ATH.-SE-2	ATH.-SE-20 ATH.-SE-70	ATH.-SE-2	ATH.-SE-20 ATH.-SE-70
On switching head	0.08 %/K	0.17 %/K	0.06 %/K	0.13 %/K
On capillary per m	0.047 %/K	0.054 %/K	0.09 %/K	0.11 %/K
Admissible ambient temperature				
Capillary, switching head	Max. 80 °C			
	Min. -40 °C at the end of the scale < 200 °C			
	Min. -20 °C at the end of the scale ≥ 200 °C ≤ 300 °C			
Admissible storage temperature	-50 to +50 °C			
Permissible overtemperature safety	Max. scale end value +15 % on the probe during use			
Time constant $t_{0,632}$				
In water	≤ 45 s			
In oil	≤ 60 s			
In air, superheated steam	≤ 120 s			
Protection type	IP54, according to EN 60529			

JUMO GmbH & Co. KG
Delivery address: Mackenrodtstraße 14
36039 Fulda, Germany
Postal address: 36035 Fulda, Germany
Phone: +49 661 6003-0
Fax: +49 661 6003-607
Email: mail@jumo.net
Internet: www.jumo.net

JUMO Instrument Co. Ltd.
JUMO House
Temple Bank, Riverway
Harlow, Essex, CM20 2DY, UK
Phone: +44 1279 63 55 33
Fax: +44 1279 62 50 29
Email: sales@jumo.co.uk
Internet: www.jumo.co.uk

JUMO Process Control, Inc.
6733 Myers Road
East Syracuse, NY 13057, USA
Phone: +1 315 437 5866
Fax: +1 315 437 5860
Email: info.us@jumo.net
Internet: www.jumousa.com

Process connection

ATHs-SE-.. with rigid shaft	Sclae limit value **up to** 150 °C, thermowell „20“	Scale limit value **exceeding** 150 °C, thermowell „30“
	Screw-in sleeve with screw-in spigot G 1/2, form A according to DIN 3852/2	Screw-in sleeve with screw-in journal G 1/2, form A according to DIN 3852/2 and intermediate piece, to ensure that the max. admissible ambient temperatur of 80 °C is not exceeded on the housing.
Material	Up to 150 °C: CuZn as standard Over 150 °C: CrNi as standard	- Over 150 °C: CrNi as standard

ATHf-SE-.. with capilar	Plain cylindrical probe „10“ (standard) Screw-in thermowell „20“ (on request) Screw-in sleeve with screw-in spigot G 1/2, form A according to DIN 3852/2 and clamping piece with locking screw to lock the probe	
Material	Thermowell „20“ Up to 150 °C: CuZn as standard Over 150 °C: CrNi as standard	Thermowell „30“ - Over 150 °C: CrNi as standard
Fitting length S (max. 2000 mm)	Standard length: 100, 120, 150 mm (material CuZn, CrNi), with 200 mm only CuZn	
Immersion tube Ø	D = 8 mm, D = 10 mm	

Note

Physical and toxic features of the expansion means, which could occur in the event of a measuring system break.

Control range with scale limit value	Hazardous reactions	Fire and explosion hazard		Hazardous to waters	Information about toxicology		
		Ignition temperature	Explosion limit		Irritant	Dangerous to health	Toxic
< 200 °C	No	355 °C	0.6 to 8 V%	Yes	Yes	[a]	No
≥ 200 °C ≤ 300 °C	No	490 °C	-	Yes	Yes	[a]	No

[a] There is currently no statement by the health authority concerning hazards to health in the event of short-term exposure and low concentration, e.g. measuring system break.

JUMO GmbH & Co. KG
Delivery address: Mackenrodtstraße 14
36039 Fulda, Germany
Postal address: 36035 Fulda, Germany
Phone: +49 661 6003-0
Fax: +49 661 6003-607
Email: mail@jumo.net
Internet: www.jumo.net

JUMO Instrument Co. Ltd.
JUMO House
Temple Bank, Riverway
Harlow, Essex, CM20 2DY, UK
Phone: +44 1279 63 55 33
Fax: +44 1279 62 50 29
Email: sales@jumo.co.uk
Internet: www.jumo.co.uk

JUMO Process Control, Inc.
6733 Myers Road
East Syracuse, NY 13057, USA
Phone: +1 315 437 5866
Fax: +1 315 437 5860
Email: info.us@jumo.net
Internet: www.jumousa.com

Approvals and approval marks

Bureau Veritas	
Testing agency	Marine Division/Frankreich
Certificates/certification numbers	04567/H0 BV
Inspection basis	BV Rules for the Classification of Steel Ships
Valid for	Type ATH.-SE-2, Type ATH.-SE-20, Type ATH.-SE-70
DGRL	
Testing agency	TÜV Süd
Certificates/certification numbers	Z-IS-TAF-MUC-17-11-2652099-021
Inspection basis	2014/68/EU, DIN EN 14597
Valid for	Type ATH.-SE-20, Type ATH.-SE-70
DIN	
Testing agency	DIN CERTCO/TÜV Süd
Certificates/certification numbers	TW892
Inspection basis	DIN EN 14597
Valid for	Type ATH.-SE-2
DIN	
Testing agency	DIN CERTCO/TÜV Süd
Certificates/certification numbers	STW(STB)894S
Inspection basis	DIN EN 14597
Valid for	Type ATH.-SE-20
DIN	
Testing agency	DIN CERTCO/TÜV Süd
Certificates/certification numbers	STB895
Inspection basis	DIN EN 14597
Valid for	Type ATH.-SE-70
DNV GL	
Testing agency	DNV GL Hamburg
Certificates/certification numbers	TAA000010T
Inspection basis	Class Guideline DNVGL-CG-0339
Valid for	Type ATH.-SE-2, Type ATH.-SE-20, Type ATH.-SE-70
EAC[a]	
Testing agency	GOST NORM AG
Certificates/certification numbers	0198420
Inspection basis	TR ZU 004/2011 (LVD)
Valid for	Type ATH.-SE-..
RMRS	
Testing agency	Russian Maritime Register of Shipping (RS)
Certificates/certification numbers	19.40050.250
Inspection basis	-
Valid for	Type ATH.-SE-..

[a] Russian documentation upon request

JUMO GmbH & Co. KG
Delivery address: Mackenrodtstraße 14
36039 Fulda, Germany
Postal address: 36035 Fulda, Germany
Phone: +49 661 6003-0
Fax: +49 661 6003-607
Email: mail@jumo.net
Internet: www.jumo.net

JUMO Instrument Co. Ltd.
JUMO House
Temple Bank, Riverway
Harlow, Essex, CM20 2DY, UK
Phone: +44 1279 63 55 33
Fax: +44 1279 62 50 29
Email: sales@jumo.co.uk
Internet: www.jumo.co.uk

JUMO Process Control, Inc.
6733 Myers Road
East Syracuse, NY 13057, USA
Phone: +1 315 437 5866
Fax: +1 315 437 5860
Email: info.us@jumo.net
Internet: www.jumousa.com

Dimensions

ATHs-SE-2 (20)
with screw-in thermowell „20“, up to 150 °C

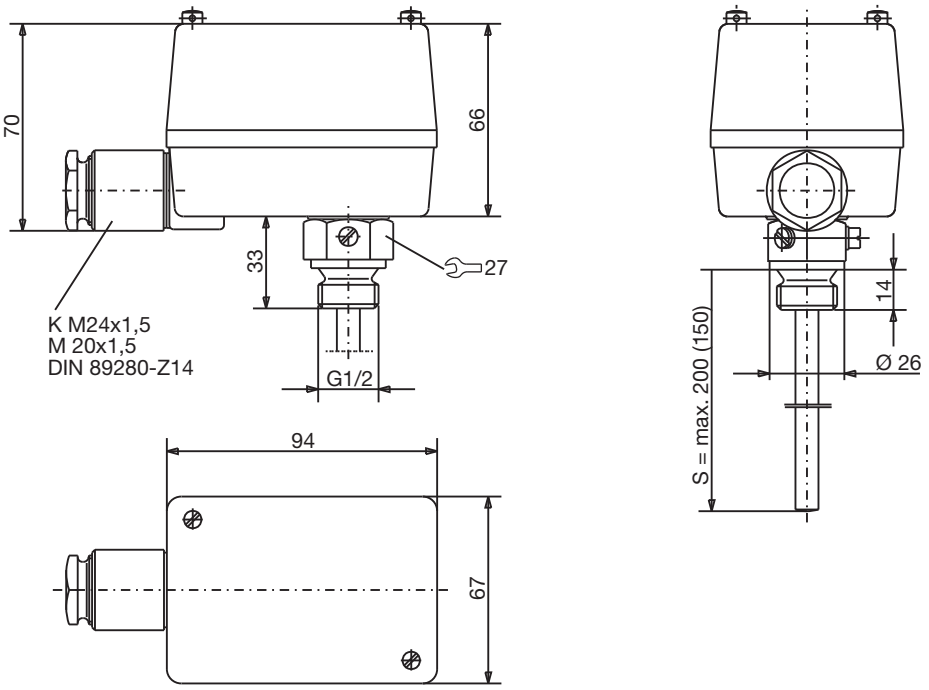

JUMO GmbH & Co. KG
Delivery address: Mackenrodtstraße 14
36039 Fulda, Germany
Postal address: 36035 Fulda, Germany
Phone: +49 661 6003-0
Fax: +49 661 6003-607
Email: mail@jumo.net
Internet: www.jumo.net

JUMO Instrument Co. Ltd.
JUMO House
Temple Bank, Riverway
Harlow, Essex, CM20 2DY, UK
Phone: +44 1279 63 55 33
Fax: +44 1279 62 50 29
Email: sales@jumo.co.uk
Internet: www.jumo.co.uk

JUMO Process Control, Inc.
6733 Myers Road
East Syracuse, NY 13057, USA
Phone: +1 315 437 5866
Fax: +1 315 437 5860
Email: info.us@jumo.net
Internet: www.jumousa.com

ATHs-SE-70

with screw-in thermowell and intermediate piece „30“, 150 to 300 °C

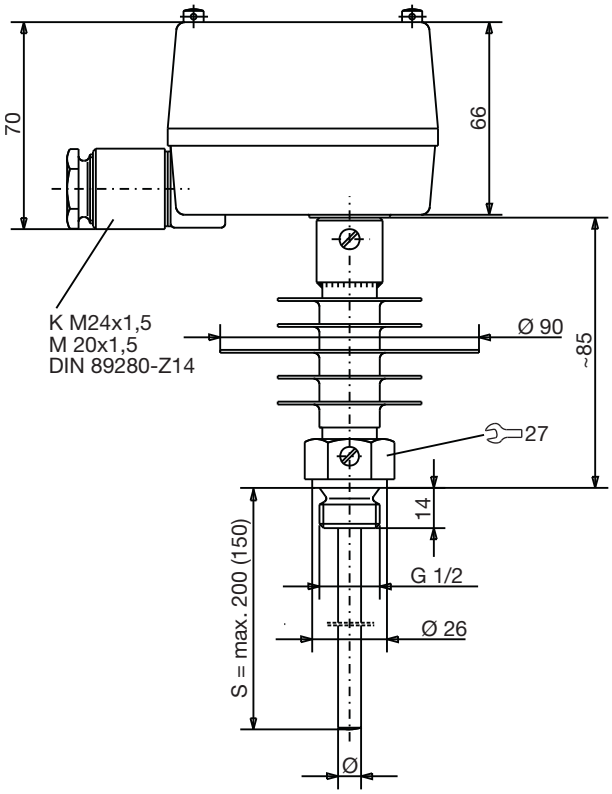

JUMO GmbH & Co. KG
Delivery address: Mackenrodtstraße 14
36039 Fulda, Germany
Postal address: 36035 Fulda, Germany
Phone: +49 661 6003-0
Fax: +49 661 6003-607
Email: mail@jumo.net
Internet: www.jumo.net

JUMO Instrument Co. Ltd.
JUMO House
Temple Bank, Riverway
Harlow, Essex, CM20 2DY, UK
Phone: +44 1279 63 55 33
Fax: +44 1279 62 50 29
Email: sales@jumo.co.uk
Internet: www.jumo.co.uk

JUMO Process Control, Inc.
6733 Myers Road
East Syracuse, NY 13057, USA
Phone: +1 315 437 5866
Fax: +1 315 437 5860
Email: info.us@jumo.net
Internet: www.jumousa.com

ATHs-SE-70

with screw-in thermowell „20“, up to 300 °C

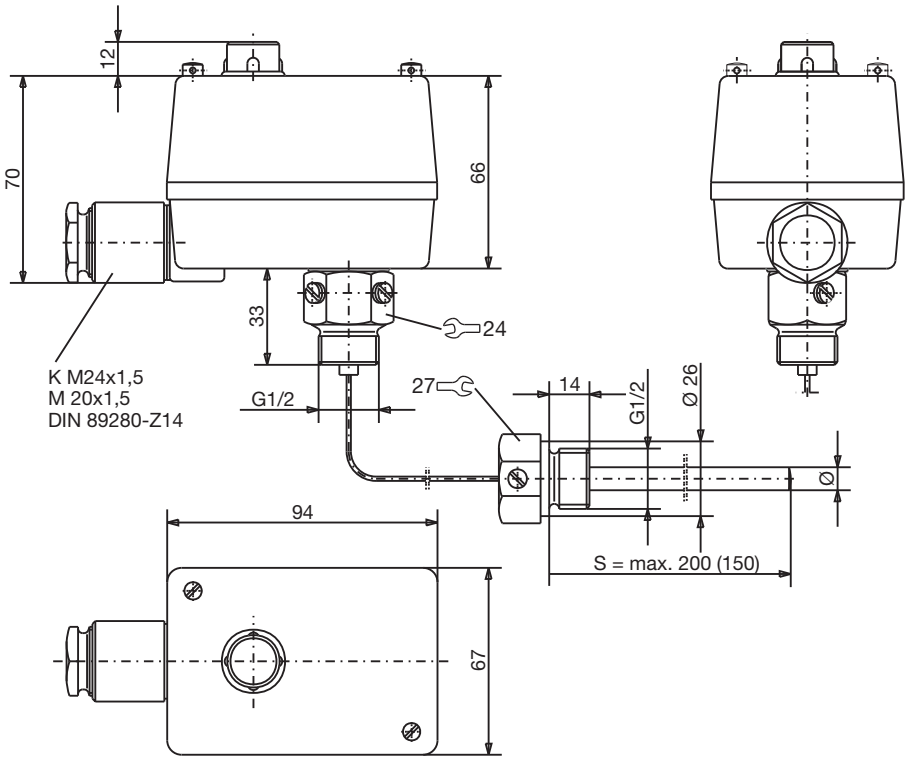

JUMO GmbH & Co. KG
Delivery address: Mackenrodtstraße 14
36039 Fulda, Germany
Postal address: 36035 Fulda, Germany
Phone: +49 661 6003-0
Fax: +49 661 6003-607
Email: mail@jumo.net
Internet: www.jumo.net

JUMO Instrument Co. Ltd.
JUMO House
Temple Bank, Riverway
Harlow, Essex, CM20 2DY, UK
Phone: +44 1279 63 55 33
Fax: +44 1279 62 50 29
Email: sales@jumo.co.uk
Internet: www.jumo.co.uk

JUMO Process Control, Inc.
6733 Myers Road
East Syracuse, NY 13057, USA
Phone: +1 315 437 5866
Fax: +1 315 437 5860
Email: info.us@jumo.net
Internet: www.jumousa.com

Connection diagram

The connection diagram in the data sheet provides preliminary information about the connection options. For the electrical connection, only use the installation instructions or the operating manual. The knowledge and the correct technical compliance with the safety information and warnings contained in these documents are mandatory for mounting, electrical connection, and startup as well as for safety during operation.

Wiring diagrams

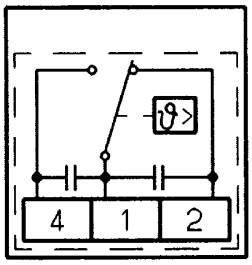

TW/STW (STB)

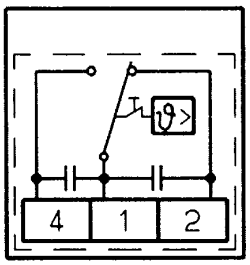

STB as N/C contact with signal contact

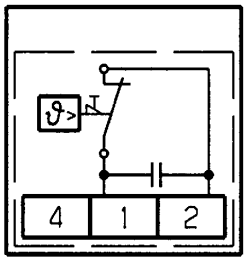

STB with N/C contact

JUMO GmbH & Co. KG
Delivery address: Mackenrodtstraße 14
36039 Fulda, Germany
Postal address: 36035 Fulda, Germany
Phone: +49 661 6003-0
Fax: +49 661 6003-607
Email: mail@jumo.net
Internet: www.jumo.net

JUMO Instrument Co. Ltd.
JUMO House
Temple Bank, Riverway
Harlow, Essex, CM20 2DY, UK
Phone: +44 1279 63 55 33
Fax: +44 1279 62 50 29
Email: sales@jumo.co.uk
Internet: www.jumo.co.uk

JUMO Process Control, Inc.
6733 Myers Road
East Syracuse, NY 13057, USA
Phone: +1 315 437 5866
Fax: +1 315 437 5860
Email: info.us@jumo.net
Internet: www.jumousa.com

Order details

	(1)	**Basic type**
603031		Surface-mounting thermostat ATH.-SE
	(2)	**Basic type extension**
02		ATH.-SE-2 Temperature monitor TW
20		ATH.-SE-20 Safety temperature monitor (STW [STB])
70		ATH.-SE-70 Safety temperature limiter (STB)
	(3)	**Design**
1		ATH**s**-SE-.. rigid shaft
2		ATH**f**-SE-.. capillary
	(4)	**Control range (TW)**
025		0 to 100 °C
041		20 to 90 °C
042		20 to 120 °C
043		20 to 150 °C
052		30 to 110 °C
062		50 to 200 °C
063		50 to 250 °C
064		50 to 300 °C
067		60 to 140 °C
	(5)	**Hysteresis**
00		None
15		1.5 %
30		3 %
60		6 %
	(6)	**Capillary length**
0		None
1000		1000 mm
2000		2000 mm
	(7)	**Capillary material**
00		None
20		CrNi (stainless steel)
40		Cu (copper)
	(8)	**Process connection**
10		Plain cylindrical probe
20		Screw-in thermowell 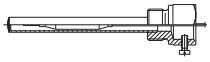
30		Screw-in thermowell with intermediate piece 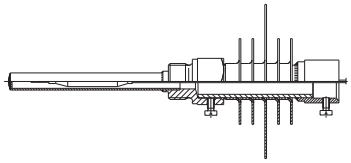
	(9)	**Process connection thread**
00		None
13		G 1/2
	(10)	**Process connection material**
00		None
20		CrNi (stainless steel)
40		CuZn (copper)

JUMO GmbH & Co. KG
Adresse de livraison :
Mackenrodtstraße 14
36039 Fulda, Allemagne
Adresse postale :
36035 Fulda, Allemagne
Tél. : +49 661 6003-0
Fax. : +49 661 6003-607
E-Mail : mail@jumo.net
Internet : www.jumo.net

JUMO-REGULATION SAS
7 rue des Drapiers
B.P. 45200
57075 Metz Cedex 3, France
Tél. : +33 3 87 37 53 00
Fax. : +33 3 87 37 89 00
E-Mail : info.fr@jumo.net
Internet : www.jumo.fr

JUMO AUTOMATION S.P.R.L. / P.G.M.B.H. / B.V.B.A
Industriestraße 18
4700 Eupen, Belgique
Tél. : +32 87 59 53 00
Fax. : +32 87 74 02 03
E-Mail : info@jumo.be
Internet : www.jumo.be

JUMO Mess- und Regeltechnik AG
Laubisrütistrasse 70
8712 Stäfa, Suisse
Tél. : +41 44 928 24 44
Fax. : +41 44 928 24 48
E-Mail : info@jumo.ch
Internet : www.jumo.ch

	(11)	**Insertion length**
000		Without thermowell
100		100 mm
120		120 mm
150		150 mm
200		200 mm
	(12)	**Immersion tube diameter**
00		Without thermowell
08		8 mm
10		10 mm
	(13)	**Probe diameter**
6		6 mm
8		8 mm
	(14)	**Extra codes**
000		None
574		Microswith with N/C contact, restart lock and additional signal contact (only for STB)

	(1)		(2)		(3)		(4)		(5)		(6)		(7)		(8)	
Order code		/		-		-		-		-		-		-		-
Order example	603031	/	20	-	1	-	025	-	15	-	0	-	00	-	20	-

	(9)		(10)		(11)		(12)		(13)		(14)	
		-		-		-		-		/		, ...[a]
	13	-	46	-	150	-	8	-	6	/	000	

[a] List extra codes in sequence, separated by commas.

JUMO GmbH & Co. KG
Delivery address: Mackenrodtstraße 14
36039 Fulda, Germany
Postal address: 36035 Fulda, Germany
Phone: +49 661 6003-0
Fax: +49 661 6003-607
Email: mail@jumo.net
Internet: www.jumo.net

JUMO Instrument Co. Ltd.
JUMO House
Temple Bank, Riverway
Harlow, Essex, CM20 2DY, UK
Phone: +44 1279 63 55 33
Fax: +44 1279 62 50 29
Email: sales@jumo.co.uk
Internet: www.jumo.co.uk

JUMO Process Control, Inc.
6724 Joy Road
East Syracuse, NY 13057, USA
Phone: +1 315 437 5866
Fax: +1 315 437 5860
Email: info.us@jumo.net
Internet: www.jumousa.com

Surface-mounted thermostat ATH.-SW
Single and double thermostat

Special features

- Temperature monitor TW
- Safety temperature monitor STW (STB)
- Safety temperature limiter STB
- Protection type IP65
- Control range -50[1] to +500 °C

ATHs-SW (Type 603035/...-1-...)

Brief description

Thermostats control and monitor thermal processes. ATH.-SW surface-mounted thermostats consist of one or two separate measuring and switching systems.

The devices are available as temperature monitors TW, safety temperature monitors STW (STB), and safety temperature limiters STB. In the event of a malfunction, the STB puts the monitored system into a safe operating state.

Surface-mounted thermostats operate on the principle of liquid expansion; a microswitch serves as the electrical switching element.

Switching function

Temperature monitor TW
If the temperature on the temperature probe exceeds the setpoint value, the electrical circuit is opened or closed by a microswitch. If the temperature falls below the selected setpoint value (by the switching differential), the microswitch is reset to its initial position.

Restart lock at safety temperature limiter STB
If the temperature at the temperature sensor exceeds the set limit value, the electrical circuit is opened and the microswitch is mechanically locked. After falling below the limit value by approx. 10 % of the temperature range (approx. 15 % of the limit value setting > +350 °C), the switch can be unlocked manually.

Use of the safety temperature monitor STW as safety temperature limiter STB
In this case, the circuit following the thermostat must comply with DIN EN 14597 and VDE 0116.

Self-monitoring for safety temperature limiter STB and safety temperatur monitor STW (STB)
If the measuring system is destroyed (i.e. if the expansion fluid escapes) the pressure in the membrane of the STB and STW (STB) drops and permanently opens the electrical circuit. Unlocking is then no longer possible. When the STW (STB) and STB sensors cools down to the negative temperature range, the circuit opens, but must be manually unlocked by the reclosing button when the temperature rises. The STW (STB) automatically restarts.

ATHf-SW (Type 603035/...-2-...)

[1] upon request

Approvals and approval marks (see Technical data)

JUMO GmbH & Co. KG
Delivery address: Mackenrodtstraße 14
36039 Fulda, Germany
Postal address: 36035 Fulda, Germany
Phone: +49 661 6003-0
Fax: +49 661 6003-607
Email: mail@jumo.net
Internet: www.jumo.net

JUMO Instrument Co. Ltd.
JUMO House
Temple Bank, Riverway
Harlow, Essex, CM20 2DY, UK
Phone: +44 1279 63 55 33
Fax: +44 1279 62 50 29
Email: sales@jumo.co.uk
Internet: www.jumo.co.uk

JUMO Process Control, Inc.
6724 Joy Road
East Syracuse, NY 13057, USA
Phone: +1 315 437 5866
Fax: +1 315 437 5860
Email: info.us@jumo.net
Internet: www.jumousa.com

Technical data

Control ranges and temperature probes

	Liquid-filled			
Switching function	Control/limit value ranges °C	Max. admissible probe temperature °C	Max. capillary length mm	Probe length, dimension „L“ Probe Ø „d“ = 6 mm[a] mm
TW	-20 to +50	60	5,000	141
	-10 to +40	50		185
	0 to 50	60		185
	0 to 70	80		138
	0 to 100	125		107
	20 to 90	115		138
	30 to 110	135		125
	20 to 120	140		106
	60 to 130	150		135
	20 to 150	175		88
	50 to 200	230		101
	50 to 250	290		73
	50 to 300	345		63
STW (STB) and STB	30 to 110	135	5,000	108
	60 to 130	150		116
	20 to 150	175		077
	50 to 250	290		064
	50 to 300	345		055
	Gas-filled			
TW	20 to 400	460	1,000	278
	20 to 500	575	2,000	148
	20 to 500	575	4,000	202
STW (STB) and STB	20 to 400	460	1,000	176
	20 to 500	575	2,000	127
	20 to 500	575	4,000	202

[a] Standard

Capillary and temperature probe

Type	Scale limit value	Capillary	Temperature probe
ATH.-SW	Up to 200 °C	Copper (Cu), Ø 1.5mm, material no. Cu-DHP	Copper (Cu), material no. Cu-DHP, hard soldered
	Up to 350 °C	Copper (Cu), Ø 1.5mm material no. Cu-DHP	Stainless steel (CrNi), material no. 1.4571, hard soldered
	Up to 350 °C	Stainless steel (CrNi), Ø 1.5mm	Stainless steel (CrNi), material no. 1.4571, welded (extra cost)
	Up to 500 °C	Stainless steel (CrNi), Ø 1.5mm	Stainless steel (CrNi), material no. 1.4571, welded
Capillary length	1,000 mm, max. 5,000 mm as standard		
Minimum bending radius of capillary	5 mm		

JUMO GmbH & Co. KG
Delivery address: Mackenrodtstraße 14
36039 Fulda, Germany
Postal address: 36035 Fulda, Germany
Phone: +49 661 6003-0
Fax: +49 661 6003-607
Email: mail@jumo.net
Internet: www.jumo.net

JUMO Instrument Co. Ltd.
JUMO House
Temple Bank, Riverway
Harlow, Essex, CM20 2DY, UK
Phone: +44 1279 63 55 33
Fax: +44 1279 62 50 29
Email: sales@jumo.co.uk
Internet: www.jumo.co.uk

JUMO Process Control, Inc.
6724 Joy Road
East Syracuse, NY 13057, USA
Phone: +1 315 437 5866
Fax: +1 315 437 5860
Email: info.us@jumo.net
Internet: www.jumousa.com

Electrical data

Switching function	TW, STW (STB) Microswitch with changeover contact	STB Microswitch with NC contact and restart lock
Max. contact rating with switching differential 1.5 % and 2 %	AC 230 V +10 %, 10 (2)[a] A, cos φ = 1 (0.6)[a], DC 230 V +10 %, 0.25 A AC 230 V +10 %, 6 (1.2)[a] A, cos φ = 1 (0.6)[a]	-
	Microswitch with gold-plated contacts, extra code 702 (only with switching differential 3 %, 5 %, and 7 %), AC/DC 24 V, 0.1 A, contact resistance 2.5 to 10 mΩ	

Contact reliability	To ensure high switching reliability, we recommend a minimum load of:
with silver contacts	AC/DC = 24 V, 100 mA
with gold-plated contacts (extra code 702)	AC/DC = 10 V, 5 mA

[a] Inductive loads

Environmental influences

Switching difference in % of the control/limit value range	Liquid-filled		Gas-filled		
Switching function	Rated value	Poss. acutal value	Rated value	Poss. actual value	
TW	3	3 max. 5	5	4 max. 8	Standard
	6	6 max. 8	9	8 max. 12	Upon request
	1,5	1 max. 2	2	1.5 max. 2.5	Extra cost
STW (STB)	5	4 max. 6	7	5 max. 12	Standard
	9	8 max. 11	9	8 max. 16	Upon request
	2	1 max. 3	2	1.5 max. 3	Extra cost
Switching point accuracy in % of the control/limit value range					
Switching function TW	In the upper third of the scale ± 1.5 %, at scale beginning ± 6 %				
Switching function STB, STW (STB)	In the upper third of the scale +0/-5 %, at scale beginning +0/-10 %				

Ambient temperature influence	based on the control/limit value range When the ambient temperature on the case deviates from the calibration ambient temperature 22 °C, a switch point offset occurs. Higher ambient temperatures = lower switching point Lower ambient temperature = higher switching point					
Surface-mounted thermostat with scale limit value	< 200 °C		≥ 200 °C ≤ 350 °C		> 350 °C ≤ 500 °C	
Switching function	TW	STB/STW (STB)	TW	STB/STW (STB)	TW	STB/STW (STB)
Influence on the switch head	0.08 %/K	0.17 %/K	0.06 %/K	0.13 %/K	0.14 %/K	0.12 %/K
Influence on the capillary per metre	0.047 %/K	0.054 %/K	0.09 %/K	0.11 %/K	0.04 %/K	0.03 %/K
Admissible storage temperature	-50 to +50 °C or up to max. permissible ambient temperature (see nameplate					
Admissible ambient temperature during use	See nameplate					
Rated position (NL)	Any					

JUMO GmbH & Co. KG
Delivery address: Mackenrodtstraße 14
36039 Fulda, Germany
Postal address: 36035 Fulda, Germany
Phone: +49 661 6003-0
Fax: +49 661 6003-607
Email: mail@jumo.net
Internet: www.jumo.net

JUMO Instrument Co. Ltd.
JUMO House
Temple Bank, Riverway
Harlow, Essex, CM20 2DY, UK
Phone: +44 1279 63 55 33
Fax: +44 1279 62 50 29
Email: sales@jumo.co.uk
Internet: www.jumo.co.uk

JUMO Process Control, Inc.
6724 Joy Road
East Syracuse, NY 13057, USA
Phone: +1 315 437 5866
Fax: +1 315 437 5860
Email: info.us@jumo.net
Internet: www.jumousa.com

Housing

Material	Aluminium die casting, painted (standard)
Set point value setting	Switching point can be adjusted with a screwdriver once the case lid has been removed.
Protection type	IP65 according to DIN EN 60529
Cable inlet	Cable screw connection M20 × 1.5, sealing range 6 to 12 mm (standard)
Weight	Approx. 1.2 kg
Switch head fastening Type ATHf-SW with capillary	With 2 screws through the case bottom section (wall mounting), lateral capillary outlet in the case.

Process connection

Type ATHs-SW with rigid shaft	
Scale limit value up to 150 °C	Process connection 20: Screw-in sleeve with screw-in spigot G 1/2″, form A, as per DIN 3852/2
Scale limit value exceeding 150 °C	Process connection 30: Screw-in sleeve with screw-in spigot G 1/2″, form A, as per DIN 3852/2, and intermediate piece, to ensure that the max. admissible ambient temperature is not exceeded on the case
Type ATHf-SW with capillary	Process connection 10: Plain cylindrical probe (standard) Process connection 20: Screw-in thermowell (upon request) Screw-in sleeve with screw-in spigot G 1/2″, form A, as per DIN 3852/2, and clamping piece with fixing screw to lock the probe
Material	
Process connection 20	
Up to 150 °C	CuZn (standard)
Exceeding 150 °C	CrNi
Process connection 30	
Exceeding 150 °C	CrNi
Fitting length	Standard lengths: 100, 120, 150, 200 or 300 mm (different lengths upon request)
Immersion tube Ø	Single thermostat D = 8 mm, Double thermostat D = 15 mm

⇨ For different process connections and thermowells refer to data sheet 606710.

JUMO GmbH & Co. KG
Delivery address: Mackenrodtstraße 14
36039 Fulda, Germany
Postal address: 36035 Fulda, Germany
Phone: +49 661 6003-0
Fax: +49 661 6003-607
Email: mail@jumo.net
Internet: www.jumo.net

JUMO Instrument Co. Ltd.
JUMO House
Temple Bank, Riverway
Harlow, Essex, CM20 2DY, UK
Phone: +44 1279 63 55 33
Fax: +44 1279 62 50 29
Email: sales@jumo.co.uk
Internet: www.jumo.co.uk

JUMO Process Control, Inc.
6724 Joy Road
East Syracuse, NY 13057, USA
Phone: +1 315 437 5866
Fax: +1 315 437 5860
Email: info.us@jumo.net
Internet: www.jumousa.com

Approvals and approval marks

DIN	
Testing agency	DIN CERTCO/TÜV Süd
Certificates/certification number	TW892
Inspection basis	DIN EN 14597
Valid for	ATH.-SW-2 (Type 603035/0002 [TW])
DIN	
Testing agency	DIN CERTCO/TÜV Süd
Certificates/certification number	STW(STB)894S
Inspection basis	DIN EN 14597
Valid for	ATH.-SW-20 (Typ 603035/0020 [STW (STB)])
DIN	
Testing agency	DIN CERTCO/TÜV Süd
Certificates/certification number	TW/TW901
Inspection basis	DIN EN 14597
Valid for	ATH.-SW-22 (Type 603035/0202 [TW/TW])
DIN	
Testing agency	DIN CERTCO/TÜV Süd
Certificates/certification number	STB895
Inspection basis	DIN EN 14597
Valid for	ATH.-SW-70 (Type 603035/0070 [STB])
DIN	
Testing agency	DIN CERTCO/TÜV Süd
Certificates/certification number	TW/STW(STB)903S
Inspection basis	DIN EN 14597
Valid for	ATH.-SW-220 (Type 603035/0220 [TW/STW (STB)])
DIN	
Testing agency	DIN CERTCO/TÜV Süd
Certificates/certification number	TW/STB904
Inspection basis	DIN EN 14597
Valid for	ATH.-SW-270 (Type 603035/0270 [TW/STB])
DIN	
Testing agency	DIN CERTCO/TÜV Süd
Certificates/certification number	2xSTW(STB)905S
Inspection basis	DIN EN 14597
Valid for	ATH.-SW-2020 (Type 603035/2020 [STW (STB)/STW (STB)])
DIN	
Testing agency	DIN CERTCO/TÜV Süd
Certificates/certification number	STW(STB)/STB906S
Inspection basis	DIN EN 14597
Valid for	ATH.-SW-2070 (Type 603035/2070 [STW (STB)/STB]
DIN	
Testing agency	DIN CERTCO/TÜV Süd
Certificates/certification number	STB/STB907
Inspection basis	DIN EN 14597
Valid for	ATH.-SW-7070 (Type 603035/7070 [STB/STB])

JUMO GmbH & Co. KG
Delivery address: Mackenrodtstraße 14
36039 Fulda, Germany
Postal address: 36035 Fulda, Germany
Phone: +49 661 6003-0
Fax: +49 661 6003-607
Email: mail@jumo.net
Internet: www.jumo.net

JUMO Instrument Co. Ltd.
JUMO House
Temple Bank, Riverway
Harlow, Essex, CM20 2DY, UK
Phone: +44 1279 63 55 33
Fax: +44 1279 62 50 29
Email: sales@jumo.co.uk
Internet: www.jumo.co.uk

JUMO Process Control, Inc.
6724 Joy Road
East Syracuse, NY 13057, USA
Phone: +1 315 437 5866
Fax: +1 315 437 5860
Email: info.us@jumo.net
Internet: www.jumousa.com

DGRL	
Testing agency	TÜV Süd
Certificates/certification number	Z-IS-TAF-MUC-17-11-2652099-021
Inspection basis	2014/68/EU, DIN EN 14597
Valid for	ATH.-SW-20 (Type 603035/0020 [STW (STB)]), ATH.-SW-70 (Type 603035/0070 [STB]), ATH.-SW-220 (Type 603035/0220 [TW/STW (STB)]), ATH.-SW-270 (Type 603035/0270 [TW/STB]), ATH.-SW-2020 (Type 603035/2020 [STW (STB)/STW (STB)]), ATH.-SW-2070 (Type 603035/2070 [STW (STB)/STB]), ATH.-SW-7070 (Type 603035/7070 [STB/STB])
EAC[a]	
Testing agency	GOST Norm AG
Certificates/certification number	EAC TR ZU
Inspection basis	TR ZU 004/2011 (LVD)
Valid for	ATH.-SW (Type 603035)

[a] Russian documentation upon request

Note
Physical and toxic features of the expansion means, which could emerge in the event of a measuring system break.

Control range with scale limit value	Hazardous reactions	Fire and explosion hazard		Information about toxicology			
		Ignition temperature	Explosion limit	Hazardous to waters	Irritant	Dangerous to health	Toxic
Liquid-filled							
≤ 200 °C	No	355 °C	0.6 to 8 V%	Yes	Yes	[a]	No
≥ 200 ≤ 350 °C	No	490 °C	-	Yes	Yes	[a]	No
Gas-filled							
≥ 400 ≤ 500 °C	No	No	No	No	No	No	No

[a] There is currently no limited statement by the health authority concerning hazards to health in the event of short-term exposure and low concentration, e.g. measuring system break.

JUMO GmbH & Co. KG
Delivery address: Mackenrodtstraße 14
36039 Fulda, Germany
Postal address: 36035 Fulda, Germany
Phone: +49 661 6003-0
Fax: +49 661 6003-607
Email: mail@jumo.net
Internet: www.jumo.net

JUMO Instrument Co. Ltd.
JUMO House
Temple Bank, Riverway
Harlow, Essex, CM20 2DY, UK
Phone: +44 1279 63 55 33
Fax: +44 1279 62 50 29
Email: sales@jumo.co.uk
Internet: www.jumo.co.uk

JUMO Process Control, Inc.
6724 Joy Road
East Syracuse, NY 13057, USA
Phone: +1 315 437 5866
Fax: +1 315 437 5860
Email: info.us@jumo.net
Internet: www.jumousa.com

Dimensions

ATHs-SW (Type 603035/...-1-...) with process connection screw-in thermowell

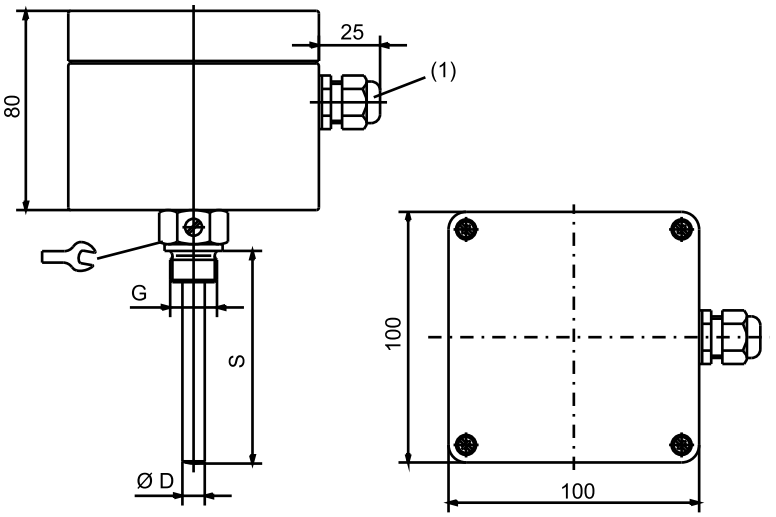

(1) Screw connection M20 × 1.5

ATHf-SW (Type 603035/...-2-...) with capillary and process connection plain cylindrical probe

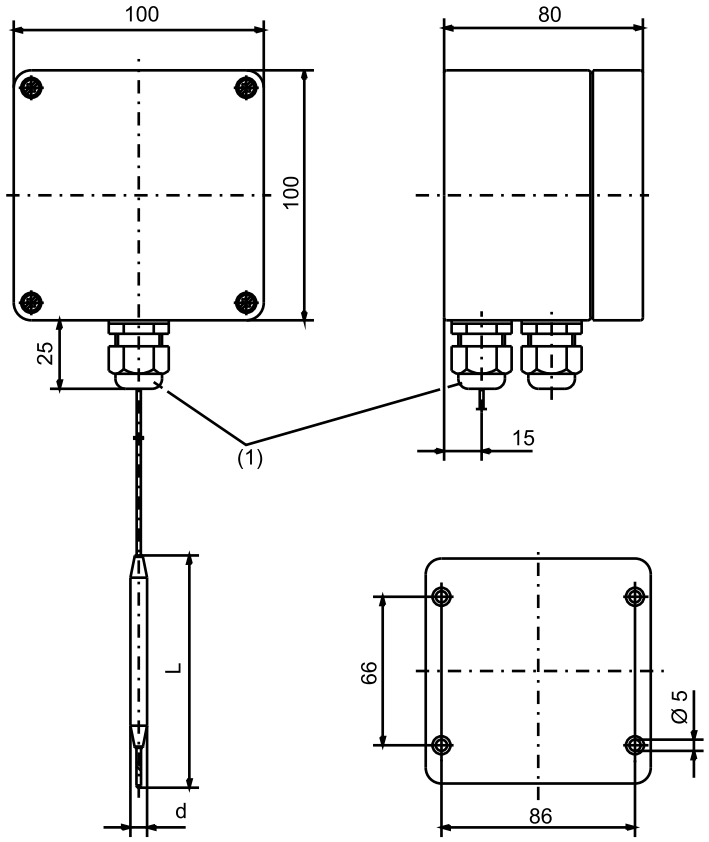

(1) Screw connection M20 × 1.5

JUMO GmbH & Co. KG
Delivery address: Mackenrodtstraße 14
36039 Fulda, Germany
Postal address: 36035 Fulda, Germany
Phone: +49 661 6003-0
Fax: +49 661 6003-607
Email: mail@jumo.net
Internet: www.jumo.net

JUMO Instrument Co. Ltd.
JUMO House
Temple Bank, Riverway
Harlow, Essex, CM20 2DY, UK
Phone: +44 1279 63 55 33
Fax: +44 1279 62 50 29
Email: sales@jumo.co.uk
Internet: www.jumo.co.uk

JUMO Process Control, Inc.
6724 Joy Road
East Syracuse, NY 13057, USA
Phone: +1 315 437 5866
Fax: +1 315 437 5860
Email: info.us@jumo.net
Internet: www.jumousa.com

Connection diagram

The connection diagram in the data sheet provides information on product selection.

For the electrical connection, only use the installation instructions or the operating manual..

Type	System	Switching function	
Single thermostat	-	TW, STW	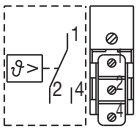
	-	STB	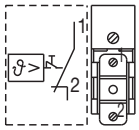

Type	System	Switching function	
Double thermostat	System I and System II: with changeover contact	TW, STW	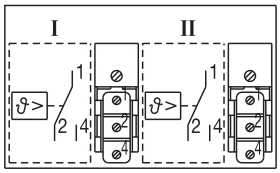
	System I: with changeover contact	TW, STW	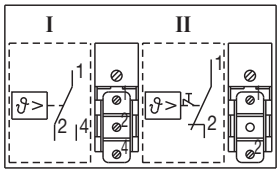
	System II: with NC contact and restart lock	STB	
	System I and System II: with NC contact and restart lock	STB	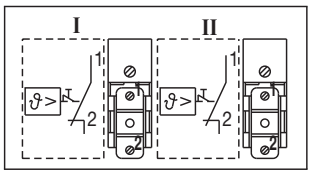

JUMO GmbH & Co. KG
Delivery address: Mackenrodtstraße 14
36039 Fulda, Germany
Postal address: 36035 Fulda, Germany
Phone: +49 661 6003-0
Fax: +49 661 6003-607
Email: mail@jumo.net
Internet: www.jumo.net

JUMO Instrument Co. Ltd.
JUMO House
Temple Bank, Riverway
Harlow, Essex, CM20 2DY, UK
Phone: +44 1279 63 55 33
Fax: +44 1279 62 50 29
Email: sales@jumo.co.uk
Internet: www.jumo.co.uk

JUMO Process Control, Inc.
6724 Joy Road
East Syracuse, NY 13057, USA
Phone: +1 315 437 5866
Fax: +1 315 437 5860
Email: info.us@jumo.net
Internet: www.jumousa.com

Order details

	(1)	**Basic type**	
603035		Aufbauthermostat ATH.-SW	
	(2)	**Basic type extension**	
0002		ATH.-SW-2	Temperature monitor (TW)
0020		ATH.-SW-20	Safety temperature monitor (STW)
0070		ATH.-SW-70	Safety temperature limiter (STB)
0202		ATH.-SW-22	Temperature monitor/Temperature monitor (TW/TW)
0220		ATH.-SW-220	Temperature monitor/safety temperature monitor (TW/STW (STB))
0270		ATH.-SW-270	Temperature monitor/safety temperature limiter (TW/STB)
2020		ATH.-SW-2020	Safety temperature monitor/safety temperature monitor (STW (STB)/STW (STB))
2070		ATH.-SW-2070	Safety temperature monitor/safety temperature limiter (STW (STB)/STB)
7070		ATH.-SW-7070	Safety temperature limiter/safety temperature limiter (STB/STB)
	(3)	**Design**	
1		Rigid shaft (ATHs-SW)	
2		Capillary (ATHf-SW)	
	(4)	**Control range (TW)**	
014		-20 to +50 °C	
016		-10 to +40 °C	
021		0 to 50 °C	
022		0 to 70 °C	
025		0 to 100 °C	
041		20 to 90 °C	
042		20 to 120 °C	
043		20 to 150 °C	
045		20 to 400 °C	
046		20 to 500 °C	
052		30 to 110 °C	
062		50 to 200 °C	
063		50 to 250 °C	
064		50 to 300 °C	
066		60 to 130 °C	
	(5)	**Limit value range (STB)**	
000		With permanently set limit value	
014		-20 to +50 °C	
016		-10 to +40 °C	
021		0 to 50 °C	
022		0 to 70 °C	
025		0 to 100 °C	
041		20 to 90 °C	
042		20 to 120 °C	
043		20 to 150 °C	
045		20 to 400 °C	
046		20 to 500 °C	
052		30 to 110 °C	
062		50 to 200 °C	
063		50 to 250 °C	
064		50 to 300 °C	
066		60 to 130 °C	

JUMO GmbH & Co. KG
Delivery address: Mackenrodtstraße 14
36039 Fulda, Germany
Postal address: 36035 Fulda, Germany
Phone: +49 661 6003-0
Fax: +49 661 6003-607
Email: mail@jumo.net
Internet: www.jumo.net

JUMO Instrument Co. Ltd.
JUMO House
Temple Bank, Riverway
Harlow, Essex, CM20 2DY, UK
Phone: +44 1279 63 55 33
Fax: +44 1279 62 50 29
Email: sales@jumo.co.uk
Internet: www.jumo.co.uk

JUMO Process Control, Inc.
6724 Joy Road
East Syracuse, NY 13057, USA
Phone: +1 315 437 5866
Fax: +1 315 437 5860
Email: info.us@jumo.net
Internet: www.jumousa.com

	(6)	**Switching differential 1**
00		None
15		1.5 %
20		2 %
30		3 %
50		5 %
60		6 %
70		7 %
90		9 %
	(7)	**Switching differential 2**
00		None
15		1.5 %
20		2 %
30		3 %
50		5 %
60		6 %
70		7 %
90		9 %
	(8)	**Capillary length 1**
0		None
1000		1,000 mm
2000		2,000 mm
3000		3,000 mm
4000		4,000 mm
5000		5,000 mm
	(9)	**Capillary length 2**
0		None
1000		1,000 mm
2000		2,000 mm
3000		3,000 mm
4000		4,000 mm
5000		5,000 mm
	(10)	**Capillary material 1**
00		None
20		CrNi (stainless steel)
40		Cu (copper)
	(11)	**Capillary material 2**
00		None
20		CrNi (stainless steel)
40		Cu (copper)
	(12)	**Process connection**
10		Plain cylindrical probe 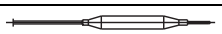
20		Screw-in thermowell 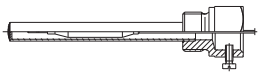
30		Screw-in thermowell with intermediate piece 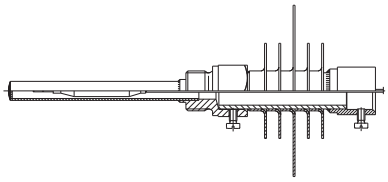

JUMO GmbH & Co. KG
Delivery address: Mackenrodtstraße 14
36039 Fulda, Germany
Postal address: 36035 Fulda, Germany
Phone: +49 661 6003-0
Fax: +49 661 6003-607
Email: mail@jumo.net
Internet: www.jumo.net

JUMO Instrument Co. Ltd.
JUMO House
Temple Bank, Riverway
Harlow, Essex, CM20 2DY, UK
Phone: +44 1279 63 55 33
Fax: +44 1279 62 50 29
Email: sales@jumo.co.uk
Internet: www.jumo.co.uk

JUMO Process Control, Inc.
6724 Joy Road
East Syracuse, NY 13057, USA
Phone: +1 315 437 5866
Fax: +1 315 437 5860
Email: info.us@jumo.net
Internet: www.jumousa.com

	(13)	**Thread of process connection**
00		None
13		G 1/2″
	(14)	**Material of process connection**
00		None
20		CrNi (stainless steel)
46		CuZn (brass)
	(15)	**Insertion length**
000		Without thermowell (ATHf-SW)
100		100 mm
120		120 mm
150		150 mm
200		200 mm
300		300 mm
	(16)	**Immersion tube diameter**
00		Without thermowell
8		8 mm
15		15 mm
	(17)	**Probe diameter**
6		6 mm
	(18)	**Extra codes**
000		None
702		Snap-action switch contact, gold-plated (only with switching differential 3 %, 5 %, and 7 %, and STB)

	(1)		(2)		(3)		(4)		(5)		(6)		(7)		(8)		(9)		(10)	
Order code		/		-		-		-		-		-		-		-		-		-
Order example	603035	/	0002	-	1	-	014	-	000	-	30	-	00	-	0	-	0	-	00	-

	(11)		(12)		(13)		(14)		(15)		(16)		(17)		(18)
		-		-		-		-		-		-		/	
	00	-	20	-	13	-	20	-	200	-	8	-	6	/	000

JUMO GmbH & Co. KG
Delivery address: Mackenrodtstraße 14
36039 Fulda, Germany
Postal address: 36035 Fulda, Germany
Phone: +49 661 6003-0
Fax: +49 661 6003-607
Email: mail@jumo.net
Internet: www.jumo.net

JUMO Instrument Co. Ltd.
JUMO House
Temple Bank, Riverway
Harlow, Essex, CM20 2DY, UK
Phone: +44 1279 63 55 33
Fax: +44 1279 62 50 29
Email: sales@jumo.co.uk
Internet: www.jumo.co.uk

JUMO Process Control, Inc.
6733 Myers Road
East Syracuse, NY 13057, USA
Phone: +1 315 437 5866
Fax: +1 315 437 5860
Email: info.us@jumo.net
Internet: www.jumousa.com

JUMO heatTHERM S600

Surface-mounted double thermostat

Special features

- Efficient startup
- One middle output for the thermowell
- Temperature monitor (TW)
- Safety temperature limiter (STB)
- Self-monitoring through capillary break protection
- Attractive visual design

Type 603045

Brief description

Thermostats control and monitor thermal processes. Surface-mounted double thermostats consist of two separate measuring and switching systems.

The device consists of a temperature monitor (TW) and a safety temperature limiter (STB).

Surface-mounted double thermostats operate according to the fluid expansion principle. A microswitch is used as the electrical switching element. The temperature is measured by a temperature probe.

Types	**Temperature monitor (TW)**	**Safety temperature limiter (STB)**	**Circuit diagram**
Switching function	If the entered setpoint value is reached when the temperature rises, the monitor switches the contact connection from 3-2 to 3-1. Once the temperature has dropped by the switching differential, the controller reestablishes the 3-2 contact connection.	If the switch-off temperature is reached when the temperature rises, the STB opens the 4-6 contact connection and remains mechanically locked in 5-6 this position. Once the temperature has dropped by approx. 10 K, the STB can be manually unlocked using a push button.	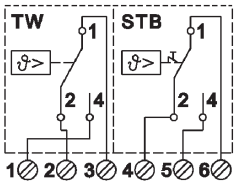

JUMO GmbH & Co. KG
Delivery address: Mackenrodtstraße 14
36039 Fulda, Germany
Postal address: 36035 Fulda, Germany
Phone: +49 661 6003-0
Fax: +49 661 6003-607
Email: mail@jumo.net
Internet: www.jumo.net

JUMO Instrument Co. Ltd.
JUMO House
Temple Bank, Riverway
Harlow, Essex, CM20 2DY, UK
Phone: +44 1279 63 55 33
Fax: +44 1279 62 50 29
Email: sales@jumo.co.uk
Internet: www.jumo.co.uk

JUMO Process Control, Inc.
6733 Myers Road
East Syracuse, NY 13057, USA
Phone: +1 315 437 5866
Fax: +1 315 437 5860
Email: info.us@jumo.net
Internet: www.jumousa.com

Technical data

General Information

Switching function	Control range	Switching differential	Max. probe temperature	Max. switching head temperature	Possible capillary length	Probe length dimension "L" in mm, Probe Ø "d" in mm, Ø 6 = Standard	
	°C	%	°C	°C	in mm to	Ø 6	Ø 8
TW	0 to 50	1	60	60	3 000	283	165
		2.5	60		3 000	283	165
		5	105		5 000	159	101
		7	110		5 000	117	80
	20 to 90	1	115	80	1 000	210	127
		2.5	115		1 000	210	127
		5	140		5 000	121	82
		7	175		5 000	91	67
	0 to 100	1	125	80	2 000	157	100
		2.5	125		2 000	157	100
		5	165		5 000	94	68
		7	200		5 000	73	58
	30 to 110	1	135	80	2 000	188	116
		2.5	135		2 000	188	116
		5	170		5 000	110	76
		7	200		5 000	84	63

Switching function	Limit value range	Limit value tolerance	Max. probe temperature	Max. switching head temperature	Possible capillary length	Probe length dimension "L" in mm, Probe Ø "d" in mm, Ø 6 = Standard	
	°C		°C	°C	in mm to	Ø 6	Ø 8
STB	45 to 70 75 to 110 95 to 120	-5 K to 0 K	Limit value +15 %	80	5 000	84	53

Observe the max. admissible probe temperature of the TW!

Other control ranges upon request.

JUMO GmbH & Co. KG
Delivery address: Mackenrodtstraße 14
36039 Fulda, Germany
Postal address: 36035 Fulda, Germany
Phone: +49 661 6003-0
Fax: +49 661 6003-607
Email: mail@jumo.net
Internet: www.jumo.net

JUMO Instrument Co. Ltd.
JUMO House
Temple Bank, Riverway
Harlow, Essex, CM20 2DY, UK
Phone: +44 1279 63 55 33
Fax: +44 1279 62 50 29
Email: sales@jumo.co.uk
Internet: www.jumo.co.uk

JUMO Process Control, Inc.
6733 Myers Road
East Syracuse, NY 13057, USA
Phone: +1 315 437 5866
Fax: +1 315 437 5860
Email: info.us@jumo.net
Internet: www.jumousa.com

Operating data

	Switching function	Switching differential %	In the upper third of the scale or limit value %	
Switching point accuracy in % of the control range/limit value range	TW	± 2.5	± 1.5	As a standard feature
		± 5	± 3	Upon request
		± 7	± 4	
		± 1	± 1.5	
	STB	-	See table for general information, limit value tolerance	
Mean ambient temperature influence	When the ambient temperature on the switching head and/or the capillary deviates from the calibration ambient temperature of 22 °C, a switching point offset occurs. Higher ambient temperature = lower switching point Lower ambient temperature = higher switching point			
Switching differential in %	TW			STB
	1 / 2.5 %	5 %	7 %	- %
Ambient temperature influence on the switching head in %/K	0.15	0.26	0.34	0.35
Ambient temperature influence on the capillary in %/m	0.05 × K × m		0.07 × K × m	
Temperatures Admissible storage temperature Admissible ambient temperature	 -30 to +50 °C During use: max. +80 °C			
Rated position (NL)	NL 0 to NL 90 according to DIN 16257 (other rated positions upon request)			

Process connection

With rigid thermowell Type: Protection tube "20" Type: Protection tube "21"	 Screw-in sleeve with screw-in spigot G 1/2, form A according to DIN 3852/2 Screw-in sleeve with screw-in spigot G 1/2, form A according to DIN 3852/2, open at bottom
With capillary Type: Plain cylindrical probe "10"	 See dimensions
Material Protection tube "20", "21"	 Brass (CuZn) as a standard feature Stainless steel (CrNi)
Insertion length (S)	Standard lengths: 100, 120, 150, 200, or 300 mm (other lengths upon request)
Immersion tube diameter (D)	15 mm

For different process connections and protection tubes refer to data sheet 606710.

Housing

Material/color Case lid Case bottom section	 ABS/RAL 7035 PA6/RAL 7001
Protection type	DIN EN 60529-IP54
Limit value setting	adjustable
Cable inlet[a]	M16 × 1.5, sealing range Ø 4.5 to 10 mm

[a] A second cable fitting is available as an option

JUMO GmbH & Co. KG
Delivery address: Mackenrodtstraße 14
36039 Fulda, Germany
Postal address: 36035 Fulda, Germany
Phone: +49 661 6003-0
Fax: +49 661 6003-607
Email: mail@jumo.net
Internet: www.jumo.net

JUMO Instrument Co. Ltd.
JUMO House
Temple Bank, Riverway
Harlow, Essex, CM20 2DY, UK
Phone: +44 1279 63 55 33
Fax: +44 1279 62 50 29
Email: sales@jumo.co.uk
Internet: www.jumo.co.uk

JUMO Process Control, Inc.
6733 Myers Road
East Syracuse, NY 13057, USA
Phone: +1 315 437 5866
Fax: +1 315 437 5860
Email: info.us@jumo.net
Internet: www.jumousa.com

Capillary and temperature probe

Capillary	
Diameter	1.5 mm
Min. bending radius	5 mm
Material	Copper (Cu)
Temperature probe	
Process connection[a]	10, 20, 21
Material	Copper (Cu)

[a] For process connections refer to data sheet 606710 (only 10, 20, 21).

Electrical data

Switching element Single-pole snap-action switch		TW	STB
		Microswitch with changeover contact	Microswitch with N/C contact, Restart lock and additional signal contact
Switching capacity at the terminals[a] 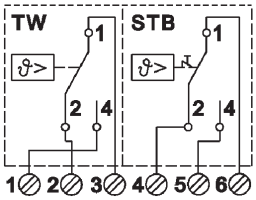 	Terminal 1, 2, 3, 4, 6	For silver contacts (standard):	AC 24 to 230 V, 0.1 to 10(2) A, cos φ = 1 (0.6)
			DC 24 to 230 V, 0.1 to 0.25 A
		For gold plated contacts (extra code 702):	AC 10 to 24 V, 0.005 to 0.1 A
			DC 10 to 24 V, 0.005 to 0.1 A
	Terminal 5	For silver contacts (standard):	AC 24 to 230 V, 0.1 to 2(0.4) A, cos φ = 1 (0.6)
			DC 24 to 230 V, 0.1 to 0.25 A
		For gold plated contacts (extra code 702):	AC 10 to 24 V, 0.005 to 0.1 A
			DC 10 to 24 V, 0.005 to 0.1 A
Rated surge voltage	2 500 V		
Overvoltage category	II		
Required fuse protection	See max. switching capacity		
Electrical connection	Screw terminal up to 2.5 mm^2 conductor cross section		

[a] As soon as a terminal (1, 2, 3, 4, 6) is connected with terminal 5, the following line applies: terminal 5.

JUMO GmbH & Co. KG
Delivery address: Mackenrodtstraße 14
36039 Fulda, Germany
Postal address: 36035 Fulda, Germany
Phone: +49 661 6003-0
Fax: +49 661 6003-607
Email: mail@jumo.net
Internet: www.jumo.net

JUMO Instrument Co. Ltd.
JUMO House
Temple Bank, Riverway
Harlow, Essex, CM20 2DY, UK
Phone: +44 1279 63 55 33
Fax: +44 1279 62 50 29
Email: sales@jumo.co.uk
Internet: www.jumo.co.uk

JUMO Process Control, Inc.
6733 Myers Road
East Syracuse, NY 13057, USA
Phone: +1 315 437 5866
Fax: +1 315 437 5860
Email: info.us@jumo.net
Internet: www.jumousa.com

Dimensions

Type 603045/... With rigid thermowell	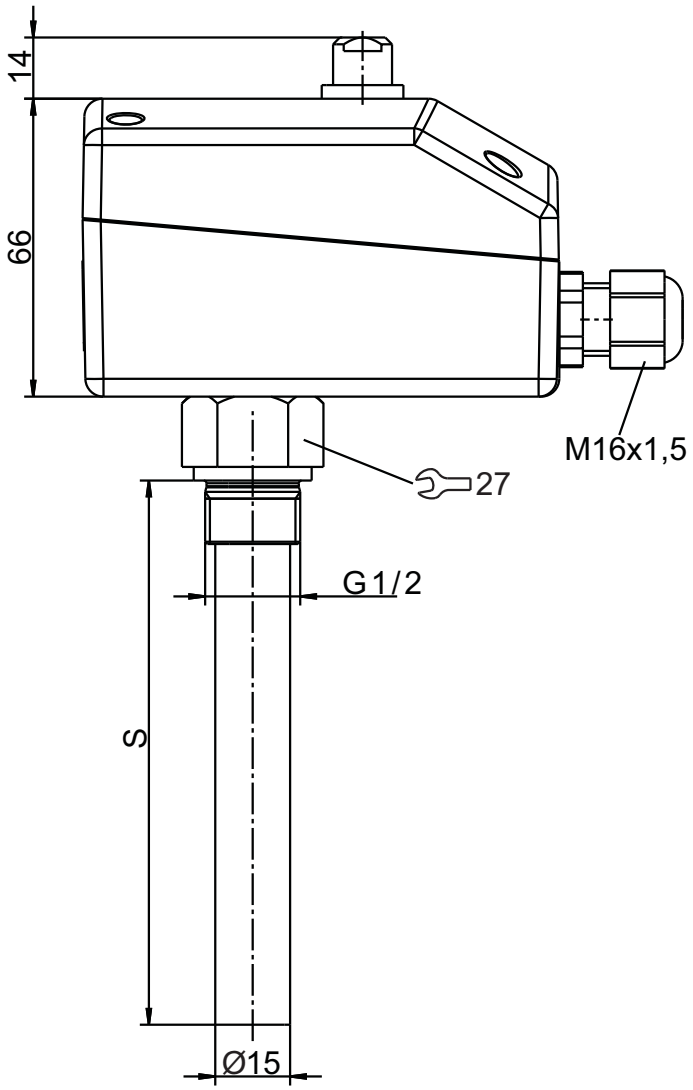
Type 603045/... View from above	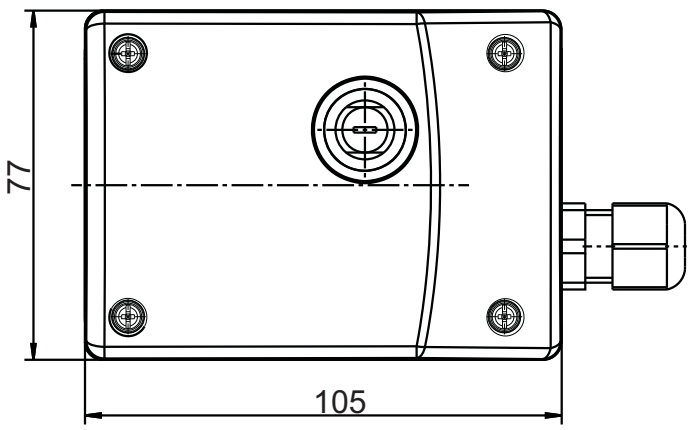

JUMO GmbH & Co. KG
Delivery address: Mackenrodtstraße 14
36039 Fulda, Germany
Postal address: 36035 Fulda, Germany
Phone: +49 661 6003-0
Fax: +49 661 6003-607
Email: mail@jumo.net
Internet: www.jumo.net

JUMO Instrument Co. Ltd.
JUMO House
Temple Bank, Riverway
Harlow, Essex, CM20 2DY, UK
Phone: +44 1279 63 55 33
Fax: +44 1279 62 50 29
Email: sales@jumo.co.uk
Internet: www.jumo.co.uk

JUMO Process Control, Inc.
6733 Myers Road
East Syracuse, NY 13057, USA
Phone: +1 315 437 5866
Fax: +1 315 437 5860
Email: info.us@jumo.net
Internet: www.jumousa.com

Type 603045/... Perspective	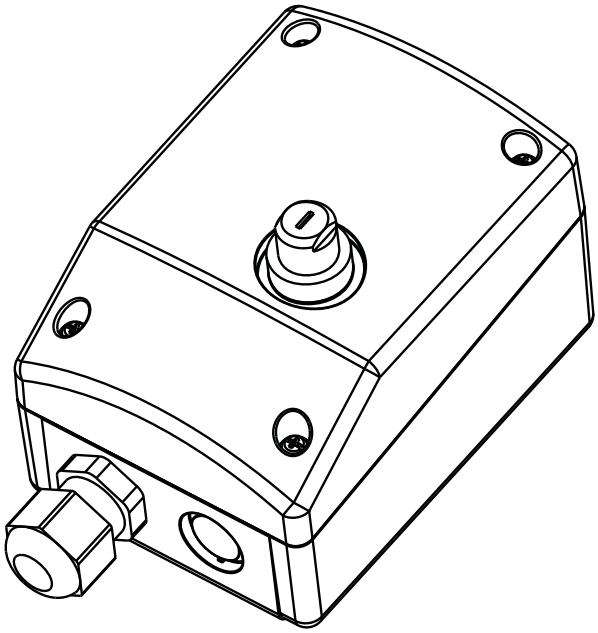
Type 603045/... View from above open	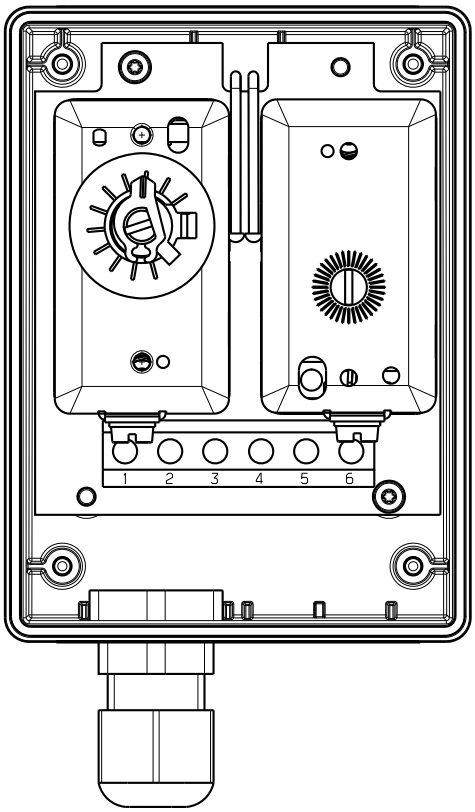

JUMO GmbH & Co. KG
Delivery address: Mackenrodtstraße 14
36039 Fulda, Germany
Postal address: 36035 Fulda, Germany
Phone: +49 661 6003-0
Fax: +49 661 6003-607
Email: mail@jumo.net
Internet: www.jumo.net

JUMO Instrument Co. Ltd.
JUMO House
Temple Bank, Riverway
Harlow, Essex, CM20 2DY, UK
Phone: +44 1279 63 55 33
Fax: +44 1279 62 50 29
Email: sales@jumo.co.uk
Internet: www.jumo.co.uk

JUMO Process Control, Inc.
6733 Myers Road
East Syracuse, NY 13057, USA
Phone: +1 315 437 5866
Fax: +1 315 437 5860
Email: info.us@jumo.net
Internet: www.jumousa.com

Type 603045/...
With capillary

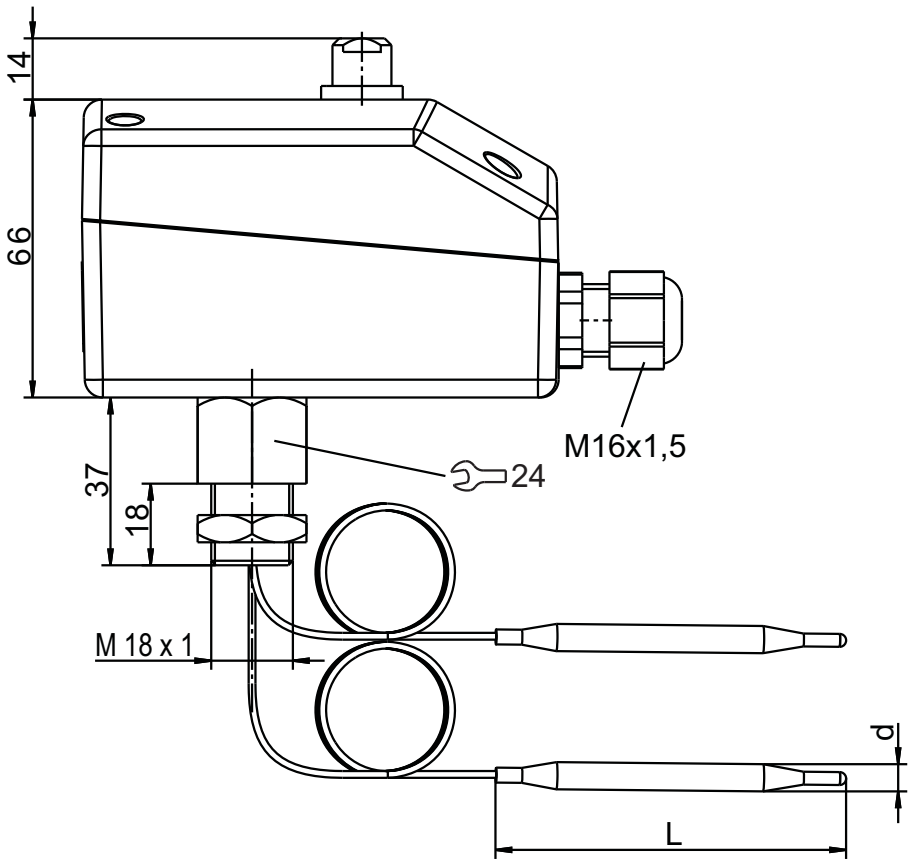

JUMO GmbH & Co. KG
Delivery address: Mackenrodtstraße 14
36039 Fulda, Germany
Postal address: 36035 Fulda, Germany
Phone: +49 661 6003-0
Fax: +49 661 6003-607
Email: mail@jumo.net
Internet: www.jumo.net

JUMO Instrument Co. Ltd.
JUMO House
Temple Bank, Riverway
Harlow, Essex, CM20 2DY, UK
Phone: +44 1279 63 55 33
Fax: +44 1279 62 50 29
Email: sales@jumo.co.uk
Internet: www.jumo.co.uk

JUMO Process Control, Inc.
6733 Myers Road
East Syracuse, NY 13057, USA
Phone: +1 315 437 5866
Fax: +1 315 437 5860
Email: info.us@jumo.net
Internet: www.jumousa.com

Order details

	(1)	**Basic type**	
603045		JUMO heatTHERM S600 – Surface-mounted double thermostat	
	(2)	**Basic type extension**	
0280		Temperature monitor (TW) and safety temperature limiter (STB)	
	(3)	**Design type**	
1		With rigid thermowell	
2		With capillary	
	(4)	**Control ranges** (TW)	
021		0 to 50 °C	
025		0 to 100 °C	
041		20 to 90 °C	
052		30 to 110 °C	
		Other ranges upon request	
	(5)	**Limit value range** (adjustable)	
374		45 to 70 °C	
075		75 to 100 °C	
461		95 to 120 °C	
		Other ranges upon request	
	(6)	**Switching differential** (from scale range)	
25		2.5 %	As a standard feature
10		1 %	
50		5 %	
70		7 %	
	(7)	**Capillary length**	
0		None	
1 000		1 000 mm	
2 000		2 000 mm	
3 000		3 000 mm	
4 000		4 000 mm	
5 000		5 000 mm	
...		Special length, different lengths (TW) (STB), specifications in plain text	
	(8)	**Process connection**	
10		Plain cylindrical probe	
20		Screw-in thermowell	
21		Screw-in thermowell open	
	(9)	**Thread of process connection**	
00		None	
13		External thread G 1/2	

JUMO GmbH & Co. KG
Delivery address: Mackenrodtstraße 14
36039 Fulda, Germany
Postal address: 36035 Fulda, Germany
Phone: +49 661 6003-0
Fax: +49 661 6003-607
Email: mail@jumo.net
Internet: www.jumo.net

JUMO Instrument Co. Ltd.
JUMO House
Temple Bank, Riverway
Harlow, Essex, CM20 2DY, UK
Phone: +44 1279 63 55 33
Fax: +44 1279 62 50 29
Email: sales@jumo.co.uk
Internet: www.jumo.co.uk

JUMO Process Control, Inc.
6733 Myers Road
East Syracuse, NY 13057, USA
Phone: +1 315 437 5866
Fax: +1 315 437 5860
Email: info.us@jumo.net
Internet: www.jumousa.com

	(10)	**Process connection material**
00		Only with process connection 10
46		Brass (CuZn) As a standard feature
26		Stainless steel (CrNi)
	(11)	**Insertion length "S" (thermowell length)**
000		None
100		100 mm
120		120 mm
150		150 mm
200		200 mm
300		300 mm
...		Special length, specifications in plain text
	(12)	**Diameter "D" (thermowell diameter)**
00		None
15		15 mm
	(13)	**Diameter "d" (probe diameter)**
6		6 mm
8		8 mm
	(14)	**Extra codes**
000		None
702		Snap-action switching contact with gold plating
707		Temperature compensation

Order code

(1)		(2)		(3)		(4)		(5)		(6)		(7)		(8)		(9)		(10)		(11)		(12)		(13)		(14)
	/		-		-		-		-		-		-		-		-		-		-		-		/	

Order example

603045	/	0280	-	1	-	052	-	461	-	70	-	0	-	20	-	13	-	46	-	150	-	15	-	6	/	707

Stock version

Type	Design type	Control range	Limit value range	Switching differential	Insertion length	Part no.
603045/0280	Rigid thermowell	30 to 110 °C	95 to 120 °C	5 %	150 mm	60003447

Type	Part no.
603045/0280-1-052-461-50-0-20-13-46-150-15-6/707	60003447

(Delivery within 3 working days after receipt of order)

JUMO GmbH & Co. KG
Delivery address: Mackenrodtstraße 14
36039 Fulda, Germany
Postal address: 36035 Fulda, Germany
Phone: +49 661 6003-0
Fax: +49 661 6003-607
E-mail: mail@jumo.net
Internet: www.jumo.net

JUMO Instrument Co. Ltd.
JUMO House
Temple Bank, Riverway
Harlow, Essex CM20 2DY, UK
Phone: +44 1279 635533
Fax: +44 1279 635262
E-mail: sales@jumo.co.uk
Internet: www.jumo.co.uk

JUMO Process Control, Inc.
6733 Myers Road
East Syracuse, NY 13057, USA
Phone: 315-437-5866
1-800-554-5866
Fax: 315-437-5860
E-mail: info.us@jumo.net
Internet: www.jumousa.com

Surface-mounting thermostats, type series AMTHF

with 2, 3 or 4 1-pole snap switches

Type AMTHF**s**-13

Special features

- Protection rating IP 54
- tested as per DIN EN 14597 (replacement for DIN 3440)

Type AMTHF**f**-13

Brief description

Add-on thermostats are used to control and monitor thermal processes. The devices of type series AMTHF are available with 2, 3 or 4 switching stages as temperature controllers (TR) and temperature monitors (TW). The sequential gap in Kelvin for the individual circuit stages is factory-set fixed as per customer request. Add-on thermostats operate according to the fluid expansion principle, a microswitch is used as an electrical switching element.

Switching function

Temperature controller (TR) and temperature monitor (TW)

If the temperature exceeds the setpoint value set on the temperature probe, the microswitch will be tripped by the transmission mechanics and the current circuit opened or closed. The microswitch is reset to its original status once the setpoint value set is gone below (by the hysteresis).

Types

Types		Switching function	Circuit stages
with rigid shaft	with capillary		
AMTHF**s**-13	AMTHF**f**-13	TR	2
AMTHF**s**-133	AMTHF**f**-133	TR	3
AMTHF**s**-1333	AMTHF**f**-1333	TR	4
AMTHF**s**-23	AMTHF**f**-23	TW	2
AMTHF**s**-233	AMTHF**f**-233	TW	3
AMTHF**s**-2333	AMTHF**f**-2333	TW	4

JUMO GmbH & Co. KG
Delivery address: Mackenrodtstraße 14
36039 Fulda, Germany
Postal address: 36035 Fulda, Germany
Phone: +49 661 6003-0
Fax: +49 661 6003-607
E-mail: mail@jumo.net
Internet: www.jumo.net

JUMO Instrument Co. Ltd.
JUMO House
Temple Bank, Riverway
Harlow, Essex CM20 2DY, UK
Phone: +44 1279 635533
Fax: +44 1279 635262
E-mail: sales@jumo.co.uk
Internet: www.jumo.co.uk

JUMO Process Control, Inc.
6733 Myers Road
East Syracuse, NY 13057, USA
Phone: 315-437-5866
1-800-554-5866
Fax: 315-437-5860
E-mail: info.us@jumo.net
Internet: www.jumousa.com

Technical data

Control range and probe table — fluid-filled

Control / limit value ranges °C	Hysteresis %	max. probe temperature °C	max. switch head temperature °C	possible capillary lengths in m	max. sequential gap *K*	Probe length dimension "L" in mm, Probe Ø "d" in mm Ø "6" = Standard	
						ø 6	ø 8
-20 to + 40	1 2.5 5 7	+ 50 + 50 + 95 + 100	+ 50 + 50 + 50 (80)[1] + 50 (80)[1]	5	5 8 25 50	245 245 138 103	145 145 91 73
0 to + 50	1 2.5 5 7	+ 60 + 60 + 105 + 110	+ 60 + 60 + 60 (80)[1] + 60 (80)[1]	3 3 5 5	5 10 25 50	283 283 159 117	165 165 101 80
+20 to + 90	1 2.5 5 7	+ 115 + 115 + 140 + 175	+ 80 + 80 + 80 + 80	1 1 5 5	7 14 35 70	210 210 121 91	127 127 82 67
0 to +100	1 2.5 5 7	+ 125 + 125 + 165 + 200	+ 80 + 80 + 80 + 80	2 2 5 5	10 20 50 100	157 157 94 73	100 100 68 58
+30 to +110	1 2.5 5 7	+ 135 + 135 + 170 + 200	+ 80 + 80 + 80 + 80	2 2 5 5	8 16 40 80	188 188 110 84	116 116 76 63
0 to +150	1 2.5 5	+ 173 + 173 + 200	+ 80 + 80 + 80	1	15 30 75	113 113 72	78 78 57
0 to +200	1 2.5	+ 230	+ 80	1	20 40	113	78
+50 to +200	1 2.5	+ 230	+ 80	1	15 30	139	92
+50 to +250	1 2.5 5	+ 228 + 228 + 300	+ 80 + 80 + 80	1 1 5	20 40 100	105 105 64	70 70 49
+50 to +300	1 2.5	+ 345 + 345	+ 80 + 80	2	25 50	87	61

[1] Values in brackets only on request taking the operating statuses and the desired capillary length into consideration

Control range and probe table — gas-filled

Control / limit value ranges °C	Hysteresis %	max. probe temperature °C	max. switch head temperature °C	possible capillary lengths in m	max. sequential gap *K*	Probe length dimension "L" in mm, Probe Ø "d" in mm Ø "6" = Standard	
						ø 6	ø 8
+20 to +400	6 10	+ 460 + 500	+ 80 + 80	5	75 200	237 127	137 81
+20 to +500	3 / 5 6 10	+ 530 + 575 + 575	+ 80 + 80 + 80	1 5 5	48 95 250	278 176 95	158 106 65

Capillary and temperature probe

Type	Scale limit value	Capillary	Temperature probe	Remarks
AMTHF	up to 200 °C	Copper (Cu), ø 1.5mm Material No. Cu-DHP	Copper (Cu), Material No. Cu-DHP hard soldered	–
	up to 350 °C	Copper (Cu), ø 1.5mm Material No. Cu-DHP	Stainless steel (CrNi), Material No. 1.4571 hard soldered	–
	up to 500 °C	Stainless steel (CrNi), ø 1.5mm	Stainless steel (CrNi), Material No. 1.4571 welded	–
	up to 350 °C	Stainless steel (CrNi), ø 1.5mm	Stainless steel (CrNi), Material No. 1.4571 welded	against surcharge
Capillary length	1000 mm, max. 5000 mm as standard			
min. bending radius of the capillary	5 mm			

Note: If the max. admissible temperature is not reached on the probe, capillary and switching head, it is possible to increase the capillary length, where it is limited to 1, 2 or 3 m as per the control range and probe table, on request. Please specify the temperature values occurring on the thermostats.

JUMO GmbH & Co. KG
Delivery address: Mackenrodtstraße 14
36039 Fulda, Germany
Postal address: 36035 Fulda, Germany
Phone: +49 661 6003-0
Fax: +49 661 6003-607
E-mail: mail@jumo.net
Internet: www.jumo.net

JUMO Instrument Co. Ltd.
JUMO House
Temple Bank, Riverway
Harlow, Essex CM20 2DY, UK
Phone: +44 1279 635533
Fax: +44 1279 635262
E-mail: sales@jumo.co.uk
Internet: www.jumo.co.uk

JUMO Process Control, Inc.
6733 Myers Road
East Syracuse, NY 13057, USA
Phone: 315-437-5866
1-800-554-5866
Fax: 315-437-5860
E-mail: info.us@jumo.net
Internet: www.jumousa.com

Electrical data

Switching element	2, 3 or 4 1-pole snap switch Microswitch with change-over contact		
max. contact rating	Hysteresis switching function	N/C contact, terminal 2	N/O contact, terminal 4
	TR, TW 2.5%, 5%, 6%, 7%, 10%	AC 230 V +10%, 16 (3) A, cos φ = 1(0.6) DC 230 V +10%, 0.25A	AC 230 V +10%, 8 (1.5) A, cos φ = 1(0.6) DC 230 V +10%, 0.25A
	TR, TW 1 %, 3 %	AC 230 V +10%, 6 (2) A, cos φ = 1(0.6) DC 230 V +10%, 0.25A	
Contact reliability	To ensure high switching reliability, we recommend a minimum load of: AC / DC = 24 V, 20 mA		
Rating surge voltage	1500 V (via the switching contacts 400 V)		
Overvoltage category	**II**		
Required fuse rating	see max. contact rating		
Electrical connection	Screw connection up to 2.5 mm^2 cable cross section		

Operating data

Hysteresis in % of the control / limit value range	Switching function	with fluid-filled measuring system		
		Rated value	Possible process value	
	TR, TW	2.5	2.5 max. 3.5	serial
		5	5 max. 6	on request
		7	7 max. 8	on request
		1	1 max. 2	Surcharge
		with gas-filled measuring system		
		5	5 max.11	serial
		6	6 max. 14	on request
		10	10 max. 16	on request
		3	2.5 max. 4	Surcharge
Sequential gap for multi-pin version	with hysteresis	Sequential gap from the scale range minimum	maximum	Switching point accuracy of the sequential gaps from the scale range
	1% 2.5% 3%, 5% 6%, 7%, 10%	1% 1% 2% 3%	as per control range table	≤ 1% ≤ 1% < 2% < 3%
	The sequential gap is specified in *K* in relation to the set point value of contact deck **I**.			
	Prefix **-** = switching **prior to** reaching the set point value, Prefix **+** = switching **after** reaching the set point value. Enter "0" for the sequential gap for a simultaneously switching version.			
Switching point accuracy in % of the control/limit value range	Switching function	Hysteresis fluid-filled	gas-filled	in the upper third of the scale or limit value
	TR	1 %, 2.5 % 5 % 7 %	- 3 %, 5 % 6 %, 10 %	±1.5 % ±3 % ±4 %
	TW	1 %, 2.5 % 5 % 7 %	- 3 %, 5 % 6 %, 10 %	±1.5 % ±3 % ±4 %

medium ambient temperature influence	When the ambient temperature on the switch head and/or the capillary deviates from the calibration temperature +22 °C, a switch point offset occurs. Higher ambient temperatures = lower switching point Lower ambient temperature = higher switching point							
	For temperatures with scale limit value / limit value							
	< 200 °C			÷ 200 °C ≤ +350 °C		÷ 400 °C ≤ +500 °C		
	TR, TW			TR, TW		TR, TW		
	Hysteresis in %							
	1 / 2.5	5	7	1 / 2.5	5	3 / 5	6	10
	Ambient temperature influence on the switch head in %/*K*							
	0.15	0.26	0.34	0.12	0.21	0.12	0.17	0.24
	Ambient temperature influence on the capillary in %/m							
	0.05 · K · m		0.09 · K · m	0.04 · K · m		0.05 · K · m		
	If the operating temperature on the switch head deviates essentially from the ambient calibration temperature +22 °C, this can be taken into account on request during adjustment against surcharge.							

JUMO GmbH & Co. KG
Delivery address: Mackenrodtstraße 14
36039 Fulda, Germany
Postal address: 36035 Fulda, Germany
Phone: +49 661 6003-0
Fax: +49 661 6003-607
E-mail: mail@jumo.net
Internet: www.jumo.net

JUMO Instrument Co. Ltd.
JUMO House
Temple Bank, Riverway
Harlow, Essex CM20 2DY, UK
Phone: +44 1279 635533
Fax: +44 1279 635262
E-mail: sales@jumo.co.uk
Internet: www.jumo.co.uk

JUMO Process Control, Inc.
6733 Myers Road
East Syracuse, NY 13057, USA
Phone: 315-437-5866
1-800-554-5866
Fax: 315-437-5860
E-mail: info.us@jumo.net
Internet: www.jumousa.com

Operating data

Permissible storage temperature	-50 to 50 °C
admissible ambient temperature during use	max. 80 °C
Rated position	as per DIN 16257, NL 0 to NL 90 (different rated positions on request)

Case

serial	Case lid: Polycarbonate, shock resistant Case bottom section: Die-cast aluminum, lacquered	Color: pebble gray RAL 7032 Color: anthracite gray RAL 7015
Set point adjustment	AMTHF.-1... Switching point adjustable from the outside using the rotary knob	AMTHF.-2... The switching point can be adjusted by means of a screwdriver once the case lid has been removed
Protection class	EN 60 529-IP 54	
Cable inlet	serial: self-sealing grommet M 20 × 1.5, sealing range 8-10 mm	
Weight	approx. 0.8 kg	
Switch head fastening, type series AMTHF**f** with capillary	serial	Screw-connection by means of counter nut M 18 × 1 on the case stud, capillary outlet on the case stud
	Extra code	
	711	with 2 screws through the case bottom section, lateral capillary outlet on the case, lid and bottom part made of plastic
	764	Fastening flange made of steel sheet, capillary outlet on the case stud
	248	Wall bracket

Process connection*

Type series AMTHF**s** with rigid shaft	Scale limit value up to 150 °C **Sheath "20“**	Scale limit value exceeding 150 °C **Sheath "30“**
	Screw-in sleeve with screw-in spigot G 1/2 form A as per DIN 3852/	Screw-in sleeve with screw-in journal G 1/2 form A as per DIN 3852/2 and intermediate piece, to ensure that the max. admissible ambient temperature of +80 °C is not exceeded on the case
Type series AMTHF**f** with capillary	**plain cylindrical probe "10"** (standard)	
	Screw-in sheath "20" (on request)	
	Screw-in sleeve with screw-in spigot G 1/2 form A as per DIN 3852/2 and clamping piece with locking screw to lock the probe	
Material	**Sheath "20“**	**Sheath "30“**
	up to +150 °C CuZn as a standard over +150°C CrNi	over +150 °C CrNi
Fitting length S	Standard lengths: 100, 120, 150, 200 or 300; different lengths on request	
Immersion tube Ø	D = 8 mm, D = 10 mm	

Note:
Physical and toxic features of the expansion means, which could occur in the event of a measuring system break.

Control range with scale limit value	Hazardous reactions	Fire and explosion hazard		hazardous to waters	Information about toxicology		
		Ignition temperature	Explosion limit		irritant	dangerous to health	toxic
< +200 °C	no	+ 355 °C	0.6 - 8 V%	Yes	Yes	[1]	no
≥ 200 °C ≤ +300 °C	no	+ 490 °C	- -	Yes	Yes	[1]	no
> 350 °C ≤ +500 °C	no	no	no	no	no	no	no

[1] There is currently no statement by the health authority concerning hazards to health in the event of short-term exposure and low concentration, e.g. measuring system break.

Approvals/approval marks

Approval marks	Inspection authority	Certificates/ inspection number	Inspection basis	Valid for
EAC	Gost Norm AG	on demand	Technical rules of the customs union Russia/Belarus/Kazakhstan	AMTHF

JUMO GmbH & Co. KG
Delivery address: Mackenrodtstraße 14
36039 Fulda, Germany
Postal address: 36035 Fulda, Germany
Phone: +49 661 6003-0
Fax: +49 661 6003-607
E-mail: mail@jumo.net
Internet: www.jumo.net

JUMO Instrument Co. Ltd.
JUMO House
Temple Bank, Riverway
Harlow, Essex CM20 2DY, UK
Phone: +44 1279 635533
Fax: +44 1279 635262
E-mail: sales@jumo.co.uk
Internet: www.jumo.co.uk

JUMO Process Control, Inc.
6733 Myers Road
East Syracuse, NY 13057, USA
Phone: 315-437-5866
1-800-554-5866
Fax: 315-437-5860
E-mail: info.us@jumo.net
Internet: www.jumousa.com

Connection diagrams

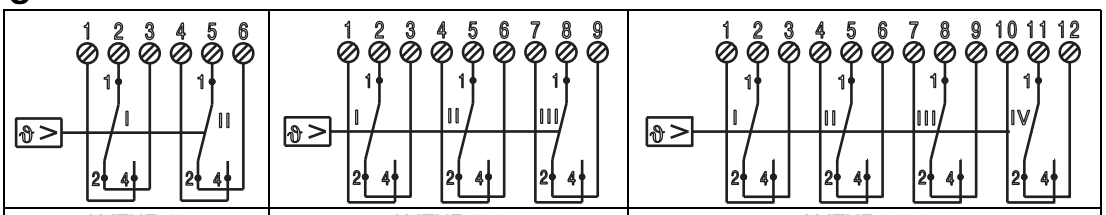

AMTHF-13 AMTHF-23	AMTHF-133 AMTHF-233	AMTHF-1333 AMTHF-2333

Dimensions

AMTHF**s**-1...
Process connection "20" with screw-in sheath

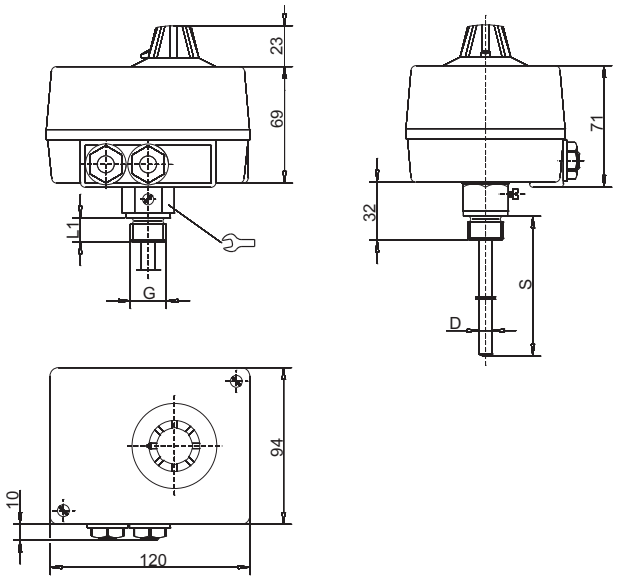

AMTHF**s**-2...
Process connection "30" with screw-in sheath and intermediate piece for scale value exceeding +150 °C

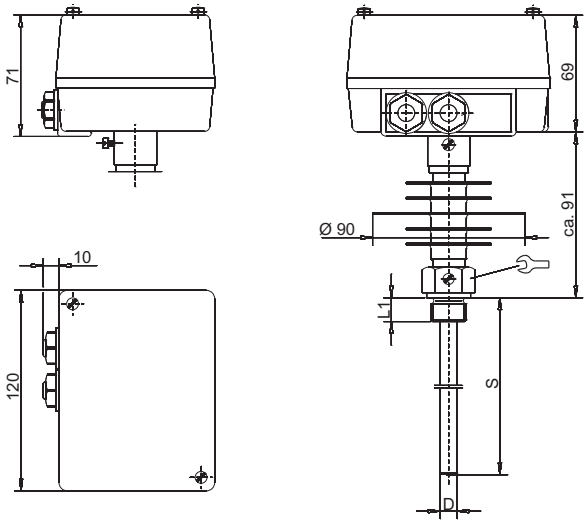

JUMO GmbH & Co. KG
Delivery address: Mackenrodtstraße 14
36039 Fulda, Germany
Postal address: 36035 Fulda, Germany
Phone: +49 661 6003-0
Fax: +49 661 6003-607
E-mail: mail@jumo.net
Internet: www.jumo.net

JUMO Instrument Co. Ltd.
JUMO House
Temple Bank, Riverway
Harlow, Essex CM20 2DY, UK
Phone: +44 1279 635533
Fax: +44 1279 635262
E-mail: sales@jumo.co.uk
Internet: www.jumo.co.uk

JUMO Process Control, Inc.
6733 Myers Road
East Syracuse, NY 13057, USA
Phone: 315-437-5866
1-800-554-5866
Fax: 315-437-5860
E-mail: info.us@jumo.net
Internet: www.jumousa.com

Dimensions

AMTHF**f**-1...
Process connection "10" plain cylindrical probe

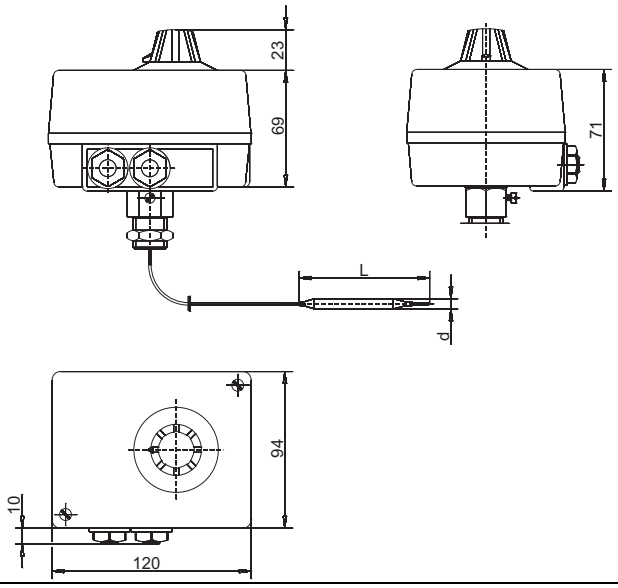

AMTHF**f**-2.../711
Capillary outlet lateral on the case, with plain cylindrical probe, process connection "10"

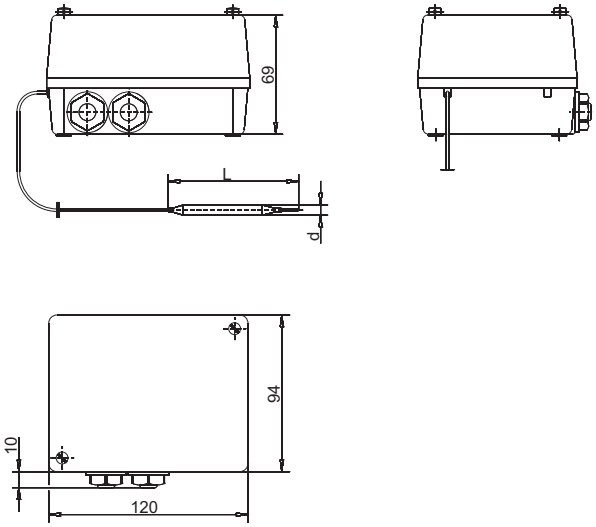

AMTHF**f**-2.../764
with "72" sheet steel flange with screw-in sheath "20"

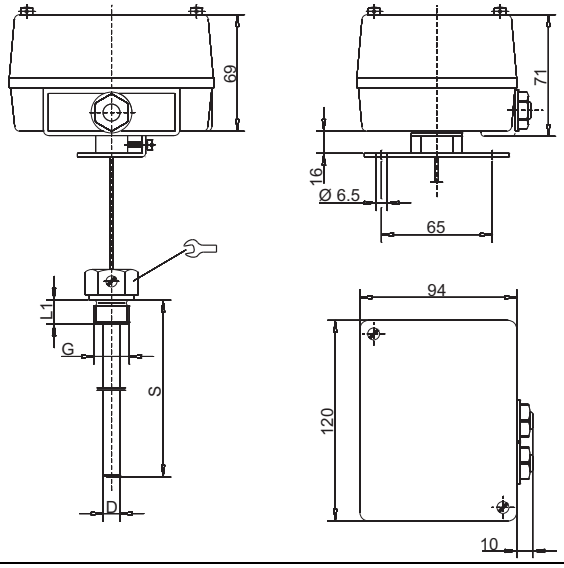

JUMO GmbH & Co. KG
Delivery address: Mackenrodtstraße 14
36039 Fulda, Germany
Postal address: 36035 Fulda, Germany
Phone: +49 661 6003-0
Fax: +49 661 6003-607
E-mail: mail@jumo.net
Internet: www.jumo.net

JUMO Instrument Co. Ltd.
JUMO House
Temple Bank, Riverway
Harlow, Essex CM20 2DY, UK
Phone: +44 1279 635533
Fax: +44 1279 635262
E-mail: sales@jumo.co.uk
Internet: www.jumo.co.uk

JUMO Process Control, Inc.
6733 Myers Road
East Syracuse, NY 13057, USA
Phone: 315-437-5866
1-800-554-5866
Fax: 315-437-5860
E-mail: info.us@jumo.net
Internet: www.jumousa.com

Dimensions

AMTHF**f**-1.../248
with "73" wall support
with screw-in sheath "20"

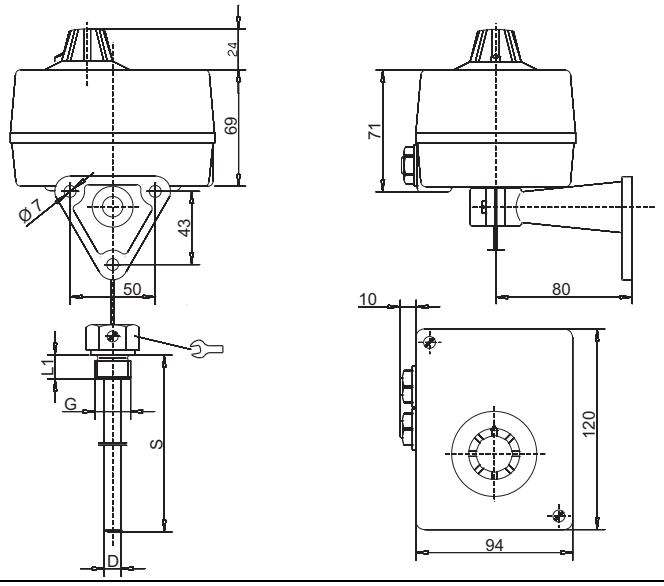

JUMO GmbH & Co. KG
Delivery address: Mackenrodtstraße 14
36039 Fulda, Germany
Postal address: 36035 Fulda, Germany
Phone: +49 661 6003-0
Fax: +49 661 6003-607
E-mail: mail@jumo.net
Internet: www.jumo.net

JUMO Instrument Co. Ltd.
JUMO House
Temple Bank, Riverway
Harlow, Essex CM20 2DY, UK
Phone: +44 1279 635533
Fax: +44 1279 635262
E-mail: sales@jumo.co.uk
Internet: www.jumo.co.uk

JUMO Process Control, Inc.
6733 Myers Road
East Syracuse, NY 13057, USA
Phone: 315-437-5866
1-800-554-5866
Fax: 315-437-5860
E-mail: info.us@jumo.net
Internet: www.jumousa.com

Order details

Surface-mounting thermostats, type series AMTHF

Order code				
	(1)	**Basic type**		
603051		Surface-mounting thermostat, type series AMTHF with 2, 3 or 4 1-pole snap switches		
	(2)	**Basic type extension (function)**		
0013		AMTHF.-13	Temperature controller	2-pin
0023		AMTHF.-23	Temperature monitor	2-pin
0133		AMTHF.-133	Temperature controller	3-pin
0233		AMTHF.-233	Temperature monitor	3-pin
1333		AMTHF.-1333	Temperature controller	4-pin
2333		AMTHF.-2333	Temperature monitor	4-pin
	(3)	**Design**		
1		AMTHF **s**	with rigid shaft	
2		AMTHF **f**	with capillary	
	(4)	**Control / limit value ranges**		
013		-20 to + 40 °C		
021		0 to + 50 °C		
041		+20 to + 90 °C		
025		0 to +100 °C		
052		+30 to +110 °C		
027		0 to +150 °C		
028		0 to +200 °C		
062		+50 to +200 °C		
063		+50 to +250 °C		
064		+50 to +300 °C		
045		+20 to +400 °C		
046		+20 to +500 °C		
	(5)	**Hysteresis**		
10		1 %		
25		2.5 %	of the scale range	with fluid-filled measuring systems
50		5 %		
70		7 %		
30		3 %		
50		5 %	of the scale range	with gas-filled measuring systems
60		6 %		
01		10 %		
	(6)	**Capillary length** (specifications in mm)		
0		AMTHF**s** without capillary		
1000		1000 mm		
2000		2000 mm		
3000		3000 mm		
4000		4000 mm		
5000		5000 mm		
. . . .		(Special length, specifications in plain text)		
	(7)	**Capillary material**		
00		AMTHF**s** without capillary		
40		Cu (Copper)		
20		CrNi (stainless steel)		

JUMO GmbH & Co. KG
Delivery address: Mackenrodtstraße 14
36039 Fulda, Germany
Postal address: 36035 Fulda, Germany
Phone: +49 661 6003-0
Fax: +49 661 6003-607
E-mail: mail@jumo.net
Internet: www.jumo.net

JUMO Instrument Co. Ltd.
JUMO House
Temple Bank, Riverway
Harlow, Essex CM20 2DY, UK
Phone: +44 1279 635533
Fax: +44 1279 635262
E-mail: sales@jumo.co.uk
Internet: www.jumo.co.uk

JUMO Process Control, Inc.
6733 Myers Road
East Syracuse, NY 13057, USA
Phone: 315-437-5866
1-800-554-5866
Fax: 315-437-5860
E-mail: info.us@jumo.net
Internet: www.jumousa.com

Order details

Surface-mounting thermostats, type series AMTHF

Order code		
	(8)	**Process connection***
10		plain cylindrical probe (only for AM.**f**)
20		Screw-in sheath
30		Screw-in sheath with intermediate piece 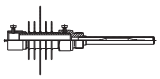
	(9)	**Thread of process connection***
00		without thread (process connection "10")
13		External thread G 1/2
	(10)	**Material of process connection**
00		only with process connection "10"
46		CuZn (Brass)
20		CrNi (Stainless steel 1.4571)
	(11)	**Fitting length "S“ (immersion tube length)**
000		AMTHF**f** without sheath
100		100 mm
120		120 mm
150		150 mm
200		200 mm
300		300 mm
400		400 mm
. . . .		(Special length, specifications in plain text)
	(12)	**Diameter "D" (immersion tube diameter)**
00		AMTHF**f** without sheath
8		8 mm
10		10 mm
	(13)	**Diameter "d" (probe diameter)**
6		6 mm
8		8 mm
	(14)	**Extra codes**
000		no extra code
711		Switch head fastening with 2 screws through the case bottom section, lateral capillary outlet on the case, lid and bottom part made of plastic
764		Fastening flange made of steel sheet, capillary outlet on the case stud
248		Wall bracket

* For different connection types and sheaths, please refer to data sheet 606710.

Sequential gap for 2-, 3- and 4-pin devices: Please specify in plain text (e.g. +2K, +5K, +8K)

Order code:

(1)		(2)		(3)		(4)		(5)		(6)		(7)		(8)		(9)		(10)		(11)		(12)		(13)		(14)	
603051	/	. . . .	-	.	-	. . .	-	. .	-	. . . .	-	. .	-	. .	-	. .	-	. .	-	. . .	-	. .	-	. .	/	. . .	,

Order example:

603051	/	0133	-	2	-	025	-	25	-	2000	-	40	-	10	-	00	-	00	-	000	-	00	-	6	/	248	

Sequential gap: _____

JUMO GmbH & Co. KG
Delivery address: Mackenrodtstraße 14
36039 Fulda, Germany
Postal address: 36035 Fulda, Germany
Phone: +49 661 6003-0
Fax: +49 661 6003-607
E-mail: mail@jumo.net
Internet: www.jumo.net

JUMO Instrument Co. Ltd.
JUMO House
Temple Bank, Riverway
Harlow, Essex CM20 2DY, UK
Phone: +44 1279 635533
Fax: +44 1279 635262
E-mail: sales@jumo.co.uk
Internet: www.jumo.co.uk

JUMO Process Control, Inc.
6733 Myers Road
East Syracuse, NY 13057, USA
Phone: 315-437-5866
1-800-554-5866
Fax: 315-437-5860
E-mail: info.us@jumo.net
Internet: www.jumousa.com

JUMO heatTHERM-AT and JUMO heatTHERM-DR

Type 603070, Surface-Mounted or Room Thermostat Versions

Type 603070/0170 (TR/STB)

Type 603070/0001 (TR)

Type 603070/ 0002 (TW)

Type 603070/0002 (TW)

Special features

- PUSH IN-connection technology - **reduced installation time by 50 %**
- Stable switching point position due to ambient temperature compensation (standard)
- Max. switching capacity 16 A, 230 V
- Tested according to DIN EN 14597
- Operating life at least 250,000 switching cycles for TR and TW
- Switching point deviation during the entire operating life of up to ± 5 %
- Protection type max. IP54
- UL approval (extra code 061)

Brief description

High application flexibility and the latest connection technology are the essential equipment features of this new thermostat series.

The thermostat case is suitable for all common installation types such as wall mounting, immersion sleeve, and contact fastening. It can be used universally and reduces the variant range because different mounting types must no longer be taken into account.

The JUMO heatTHERM-DR (type 7+8) type is a specific variation with a special housing bottom section for DIN rail or wall mounting. As a result, easy mounting on mounting rails TH35 according to DIN EN 60715 (e.g. in control cabinets) is possible. This variant considerably reduces the mounting time. The flue gas automatic reset temperature limiter JUMO heatTHERM-AT locks the gas/oil vessel that is connected in parallel with the wood vessel to a chimney.

For these international innovative surface-mounted thermostats with "Push-In®" terminal technology, the connection wires are only inserted into the terminal point up to the stop - that's it! No tool is required for connecting the wire or strand with a ferrule and the wiring becomes safer. In this manner, the costs and time required for connection are considerably reduced compared to the conventional screw terminal.

The "Push-In®" terminal technology allows direct switching of loads up to 16 A at 230 V AC. The installation costs can be reduced further because a load contactor is no longer required.

Available are temperature controllers (TR), temperature monitors (TW), safety temperature monitors (STW), safety temperature limiters (STB) as single or double thermostats, and flue gas temperature monitors (ATW).

Approvals according to DIN EN 14597, DGRL, and UL indicate the high quality standards for this product series.

Approvals/approval marks (see "Technical Data")

Design type 5+6* Design type 7+8*

* Only with extra code 061

JUMO GmbH & Co. KG
Delivery address: Mackenrodtstraße 14
36039 Fulda, Germany
Postal address: 36035 Fulda, Germany
Phone: +49 661 6003-0
Fax: +49 661 6003-607
E-mail: mail@jumo.net
Internet: www.jumo.net

JUMO Instrument Co. Ltd.
JUMO House
Temple Bank, Riverway
Harlow, Essex CM20 2DY, UK
Phone: +44 1279 635533
Fax: +44 1279 635262
E-mail: sales@jumo.co.uk
Internet: www.jumo.co.uk

JUMO Process Control, Inc.
6733 Myers Road
East Syracuse, NY 13057, USA
Phone: 315-437-5866
1-800-554-5866
Fax: 315-437-5860
E-mail: info.us@jumo.net
Internet: www.jumousa.com

Technical data

Switching function

Temperature controller TR / temperature monitor TW	If the temperature on the temperature probe exceeds the setpoint value, the microswitch is activated by the transmission mechanics and the electrical circuit is opened or closed. If the temperature falls below the selected setpoint value (by the amount of the switching differential), the microswitch is reset to its initial position.
Safety temperature monitor STW	If the temperature on the temperature probe exceeds the setpoint value, the snap-action switch is activated and the electrical circuit is opened or closed. If the temperature falls below the selected setpoint value (by the amount of the switching differential), the snap-action switch is reset to its initial position. The electrical circuit 1-2 opens when the probe of STW (STB) and STB cools down to the negative temperature range, but it closes again automatically if the temperature rises. If the measuring system is destroyed (i.e. if the expansion fluid emerges) the pressure in the diaphragm drops and permanently opens the electrical circuit.
Safety temperature limiter STB	If the temperature on the temperature probe exceeds the switching point, the snap-action switch is activated, the electrical circuit is opened or closed, and the snap-action switch is mechanically locked. The unlocking difference depends on the control range. Exact values are available from the respective types. They are also available upon request. If the temperature falls below the selected setpoint value (by the amount of the unlocking difference) then the snap-action switch can be manually unlocked again. The electrical circuit 1-2 opens when the probe of STW (STB) and STB cools down to the negative temperature range, but it closes again automatically if the temperature rises. If the measuring system is destroyed (i.e. if the expansion fluid emerges) the pressure in the diaphragm drops and permanently opens the electrical circuit. Unlocking is no longer possible.

Temperature compensation

When the ambient temperature on the switching head and the capillary deviates — from the calibration ambient temperature of +22 °C — a switching point offset occurs. This switching point offset is reduced to a minimum due to the temperature compensation.

JUMO GmbH & Co. KG
Delivery address: Mackenrodtstraße 14
36039 Fulda, Germany
Postal address: 36035 Fulda, Germany
Phone: +49 661 6003-0
Fax: +49 661 6003-607
E-mail: mail@jumo.net
Internet: www.jumo.net

JUMO Instrument Co. Ltd.
JUMO House
Temple Bank, Riverway
Harlow, Essex CM20 2DY, UK
Phone: +44 1279 635533
Fax: +44 1279 635262
E-mail: sales@jumo.co.uk
Internet: www.jumo.co.uk

JUMO Process Control, Inc.
6733 Myers Road
East Syracuse, NY 13057, USA
Phone: 315-437-5866
1-800-554-5866
Fax: 315-437-5860
E-mail: info.us@jumo.net
Internet: www.jumousa.com

Technical data

Case

	Type 5 + 6	Type 7 + 8
Case	Case bottom section:	PA (reinforced)
	Color:	Silver-gray RAL 7001 (for TZ 061 black)
	Case lid: ABS with inspection glass (PMMA) Color: cobalt-blue RAL 5013 (for TZ 061 light-gray, RAL 7035)	
Setpoint adjustment		
TR	Switching point can be adjusted externally with the rotary knob.	- -
TW, STW, STB, ATW	Switching point can be adjusted with a screwdriver once the case lid has been removed. The set switching point can be checked through the inspection glass.	Switching point can adjusted with a screwdriver.
Protection type	IP40 or IP54 (for TZ 402) according to EN 60 529	IP20 according to EN 60 529
Cable inlet	Cable gland M20 x 1.5, for cable-∅ 6-12 mm	Cable connection directly on PUSH IN terminals
Capillary	∅ 1.25 mm - min. bending radius of the capillary 5 mm - material: copper (Cu) or stainless steel (CrNi, 1.4301)	
Case fastening	Pipe mounting with clamping belt for pipe diameter 15-100 mm, thermowell mounting, wall mounting	Wall mounting, DIN rail installation TH35 according to DIN EN 60715
Weight	Approx. 0.2 kg	

Electrical data

Electric contact	Snap-action switch with single-pole changeover contact	
Switching capacity	TR / TW / STW / ATW	STB
	On the N/C contact (contact deck 1-2): AC 230 V +10 %, 16 (2.5) A, cos φ = 1 (0.6), DC 230 V +10 %, 0.25 A On the N/O contact (contact deck 1-4): AC 230 V +10 %, 6.3 (2.5) A, cos φ = 1 (0.6), DC 230 V +10 %, 0.25 A	On the N/C contact (contact deck 1-2): AC 230 V +10 %, 16 (2.5) A, cos φ = 1 (0.6), DC 230 V +10 %, 0.25 A On the signal contact (contact deck 1-4): AC 230 V +10 %, 2 (04) A, cos φ = 1 (0.6), DC 230 V +10 %, 0.25 A
Electrical connection	PUSH IN contact (plug-type terminal) "Push-In®" terminal technology: patented connection technology by Weidmüller GmbH & Co. KG, Detmold, Germany	
Connection cross section	0.75 to 2.5 mm^2 fine wired (single-wire, fine wired with ferrule)	
Switching reliability	To ensure the greatest possible switching reliability, we recommend a minimum load of: AC / DC = 24 V, 100 mA for silver contacts AC / DC = 10 V, 5 mA for gold-plated contacts (TZ 702)	

JUMO GmbH & Co. KG
Delivery address: Mackenrodtstraße 14
36039 Fulda, Germany
Postal address: 36035 Fulda, Germany
Phone: +49 661 6003-0
Fax: +49 661 6003-607
E-mail: mail@jumo.net
Internet: www.jumo.net

JUMO Instrument Co. Ltd.
JUMO House
Temple Bank, Riverway
Harlow, Essex CM20 2DY, UK
Phone: +44 1279 635533
Fax: +44 1279 635262
E-mail: sales@jumo.co.uk
Internet: www.jumo.co.uk

JUMO Process Control, Inc.
6733 Myers Road
East Syracuse, NY 13057, USA
Phone: 315-437-5866
1-800-554-5866
Fax: 315-437-5860
E-mail: info.us@jumo.net
Internet: www.jumousa.com

Operating data

Switching point accuracy	TR, TW	STW, STB with a setting range of:			
		+20 °C to +80 °C		+70 °C to +130 °C	
	Switching differential 2.5%	In the "first half" (+20 °C to +50 °C)	In the "second half" (+50 °C to +80 °C)	In the "first half" (+70 °C to +100 °C)	In the "second half" (+100 °C to +130 °C)
	In the upper third of the scale ± 3 %, at scale beginning ± 6 %	+0/-8 K	+0/-5 K	+0/-12 K	+0/-5 K
Temperature compensation	When the ambient temperature on the switching head and the capillary deviates — from the calibration ambient temperature of +22 °C — a switching point offset of approx. -0.1 K/K occurs (switching point change referring to the ambient temperature change, measured at limit value +120 °C permanently set and capillary length 2,000 mm). This switching point offset is reduced to a minimum due to the standard temperature compensation.				
Limit value temperatures	For transport and storage: - 30 °C to (see maximum temperatures during operation)				
	During use: 0 °C to +80 °C, for TZ 061 UL approval max. +65 °C (type 7 max. 55 °C; type 6+8 max. +50 °C)				
	For pipe mounting: max. pipe temperature +120 °C				
Rated position	According to DIN 16257, rated position 0 to rated position 90 (different rated positions upon request)				

Approvals/approval marks

Approval marks	**Inspection authority**	**Certificates/certification number**	**Inspection basis**	**Valid for**
DIN	DIN CERTCO	TR1191, TW1192, STW(STB)1193, STB1194, ATW1218	DIN EN 14597	JUMO heatTHERM-AT/-DR according to type
DIN	TÜV Süd (German Technical Inspection Agency)	DIN EN ISO 13849-1	B_{10d} = 250,000[a]	JUMO heatTHERM-AT/-DR
PED	TÜV Süd	Z-IS-TAF-MUC-18-05-2652099-02162623	2014/68/EU	JUMO heatTHERM (STW(STB)/STB)
UL	UL Germany	E 66358	UL 873	JUMO heatTHERM-AT/-DR
EAC[b]	Gost Norm AG	TC RU C-DE.AB98.B.00348	Technical rules of the customs union Russia/Belarus/Kazakhstan	JUMO heatTHERM-AT/-DR

[a] For further details see: Safety manual JUMO heatTHERM (-AT), (-DR) 602031, 603070.
Contact rating check conducted at 16 A, 230 V, resistive load.

[b] Russian documentation upon request

Wiring diagrams

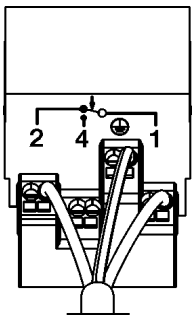

TR, TW, STW

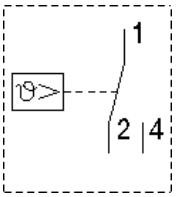

STB

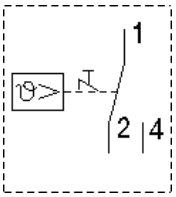

JUMO GmbH & Co. KG
Delivery address: Mackenrodtstraße 14
36039 Fulda, Germany
Postal address: 36035 Fulda, Germany
Phone: +49 661 6003-0
Fax: +49 661 6003-607
E-mail: mail@jumo.net
Internet: www.jumo.net

JUMO Instrument Co. Ltd.
JUMO House
Temple Bank, Riverway
Harlow, Essex CM20 2DY, UK
Phone: +44 1279 635533
Fax: +44 1279 635262
E-mail: sales@jumo.co.uk
Internet: www.jumo.co.uk

JUMO Process Control, Inc.
6733 Myers Road
East Syracuse, NY 13057, USA
Phone: 315-437-5866
1-800-554-5866
Fax: 315-437-5860
E-mail: info.us@jumo.net
Internet: www.jumousa.com

Devices in stock: JUMO heatTHERM-AT

Temperature controller TR, type 5

Type 603070/0001[a]

- Protection type IP54
- Compensation of the ambient temperature
- Individual limitation of the control range

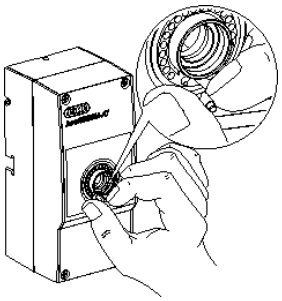

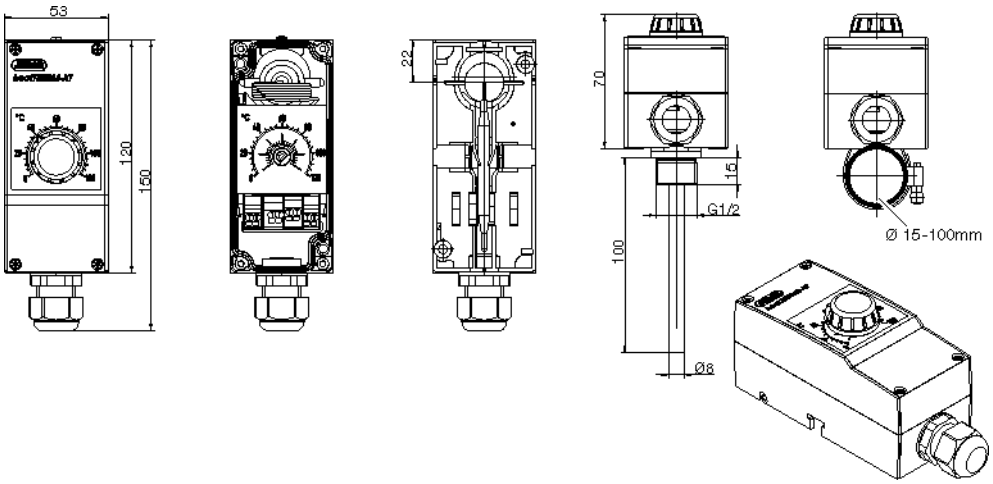

Part no.	Type	Control range °C	Capillary mm	Probe–∅ (d) × L mm	Switching differential	Process connection
60003185	JUMO heatTHERM-AT/ 0001	0 to +120	2000	6 × 87	Approx. 3 K	With internal capillary and contact probe
60003186						Thermowell U 4, brass nickel-plated

[a] Further design versions (control range, switching differential, process connection) upon request - minimum order quantity 100 pieces. Thermowells page 15.

Temperature monitor TW

Type 603070/0002[a]

- Protection type IP54
- Compensation of the ambient temperature
- Switching value check through inspection window in the case lid
- UL approval (extra code 061)

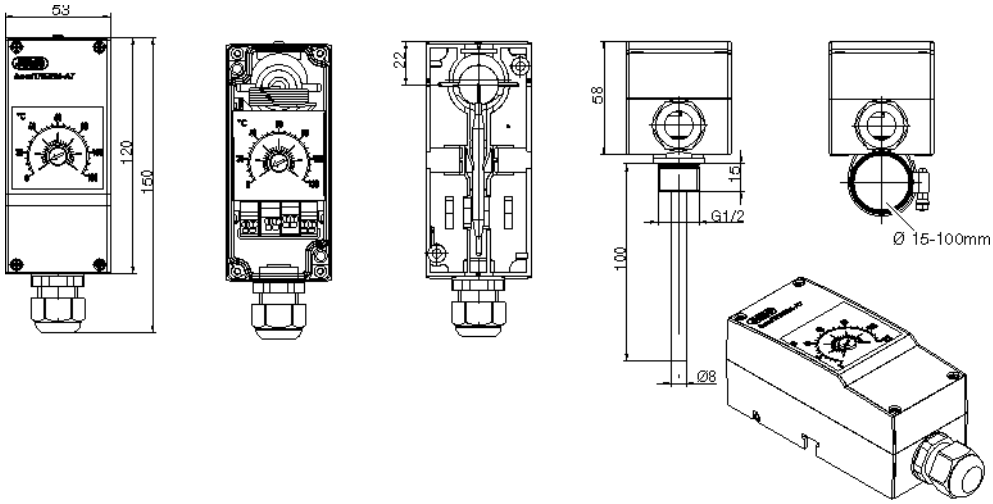

Part no.	Type	Control range °C	Capillary mm	Probe–∅ (d) × L mm	Switching differential	Process connection
60003187	JUMO heatTHERM-AT/ 0002	0 to +120	2000	6 × 87	Approx. 3 K	With internal capillary and contact probe
60003441[b]						
60003188						Thermowell U 4, brass nickel-plated
60003440[b]		0 to +200		6 × 78	Approx. 5 K	With internal capillary and contact probe

[a] Further design versions (control range, switching differential, process connection) upon request - minimum order quantity 100 pieces. Thermowells page 15.
[b] UL approval (extra code 061) page 14.

JUMO GmbH & Co. KG
Delivery address: Mackenrodtstraße 14
36039 Fulda, Germany
Postal address: 36035 Fulda, Germany
Phone: +49 661 6003-0
Fax: +49 661 6003-607
E-mail: mail@jumo.net
Internet: www.jumo.net

JUMO Instrument Co. Ltd.
JUMO House
Temple Bank, Riverway
Harlow, Essex CM20 2DY, UK
Phone: +44 1279 635533
Fax: +44 1279 635262
E-mail: sales@jumo.co.uk
Internet: www.jumo.co.uk

JUMO Process Control, Inc.
6733 Myers Road
East Syracuse, NY 13057, USA
Phone: 315-437-5866
1-800-554-5866
Fax: 315-437-5860
E-mail: info.us@jumo.net
Internet: www.jumousa.com

Devices in stock: JUMO heatTHERM-AT

Safety temperature monitor STW, type 5

Type 603070/0020[a]

- Protection type IP54
- Switching value check through inspection window in the case lid
- Compensation of the ambient temperature
- Capillary break protection

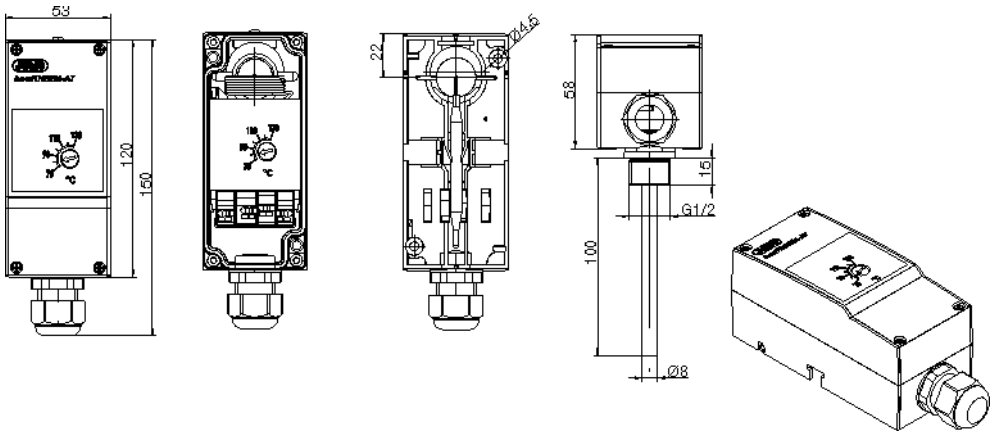

Part no.	Type	Control range °C	Capillary mm	Probe–Ø (d) × L mm	Switching differential	Process connection
60003229	JUMO heatTHERM-AT/ 0020	+20 to +80	2000	6 x 66	Approx. 10 K	With internal capillary and contact probe
60003189		+70 to +130		6 x 66		Thermowell U 4, brass nickel-plated

[a] Further design versions (control range, switching differential, process connection) upon request - minimum order quantity 100 pieces. Thermowells page 15.

Safety temperature limiter STB, type 5

Type 603070/0070[a]

- Protection type IP54
- Switching value check through inspection window in the case lid
- External acknowledgement of the switching point is possible
- Compensation of the ambient temperature
- Capillary break protection
- UL approval (extra code 061)

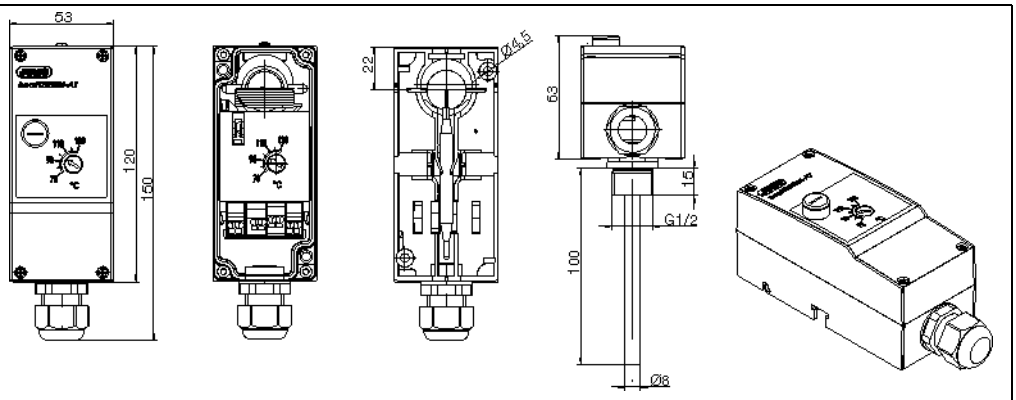

Part no.	Type	Control range °C	Capillary mm	Probe–Ø (d) × L mm	Unlocking difference	Process connection
60003230	JUMO heatTHERM-AT/ 0070	+70 to +130	2000	6 x 66	Approx. 10 K	With internal capillary and contact probe
60003190						Thermowell U 4, brass nickel-plated
60003442[b]		+50 to +300		6 x 85	Approx. 25 K	With internal capillary and contact probe
60003443[b]		+20 to +150		6 x 66	Approx. 15 K	

[a] Further design versions (control range, switching differential, process connection) upon request - minimum order quantity 100 pieces. Thermowells page 15.
[b] UL approval (extra code 061) page 14.

JUMO GmbH & Co. KG
Delivery address: Mackenrodtstraße 14
36039 Fulda, Germany
Postal address: 36035 Fulda, Germany
Phone: +49 661 6003-0
Fax: +49 661 6003-607
E-mail: mail@jumo.net
Internet: www.jumo.net

JUMO Instrument Co. Ltd.
JUMO House
Temple Bank, Riverway
Harlow, Essex CM20 2DY, UK
Phone: +44 1279 635533
Fax: +44 1279 635262
E-mail: sales@jumo.co.uk
Internet: www.jumo.co.uk

JUMO Process Control, Inc.
6733 Myers Road
East Syracuse, NY 13057, USA
Phone: 315-437-5866
1-800-554-5866
Fax: 315-437-5860
E-mail: info.us@jumo.net
Internet: www.jumousa.com

Devices in stock: JUMO heatTHERM-AT

Room thermostat temperature controller TR, type 6

Type 603070/0001[a]

- Protection type IP54
- Wall mounting
- Individual limitation of the control range

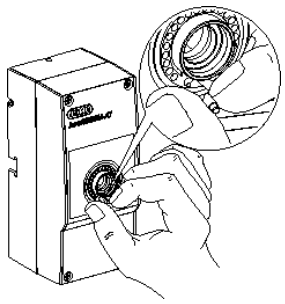

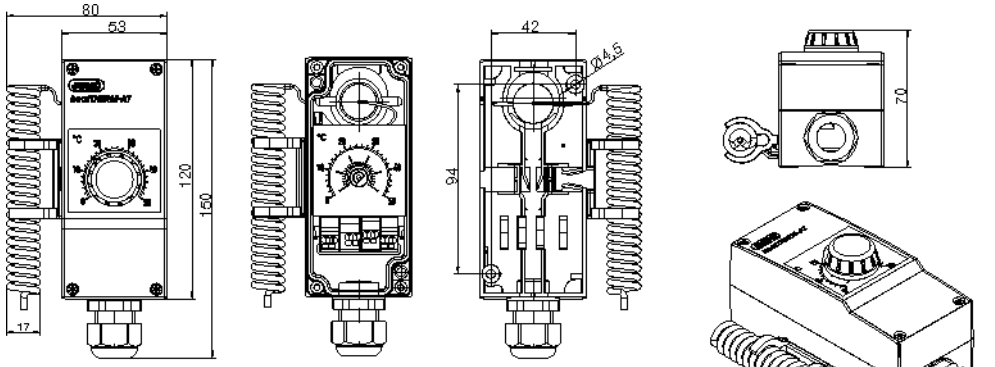

Part no.	Type	Control range °C	Capillary mm	Probe–∅ (d) × L mm	Switching differential	Process connection
60003191	JUMO heatTHERM-AT/ 0001	-10 to +40	- -	- -	1.5 - 2 K	Spiral probe
60003192		0 to +50				

[a] Further design versions (control range, switching differential, process connection) upon request - minimum order quantity 100 pieces. Thermowells page 15.

Room thermostat temperature limiter TW, type 6

Type 603070/0002[a]

- Protection type IP54
- Wall mounting
- Switching value check through inspection window in the case lid

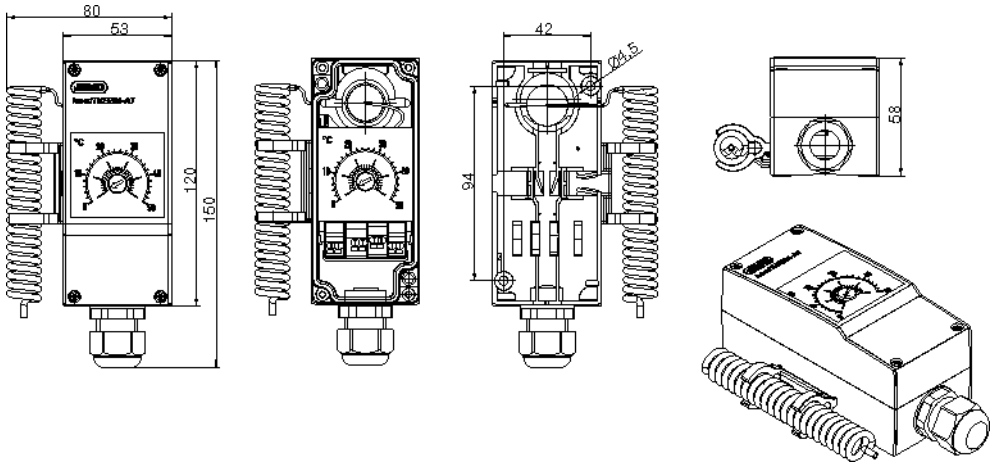

Part no.	Type	Control range °C	Capillary mm	Probe–∅ (d) × L mm	Switching differential	Process connection
60003193	JUMO heatTHERM-AT/ 0002	-10 to +40	- -	- -	1.5 - 2 K	Spiral probe
60003194		0 to +50				

[a] Further design versions (control range, switching differential, process connection) upon request - minimum order quantity 100 pieces. Thermowells page 15.

JUMO GmbH & Co. KG
Delivery address: Mackenrodtstraße 14
36039 Fulda, Germany
Postal address: 36035 Fulda, Germany
Phone: +49 661 6003-0
Fax: +49 661 6003-607
E-mail: mail@jumo.net
Internet: www.jumo.net

JUMO Instrument Co. Ltd.
JUMO House
Temple Bank, Riverway
Harlow, Essex CM20 2DY, UK
Phone: +44 1279 635533
Fax: +44 1279 635262
E-mail: sales@jumo.co.uk
Internet: www.jumo.co.uk

JUMO Process Control, Inc.
6733 Myers Road
East Syracuse, NY 13057, USA
Phone: 315-437-5866
1-800-554-5866
Fax: 315-437-5860
E-mail: info.us@jumo.net
Internet: www.jumousa.com

Devices in stock: JUMO heatTHERM-AT

Temperature controller / safety temperature monitor TR/STW, type 5

Type 603070/0120[a]

- Protection type IP54
- Switching value check through inspection window in the case lid
- Compensation of the ambient temperature
- Capillary break protection for STW

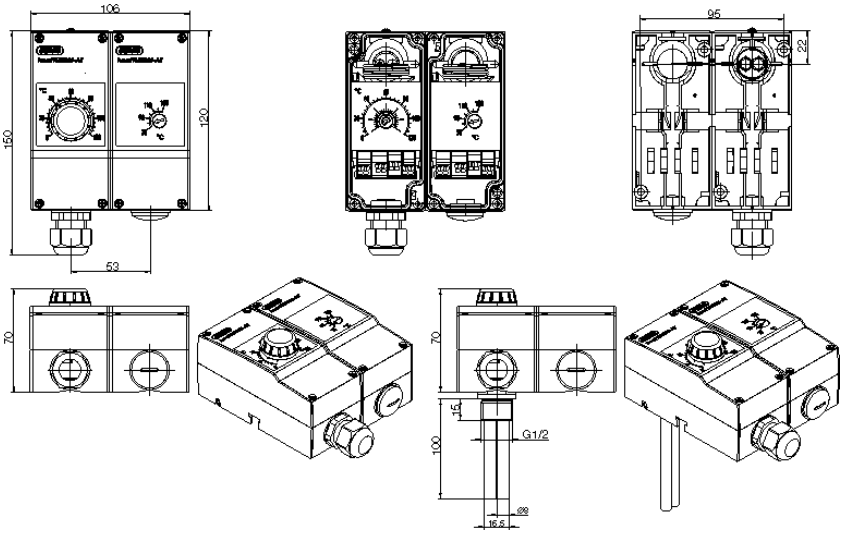

Part no.	Type	Control range °C	Capillary mm	Probe–∅ (d) × L mm	Switching differential	Process connection
60003195	JUMO heatTHERM-AT/ 0120	**TR:** 0 to +120	2000	6 × 87	Approx. 3 K	With internal capillary and contact probe
		STW: 70 to +130		6 x 66	Approx. 10 K	
60003231		**TR:** 0 to +120		6 × 87	Approx. 3 K	Thermowell; brass nickel-plated
		STW: 70 to +130		6 x 66	Approx. 10 K	

[a] Further design versions (control range, switching differential, process connection) upon request - minimum order quantity 100 pieces. Thermowells page 15.

Temperature controller / safety temperature limiter TR/STB, type 5

Type 603070/0170[a]

- Protection type IP54
- Switching value check through inspection window in the case lid
- Compensation of the ambient temperature
- Capillary break protection for STW

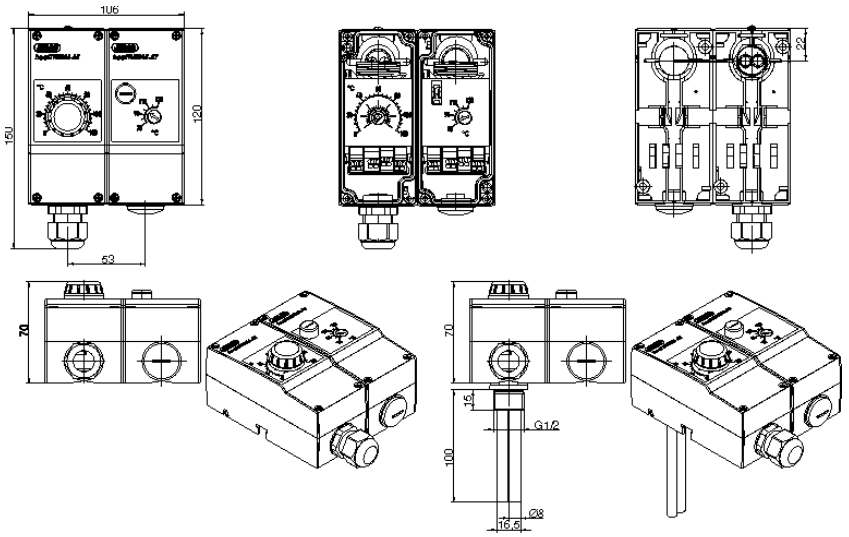

Part no.	Type	Control range °C	Capillary mm	Probe–∅ (d) × L mm	Switching differential/ unlocking difference	Process connection
60003196	JUMO heatTHERM-AT/ 0170	**TR:** 0 to +120	2000	6 × 87	Approx. 3 K	With internal capillary and contact probe
		STB: 70 to +130		6 x 66	Approx. 10 K	
60003232		**TR:** 0 to +120		6 × 87	Approx. 3 K	Thermowell; brass nickel-plated
		STB: 70 to +130		6 x 66	Approx. 10 K	

[a] Further design versions (control range, switching differential, process connection) upon request - minimum order quantity 100 pieces. Thermowells page 15.

JUMO GmbH & Co. KG
Delivery address: Mackenrodtstraße 14
36039 Fulda, Germany
Postal address: 36035 Fulda, Germany
Phone: +49 661 6003-0
Fax: +49 661 6003-607
E-mail: mail@jumo.net
Internet: www.jumo.net

JUMO Instrument Co. Ltd.
JUMO House
Temple Bank, Riverway
Harlow, Essex CM20 2DY, UK
Phone: +44 1279 635533
Fax: +44 1279 635262
E-mail: sales@jumo.co.uk
Internet: www.jumo.co.uk

JUMO Process Control, Inc.
6733 Myers Road
East Syracuse, NY 13057, USA
Phone: 315-437-5866
1-800-554-5866
Fax: 315-437-5860
E-mail: info.us@jumo.net
Internet: www.jumousa.com

Devices in stock: JUMO heatTHERM-AT

Room thermostat temperature monitor / temperature monitor TW/TW, type 6

Type 603070/0202[a]

- Protection type IP54
- Wall mounting
- Switching value control through inspection window in the case lid

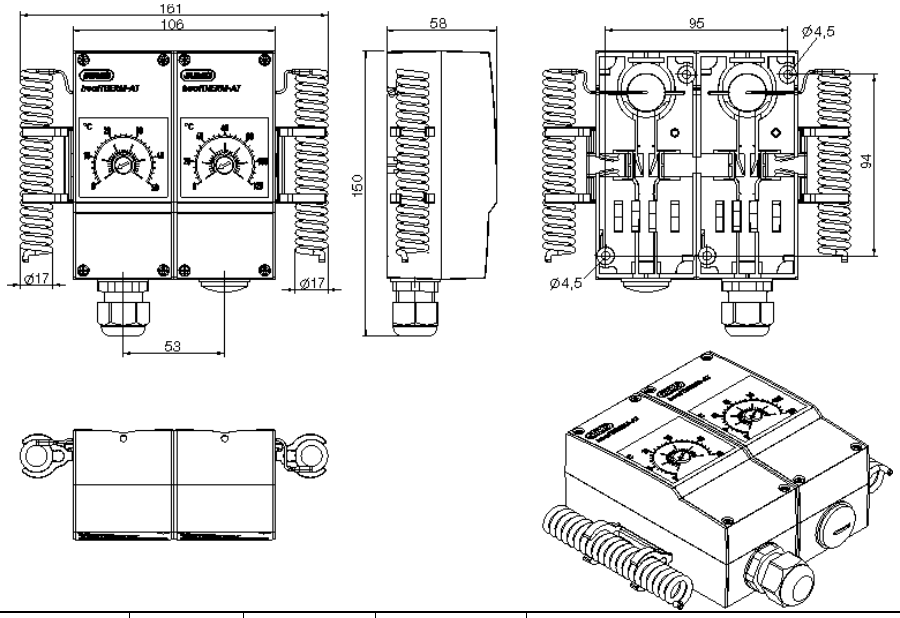

Part no.	Type	Control range °C	Capillary mm	Probe–∅ (d) × L mm	Switching differential	Process connection
60003212	JUMO heatTHERM-AT/ 0202	-10 to +40	- -	- -	1.5 - 2 K	Spiral probe
60003213		0 to +50				

[a] Further design versions (control range, switching differential, process connection) upon request - minimum order quantity 100 pieces. Thermowells page 15.

Flue gas temperature monitor with mounting sleeve, design 5

Type 603070/0020[a]

- Switching value check through inspection window in the case lid
- Max. allowable probe temperature +600 °C
- Approval as ATW with capillary break protection according to DIN EN 14597
- Time constant t0.632 ≤ 45 sec. in flue gas

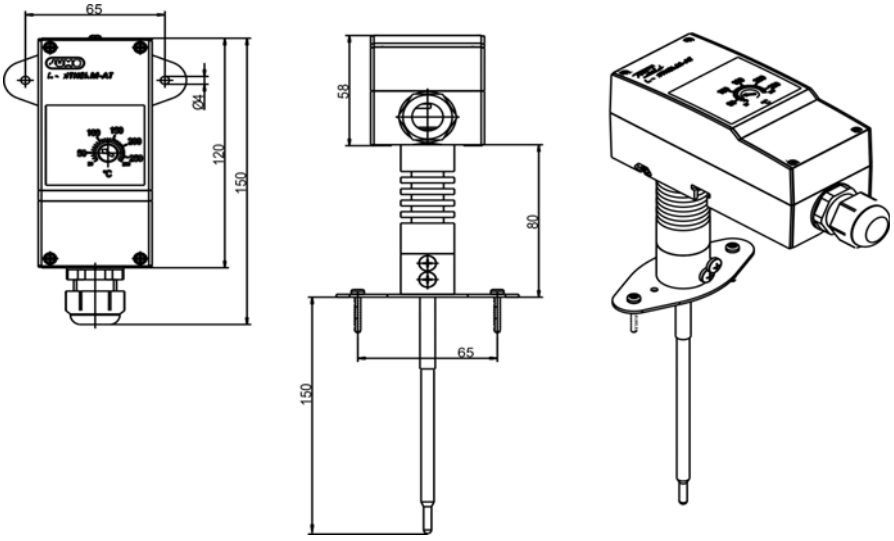

Part no.	Type	Control range °C	Capillary mm	Probe–∅ (d) × L mm	Switching differential	Process connection
60003390	JUMO heatTHERM-AT/ 0020	+20 to +280	- -	6 x 150 mm	Approx. 35 K	Intermediate piece with mounting flange

[a] Further design versions (control range, switching differential, process connection) upon request - minimum order quantity 100 pieces. Thermowells page 15.

JUMO GmbH & Co. KG
Delivery address: Mackenrodtstraße 14
36039 Fulda, Germany
Postal address: 36035 Fulda, Germany
Phone: +49 661 6003-0
Fax: +49 661 6003-607
E-mail: mail@jumo.net
Internet: www.jumo.net

JUMO Instrument Co. Ltd.
JUMO House
Temple Bank, Riverway
Harlow, Essex CM20 2DY, UK
Phone: +44 1279 635533
Fax: +44 1279 635262
E-mail: sales@jumo.co.uk
Internet: www.jumo.co.uk

JUMO Process Control, Inc.
6733 Myers Road
East Syracuse, NY 13057, USA
Phone: 315-437-5866
1-800-554-5866
Fax: 315-437-5860
E-mail: info.us@jumo.net
Internet: www.jumousa.com

Devices in stock: JUMO heatTHERM-DR

Thermostat for DIN rail installation TH35, according to DIN EN 60715, type 7

Type 603070/....-[a]

- Protection type IP20
- DIN rail installation TH35
- Easy to assemble and user friendly

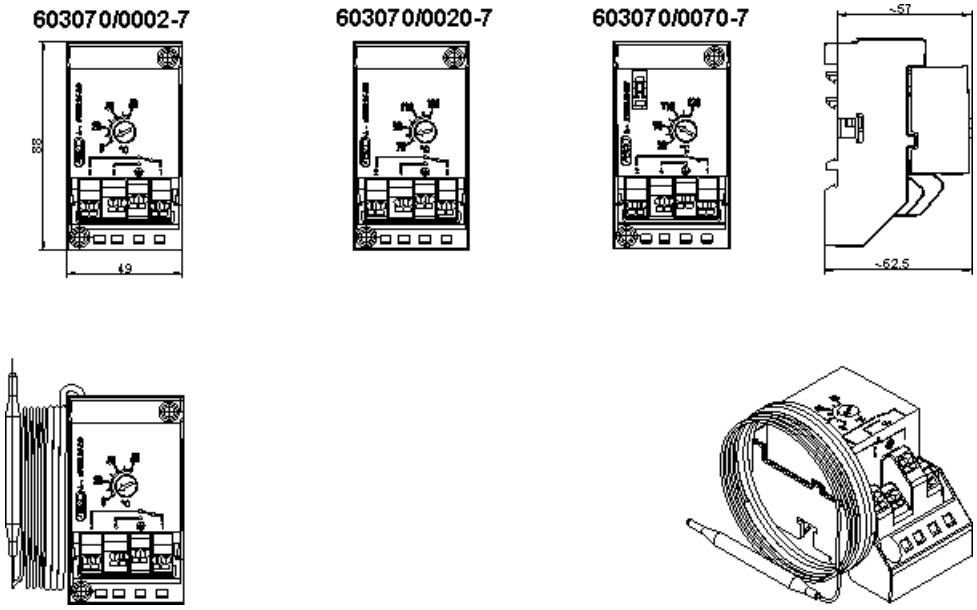

Part no.	Type	Control range °C	Capillary mm	Probe–∅ (d) × L mm	Switching differential	Process connection
Temperature monitor TW						
60003283	603070/0002	0 to +120	2000	6 × 87	Approx. 3K	With capillary and contact probe
60003284	603070/0002	0 to +200		6 x 78	Approx. 5 K	
60003285	603070/0002	+50 to +300		6 x 66	Approx. 6 K	
Safety temperature monitor STW						
60003286	603070/0020	+70 to +130	2000	6 x 66	Approx. 10 K	With capillary and contact probe
Safety temperature limiter STB					Unlocking difference	
60003287	603070/0070	+70 to +130	2000	6 x 66	Approx. 10K	With capillary and contact probe
60003299	603070/0070	+20 to +150		6 × 60	In the upper third approx. 15 K At the scale beginning approx. 30 K	
60003300	603070/0070	+50 to +300		6 × 85	In the upper third approx. 25 K At the scale beginning approx. 45 K	

[a] Further design versions (control range, switching differential, process connection) upon request - minimum order quantity 100 pieces. Thermowells page 15.

JUMO GmbH & Co. KG
Delivery address: Mackenrodtstraße 14
36039 Fulda, Germany
Postal address: 36035 Fulda, Germany
Phone: +49 661 6003-0
Fax: +49 661 6003-607
E-mail: mail@jumo.net
Internet: www.jumo.net

JUMO Instrument Co. Ltd.
JUMO House
Temple Bank, Riverway
Harlow, Essex CM20 2DY, UK
Phone: +44 1279 635533
Fax: +44 1279 635262
E-mail: sales@jumo.co.uk
Internet: www.jumo.co.uk

JUMO Process Control, Inc.
6733 Myers Road
East Syracuse, NY 13057, USA
Phone: 315-437-5866
1-800-554-5866
Fax: 315-437-5860
E-mail: info.us@jumo.net
Internet: www.jumousa.com

JUMO heatTHERM-DR

Thermostat for DIN rail installation TH35, according to DIN EN 60715, type 8

Type 603070/0002-8[a]

- Protection type IP20
- DIN rail installation TH35
- Easy to assemble and user friendly

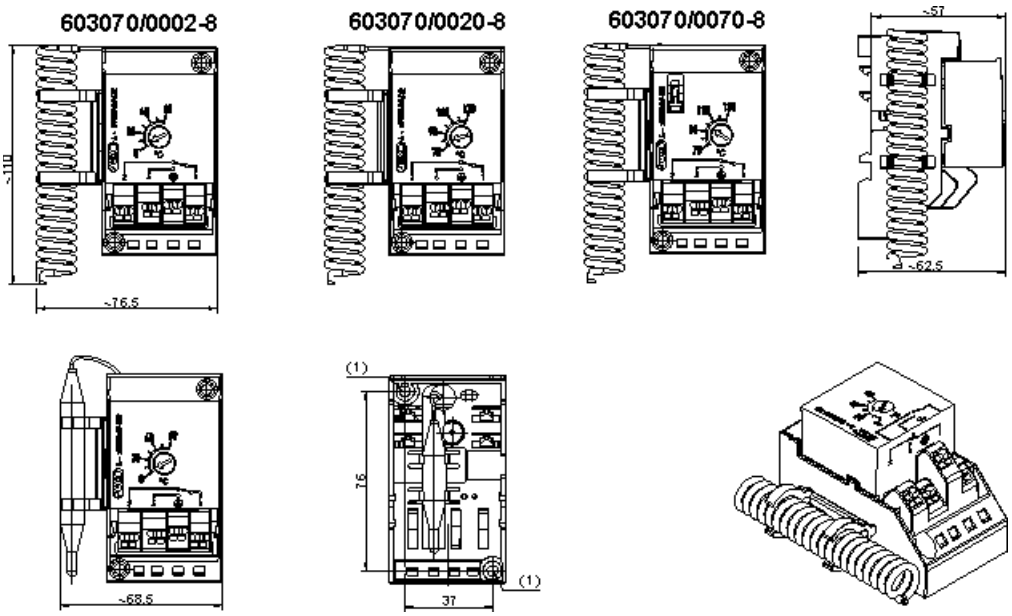

Fastening hole (1)
= ∅ 4.5 mm

[a] Upon request - minimum order quantity 100 pieces.

JUMO GmbH & Co. KG
Delivery address: Mackenrodtstraße 14
36039 Fulda, Germany
Postal address: 36035 Fulda, Germany
Phone: +49 661 6003-0
Fax: +49 661 6003-607
E-mail: mail@jumo.net
Internet: www.jumo.net

JUMO Instrument Co. Ltd.
JUMO House
Temple Bank, Riverway
Harlow, Essex CM20 2DY, UK
Phone: +44 1279 635533
Fax: +44 1279 635262
E-mail: sales@jumo.co.uk
Internet: www.jumo.co.uk

JUMO Process Control, Inc.
6733 Myers Road
East Syracuse, NY 13057, USA
Phone: 315-437-5866
1-800-554-5866
Fax: 315-437-5860
E-mail: info.us@jumo.net
Internet: www.jumousa.com

Order details

Surface-mounted thermostat JUMO heatTHERM, type 603070

Minimum purchase order 100 pieces

Order code	(1)	Basic type
603070		JUMO heatTHERM with single-pole snap-action switch

	(2)	Basic type extension
0001		Temperature controller (TR)
0002		Temperature monitor (TW)
0020		Safety temperature monitor (STW) or flue gas temperature monitor (ATW)
0070		Safety temperature limiter (STB)
0120		Temperature controller / safety temperature monitor (TR/STW)
0170		Temperature controller / safety temperature limiter (TR/STB)
0202		Temperature monitor / temperature monitor (TW/TW)

	(3)	Type	
5			Surface-mounted thermostat, with thermowell, flange sleeve, capillary, or as contact probe
6			surface-mounted room thermostat, with spiral probe
7			DIN rail thermostat, with capillary
8			DIN-rail room thermostat, with spiral probe

	(4)	Control range / limit value range 1 [°C]		
016		-10 to +40	TR, TW	
021		0 to +50	TR, TW	
026		0 to +120	TR, TW	
028		0 to +200	TR, TW, STB	
040		+20 to +80	STW	
043		+20 to +150	TR, TW, STB	
064		+50 to +300	TR, TW, STB	With thermowell, select process connection 76
671		+70 to +130	STW, STB	
384		+20 to +280	ATW	Only with process connection 80
		Further control ranges / limit value ranges up to 350 °C upon request (up to +500 °C without approval)		

	(5)	Control range / limit value range 2 [°C]		
000		Single thermostat		
016		-10 to +40	TR, TW	Adjustable
021		0 to +50	TR, TW	Adjustable
671		+70 to +130	STW, STB	Adjustable
		Further control ranges / limit value ranges up to 350 °C upon request (up to +500 °C without approval)		

	(6)	Limit value 1 STW/STB
000		for adjustable control range
095		95 °C
100		100 °C
110		110 °C

JUMO GmbH & Co. KG
Delivery address: Mackenrodtstraße 14
36039 Fulda, Germany
Postal address: 36035 Fulda, Germany
Phone: +49 661 6003-0
Fax: +49 661 6003-607
E-mail: mail@jumo.net
Internet: www.jumo.net

JUMO Instrument Co. Ltd.
JUMO House
Temple Bank, Riverway
Harlow, Essex CM20 2DY, UK
Phone: +44 1279 635533
Fax: +44 1279 635262
E-mail: sales@jumo.co.uk
Internet: www.jumo.co.uk

JUMO Process Control, Inc.
6733 Myers Road
East Syracuse, NY 13057, USA
Phone: 315-437-5866
1-800-554-5866
Fax: 315-437-5860
E-mail: info.us@jumo.net
Internet: www.jumousa.com

Order details

Surface-mounted thermostat JUMO heatTHERM, type 603070

Order code	(7)	Limit value 2 STW/STB	
000		for adjustable control range	
095		95 °C	
100		100 °C	
110		110 °C	
	(8)	**Switching differential 1**	
00		Without switching differential (STB)	
25		2.5 %	of the scale range
70		7 %	of the scale range
	(9)	**Switching differential 2**	
00		Without switching differential (STB)	
25		2.5 %	of the scale range
70		7 %	of the scale range
	(10)	**Capillary length 1**	
0		0 mm	only for room thermostat
2000		2000 mm	
		Special length upon request	
	(11)	**Capillary length 2**	
0		0 mm	only for room thermostat
2000		2000 mm	
		Special length upon request	
	(12)	**Material of capillary 1**	
00		Without capillary	
20		CrNi	Stainless steel
40		Cu	Copper
	(13)	**Material of capillary 2**	
00		Without capillary	Single thermostat
20		CrNi	Stainless steel
40		Cu	Copper
	(14)	**Process connection**	
10		Plain cylindrical probe / contact probe	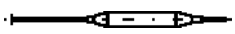
15		Spiral probe	
80[a]		Intermediate piece with mounting flange	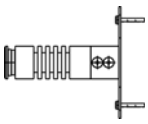
76[b]		Intermediate piece	

[a] Only control ranges +20 to +280 °C (ATW) selectable.
[b] As of a control range value larger than 150 °C, select process connection 76 for mounting with thermowell. Select thermowell according to data sheet 606710, screw-in sleeve "20" with G1/2 thread made out of stainless steel (CrNi).

JUMO GmbH & Co. KG
Delivery address: Mackenrodtstraße 14
36039 Fulda, Germany
Postal address: 36035 Fulda, Germany
Phone: +49 661 6003-0
Fax: +49 661 6003-607
E-mail: mail@jumo.net
Internet: www.jumo.net

JUMO Instrument Co. Ltd.
JUMO House
Temple Bank, Riverway
Harlow, Essex CM20 2DY, UK
Phone: +44 1279 635533
Fax: +44 1279 635262
E-mail: sales@jumo.co.uk
Internet: www.jumo.co.uk

JUMO Process Control, Inc.
6733 Myers Road
East Syracuse, NY 13057, USA
Phone: 315-437-5866
1-800-554-5866
Fax: 315-437-5860
E-mail: info.us@jumo.net
Internet: www.jumousa.com

Order details

Surface-mounted thermostat JUMO heatTHERM, type 603070

Order code	(15)	Diameter 1	
6		∅ 6 mm	
17		∅ 17 mm	Spiral probe for room thermostat (with process connection 15)

	(16)	Diameter 2	
00		Single thermostat	
6		∅ 6 mm	
17		∅ 17 mm	Spiral probe for room thermostat (with process connection 15)

	(17)	Probe material 1	
20		CrNi	Stainless steel
40		Cu	Copper

	(18)	Probe material 2	
00		Single thermostat	
20		CrNi	Stainless steel
40		Cu	Copper

	(19)	Capillary insulation
00		No protective tube
13		PVC tube, black

	(20)	Insulation length (from case)
0		No protective hose
460		460 mm
		Special length upon request

	(21)	Extra codes[a]
000		Without extra codes
061		With UL approval
402		Case protection type IP54
702		Snap-action switch, gold-plated
749		Setting range with 250 angular degrees (only STB/STW)
758		Tightening band for contact probe

[a] List extra codes in sequence, separated by commas.

Order code

(1)	(2)	(3)	(4)	(5)	(6)	(7)	(8)	(9)	(10)	(11)	(12)	(13)	(14)	(15)	(16)	(17)	(18)	(19)	(20)	(21)
603070 /		-	-	-	-	-	-	-	-	-	-	-	-	-	-	-	-	-	- /	, . . .

Order example

603070 /	0001 -	5 -	021 -	671 -	000 -	000 -	70 -	00 -	2000 -	00 -	40 -	00 -	10 -	6 -	00 -	20 -	20 -	00 -	0 /	000[a]	, . . .

[a] List extra codes in sequence, separated by commas.

JUMO GmbH & Co. KG
Delivery address: Mackenrodtstraße 14
36039 Fulda, Germany
Postal address: 36035 Fulda, Germany
Phone: +49 661 6003-0
Fax: +49 661 6003-607
E-mail: mail@jumo.net
Internet: www.jumo.net

JUMO Instrument Co. Ltd.
JUMO House
Temple Bank, Riverway
Harlow, Essex CM20 2DY, UK
Phone: +44 1279 635533
Fax: +44 1279 635262
E-mail: sales@jumo.co.uk
Internet: www.jumo.co.uk

JUMO Process Control, Inc.
6733 Myers Road
East Syracuse, NY 13057, USA
Phone: 315-437-5866
1-800-554-5866
Fax: 315-437-5860
E-mail: info.us@jumo.net
Internet: www.jumousa.com

Accessories

(according to product group 606710)

Thermowell set Suitable for **1 probe**	Thermowell with sealing collar				Clamp for strain relief	Plate for surface-mounted thermostat	Screw for surface-mounted thermostat
	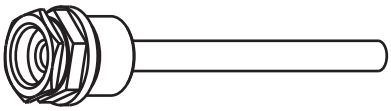					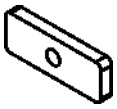	
Part no.	Type	Abbreviation	Connection	∅ sleeve × fitting length EL		Material	Pressure loading capacity at +150 °C
60003177	Thermowell for JUMO heatTHERM, 1 probe	28	G 1/2	8 × 100 mm		Brass/ nickel-plated	48 bar
60003203				8 x 150 mm			
60003171				8 x 200 mm			
60003172				8 × 100 mm		Stainless steel / 1.4571	88 bar
60003205				8 x 150 mm			
60003173				8 x 200 mm			

Thermowell set Suitable for **2 probes**	Thermowell with sealing collar				Clamp for strain relief	Plate for surface-mounted thermostat	Screw for surface-mounted thermostat
	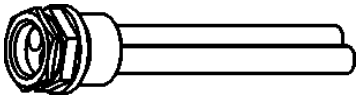					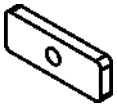	
Part no.	Type	Abbreviation	Connection	∅ sleeve × fitting length EL		Material	Pressure loading capacity at +150 °C
60003178	Thermowell for JUMO heatTHERM, 2 probes	29	G 1/2	2 × 8 × 100 mm		Brass / nickel-plated	48 bar
60003204				2 x 8 x 150 mm			
60003174				2 x 8 x 200 mm			

Thermowell set Suitable for **2 probes**	Thermowell with sealing collar			Pressure spring	Clamp for strain relief	Plate for surface-mounted thermostat	Screw for surface-mounted thermostat
	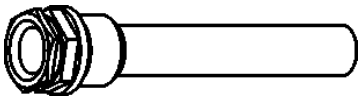					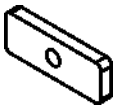	
Part no.	Type	Abbreviation	Connection	∅ sleeve × fitting length EL		Material	Pressure loading capacity at +150 °C
60003175	Thermowell for JUMO heatTHERM, 2 probes	49	G 1/2	15 × 100 mm		Stainless steel / 1.4571	48 bar
60003206				15 x 150 mm			
60003176				15 x 200 mm			

Adapter piece for thermowell [a]		Material	
Part no.			
00507273		Steel / nickel-plated	

[a] necessary for thermowell with process connection "20" or "23".

JUMO GmbH & Co. KG
Delivery address: Mackenrodtstraße 14
36039 Fulda, Germany
Postal address: 36035 Fulda, Germany
Phone: +49 661 6003-0
Fax: +49 661 6003-607
E-mail: mail@jumo.net
Internet: www.jumo.net

JUMO Instrument Co. Ltd.
JUMO House
Temple Bank, Riverway
Harlow, Essex CM20 2DY, UK
Phone: +44 1279 635533
Fax: +44 1279 635262
E-mail: sales@jumo.co.uk
Internet: www.jumo.co.uk

JUMO Process Control, Inc.
6733 Myers Road
East Syracuse, NY 13057, USA
Phone: 315-437-5866
1-800-554-5866
Fax: 315-437-5860
E-mail: info.us@jumo.net
Internet: www.jumousa.com

JUMO frostTHERM-AT/-DR

Type 604100, Surface-mounted or DIN Rail Thermostat

JUMO frostTHERM-AT (STW)

JUMO frostTHERM-DR (STW)

Special features

- PUSH IN connection technology • **reduced installation time by 50 %**
- Maximum switching capacity16 A, 230 V
- Protection type (AT) IP40 - IP65
  (DR) IP20

Brief description

The frost protection thermostat is used for temperature monitoring in ventilation and air conditioning systems to prevent damage caused by frost. It has a low switching differential and a high reproducibility. Reset occurs automatically (STW) or manually (STB).

High application flexibility and the latest connection technology are the essential equipment features of this thermostat series. The thermostat case is suitable for all common installation types such as wall, pipe, and DIN rail mounting. The JUMO frostTHERM-DR type is a specific variation with a special case bottom section for DIN rail or wall mounting. This allows easy mounting on mounting rails TH35 according to DIN EN 60715 (e.g. in control cabinets). This version considerably reduces the mounting time.

The "Push-In®" terminal technology allows the connection wires to be only inserted into the contact point up to the stop. No tool is required for connecting the wire or braid with the ferrule, thereby increasing safety during wiring. As a result, the costs and time required for connection is considerably reduced compared that of the conventional screw terminal.

The "Push-In®" terminal technology allows direct switching of loads up to 16 A at 230 V AC. The installation costs can be reduced further because a contactor is not required.

Approval/approval marks (see Technical Data)

EAC

V2.00/EN/00561806/2020-02-01

JUMO GmbH & Co. KG
Delivery address: Mackenrodtstraße 14
36039 Fulda, Germany
Postal address: 36035 Fulda, Germany
Phone: +49 661 6003-0
Fax: +49 661 6003-607
E-mail: mail@jumo.net
Internet: www.jumo.net

JUMO Instrument Co. Ltd.
JUMO House
Temple Bank, Riverway
Harlow, Essex CM20 2DY, UK
Phone: +44 1279 635533
Fax: +44 1279 635262
E-mail: sales@jumo.co.uk
Internet: www.jumo.co.uk

JUMO Process Control, Inc.
6733 Myers Road
East Syracuse, NY 13057, USA
Phone: 315-437-5866
1-800-554-5866
Fax: 315-437-5860
E-mail: info.us@jumo.net
Internet: www.jumousa.com

Switching function

Safety temperature monitor STW	If the probe line falls below the entered setpoint value over a length of 15 cm with 3 m, 30 cm with 6 m, and 40 cm with 12 m, then electrical circuit 1-2 is opened while electrical circuit 1-4 is closed due to the change-over function. When the temperature rises, the microswitch is automatically switched back to its original position. If the measuring system is destroyed (i.e. if the expansion fluid escapes) the pressure in the diaphragm drops and permanently opens electrical circuit 1-2 and closes electrical circuit 1-4.
Safety temperature limiter STB	In the event of a temperature drop, the safety temperature limiter automatically locks and can only be unlocked manually once the temperature has risen again. If the measuring system is destroyed (i.e. if the expansion fluid escapes), the pressure in the diaphragm drops and permanently opens electrical circuit 1-2 and closes electrical circuit 1-4.

Technical data

	Type 5	**Type 7**
Case	Case bottom section: Color: Case lid: ABS with inspection window (PMMA) Color: Cobalt blue RAL 5013	PA (reinforced) Silver gray RAL 7001
Setpoint value adjustment STW, STB	The switching point can be adjusted with a screwdriver once the case lid has been removed. The set switching point can be checked through the inspection glass.	Switching point can adjusted with a screwdriver.
Protection class	IP 40 according to EN 60529 IP 65 according to EN 60529 (TZ 404)	IP 20 according to EN 60529
Electrical connection	Cable gland M 20 x 1.5, for cable ∅ 6-12 mm	Cable connection directly on PUSH IN terminals
Probe line-Ø	Approx. 2.4 mm (or 9.5 mm with 1.8 m capillary)	
Case mounting	Wall mounting / pipe mounting	Wall mounting, DIN rail installation TH35 according to DIN EN 60715
Weight	Approx. 0.2 kg	
Allowable storage temperature	-30 °C to +80 °C	
Allowable ambient conditions on the switching head	-20 °C to +80 °C The ambient temperature must exceed the switching point by +2 °C.	
Maximum allowable probe line temperature	120 °C	
Allowable minimum bending radius of the probe line	20 mm	

Approvals / approval marks

Approval marks	Testing agency	Certificates / certification number	Inspection basics	Valid for
EAC[a]	Gost Norm AG	TC RU C-DE.AB98.B.00348	Technical rules of the customs union Russia/Belarus/ Kazakhstan	JUMO frostTHERM-AT/ -DR

[a] Russian documentation upon request

JUMO GmbH & Co. KG
Delivery address: Mackenrodtstraße 14
36039 Fulda, Germany
Postal address: 36035 Fulda, Germany
Phone: +49 661 6003-0
Fax: +49 661 6003-607
E-mail: mail@jumo.net
Internet: www.jumo.net

JUMO Instrument Co. Ltd.
JUMO House
Temple Bank, Riverway
Harlow, Essex CM20 2DY, UK
Phone: +44 1279 635533
Fax: +44 1279 635262
E-mail: sales@jumo.co.uk
Internet: www.jumo.co.uk

JUMO Process Control, Inc.
6733 Myers Road
East Syracuse, NY 13057, USA
Phone: 315-437-5866
1-800-554-5866
Fax: 315-437-5860
E-mail: info.us@jumo.net
Internet: www.jumousa.com

Electrical data

Electrical contact	Snap-action switch with single-pole changeover contact	
Switching capacity	STW	STB
	On the N/C contact (contact deck 1-2): AC 230 V +10 %, 16 (2.5) A, cos φ = 1 (0.6), DC 230 V +10 %, 0.25 A On the N/O contact (contact deck 1-4): AC 230 V +10 %, 6.3 (2.5) A, cos φ = 1 (0.6), DC 230 V +10 %, 0.25 A	On the N/C contact (contact deck 1-2): AC 230 V +10 %, 16 (2.5) A, cos = 1 (0.6), DC 230 V +10 %, 0.25 A On the signal contact (contact deck 1-4): AC 230 V +10 %, 2 (04) A, cos = 1 (0.6), DC 230 V +10 %, 0.25 A
Electrical connection	PUSH IN contact (plug-type terminal) "Push-In®" terminal technology: Patented connection technology from Weidmüller GmbH & Co. KG, Detmold.	
Connection cross section	0.75 to 2.5 mm^2 finely stranded (single-wire, fine wired with ferrule)	
Switching reliability	To ensure high switching reliability, we recommend a minimum load of: AC / DC = 24 V, 100 mA with silver contacts	
Switching point accuracy	+/- 2 °C	
Switching differential	Approx. 1.5 +/- 1 °C	
Factory setting switching point	5 °C	

Connection diagram

	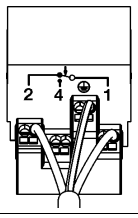	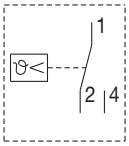 STW	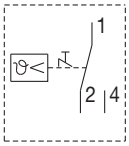 STB	The connection diagram included in the data sheet provides initial information about the connection options. Only use the installation instructions or the operating instructions for the electrical connection. The know-how and the correct technical implementation of the safety instructions/warnings contained in these documents are prerequisite for the installation, electrical connection, and startup as well as for safety during operation.

JUMO GmbH & Co. KG
Delivery address: Mackenrodtstraße 14
36039 Fulda, Germany
Postal address: 36035 Fulda, Germany
Phone: +49 661 6003-0
Fax: +49 661 6003-607
E-mail: mail@jumo.net
Internet: www.jumo.net

JUMO Instrument Co. Ltd.
JUMO House
Temple Bank, Riverway
Harlow, Essex CM20 2DY, UK
Phone: +44 1279 635533
Fax: +44 1279 635262
E-mail: sales@jumo.co.uk
Internet: www.jumo.co.uk

JUMO Process Control, Inc.
6733 Myers Road
East Syracuse, NY 13057, USA
Phone: 315-437-5866
1-800-554-5866
Fax: 315-437-5860
E-mail: info.us@jumo.net
Internet: www.jumousa.com

Dimensions

JUMO frostTHERM type 604100

JUMO frostTHERM-AT	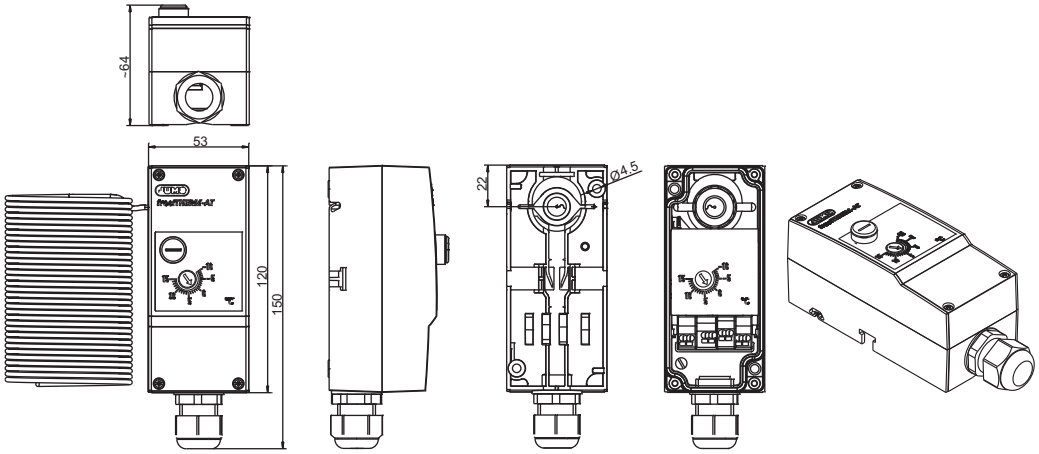
JUMO frostTHERM-DR	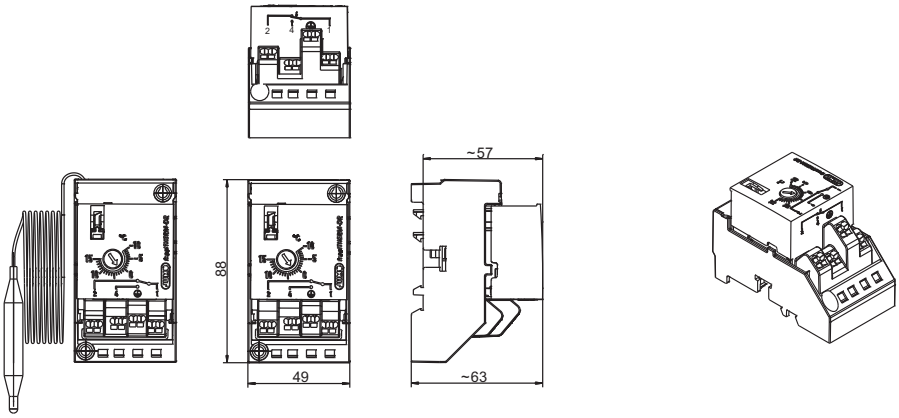

Accessories

(Data sheet 606710)

Sales no.	Type	Material	
00558731 3 pieces	Holder	Polyamide, reinforced	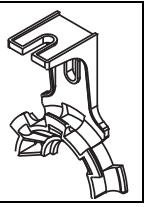
00558730 6 pieces			

JUMO GmbH & Co. KG
Delivery address: Mackenrodtstraße 14
36039 Fulda, Germany
Postal address: 36035 Fulda, Germany
Phone: +49 661 6003-0
Fax: +49 661 6003-607
E-mail: mail@jumo.net
Internet: www.jumo.net

JUMO Instrument Co. Ltd.
JUMO House
Temple Bank, Riverway
Harlow, Essex CM20 2DY, UK
Phone: +44 1279 635533
Fax: +44 1279 635262
E-mail: sales@jumo.co.uk
Internet: www.jumo.co.uk

JUMO Process Control, Inc.
6733 Myers Road
East Syracuse, NY 13057, USA
Phone: 315-437-5866
1-800-554-5866
Fax: 315-437-5860
E-mail: info.us@jumo.net
Internet: www.jumousa.com

Order details

JUMO frostTHERM type 604100

Order code	(1)	Basic type	
604100		JUMO frostTHERM with single-pole snap-action switch	
	(2)	**Basic type extension**	
20		Safety temperature monitor (STW)	
70		Safety temperature limiter (STB)	
	(3)	**Type**	
5			Surface-mounted thermostat
7			DIN rail thermostat
	(4)	**Control / limit value range**	
140		-10 to +15	STW, STB
	(5)	**Probe line length**	
1800		1800 mm	Capillary with bulb probe
3000		3000 mm	
6000		6000 mm	
12000		12000 mm	
	(6)	**Probe diameter**	
0		Without	(for probe line)
9		∅ 9.5 mm	(for 1800 mm capillary with cartridge probe)
	(7)	**Probe material**	
40		Cu	Copper
	(8)	**Extra code**	
000		Without extra code	
404		Case protection class IP65	

Order code

(1)		(2)		(3)		(4)		(5)		(6)		(7)		(8)
604100	/		-		-		-		-		-		/	

Order example

604100	/	20	-	5	-	140	-	3000	-	0	-	40	/	404

Stock versions

Sales no.	Type	Control Range °C	Probe lead length	Protection class
60003347	JUMO frostTHERM-AT /20	-10 to +15	3000 mm	IP 40
60003348			6000 mm	
60003349			3000 mm	IP 65
60003350			6000 mm	

JUMO GmbH & Co. KG
Delivery address: Mackenrodtstraße 14
36039 Fulda, Germany
Postal address: 36035 Fulda, Germany
Phone: +49 661 6003-0
Fax: +49 661 6003-607
E-mail: mail@jumo.net
Internet: www.jumo.net

JUMO Instrument Co. Ltd.
JUMO House
Temple Bank, Riverway
Harlow, Essex CM20 2DY, UK
Phone: +44 1279 635533
Fax: +44 1279 635262
E-mail: sales@jumo.co.uk
Internet: www.jumo.co.uk

JUMO Process Control, Inc.
6733 Myers Road
East Syracuse, NY 13057, USA
Phone: 315-437-5866
1-800-554-5866
Fax: 315-437-5860
E-mail: info.us@jumo.net
Internet: www.jumousa.com

JUMO frostTHERM-ATE

Electronic Frost Protection Thermostat, Type 604170

Special features

- Active probe line, setting range 1 to 10°C
- Operating mode with choice of manual or automatic reset
- Regulated membrane heating
- Self-monitoring of the probe line
- Signal input/output for valve control DC 0 to 10 V
- Probe line length 2000 mm or 6000 mm
- Protection type EN 60529, IP42
- Operating voltage (SELV) AC 24 V

Brief description

The frost protection thermostat is used for air-side temperature monitoring in ventilation and air conditioning systems to prevent damage caused by freezing.

Applications:

- Switching off ventilators
- Opening heating valves
- Closing air flaps
- Or other measures to prevent freezing

Thanks to the freely selectable switching point between 1 and 10 °C and the choice of a monitoring (automatic reset) or limiting function (manual reset), the JUMO frostTHERM-ATE can always be adjusted to suit the requirements of any particular application. The self-monitoring feature for the probe line ensures that the thermostat switches to frost function and the monitored plant remains protected at all times if a capillary tube breaks.

Block diagram

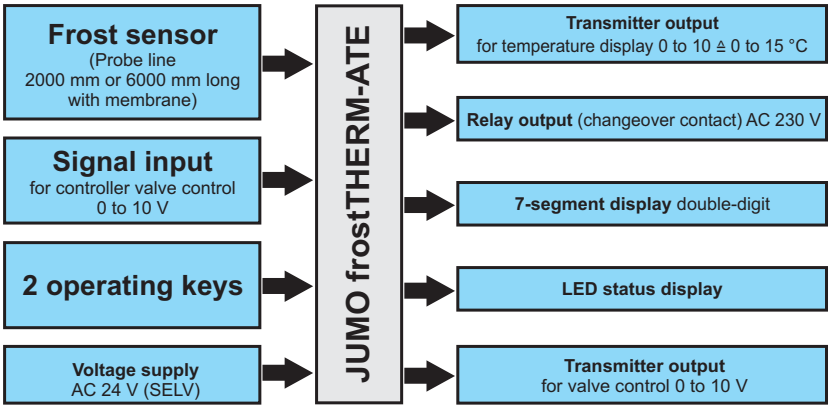

JUMO GmbH & Co. KG
Delivery address: Mackenrodtstraße 14
36039 Fulda, Germany
Postal address: 36035 Fulda, Germany
Phone: +49 661 6003-0
Fax: +49 661 6003-607
E-mail: mail@jumo.net
Internet: www.jumo.net

JUMO Instrument Co. Ltd.
JUMO House
Temple Bank, Riverway
Harlow, Essex CM20 2DY, UK
Phone: +44 1279 635533
Fax: +44 1279 635262
E-mail: sales@jumo.co.uk
Internet: www.jumo.co.uk

JUMO Process Control, Inc.
6733 Myers Road
East Syracuse, NY 13057, USA
Phone: 315-437-5866
1-800-554-5866
Fax: 315-437-5860
E-mail: info.us@jumo.net
Internet: www.jumousa.com

Description

Device function

The frost monitor uses a steam-filled probe line and a membrane system to record the lowest temperature that occurs anywhere along at least 250 mm of the probe line. Assuming the probe line is correctly aligned at the air outlet for the air heater, it will also record the lowest temperature in the event of varying air temperature layers.

The steam pressure in the probe line displaces the membrane. With the help of an inductive measuring system, this movement is converted into an electrical signal and electronically amplified, and in turn generates a DC 0 to 10 V measuring signal.

In order to ensure it is always the lowest temperature measured at the probe line, the membrane temperature in the inner part of the case must always be higher than the probe line temperature. The heating facility installed in the case as standard achieves this by keeping the membrane temperature over 15 °C at ambient temperatures down to -15 °C.

Function

The frost monitor uses three independent functions to help it perform its task:

1. It keeps the heating valve constantly open within a proportional control range.
2. It switches off the ventilators via its relay contact and closes the flaps.
3. It makes the measured temperature available for further processing.

The measuring signal undergoes further processing and becomes the frost signal for the monitor function and valve control. At around 6 kelvin above the set switching point (P), the frost signal starts to increase.

Function chart

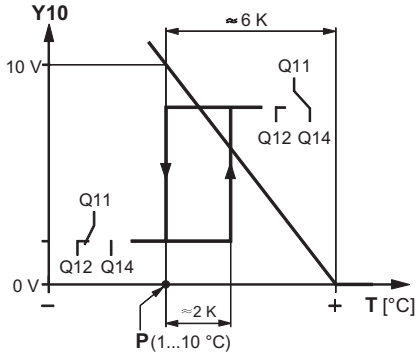

P = Switching point can be adjusted
T = Capillary temperature
Y10 = Valve control signal (Y = DC 0 V)
Q11/12/14 = Relay output (changeover contact) AC 230 V

Circuit diagram for device

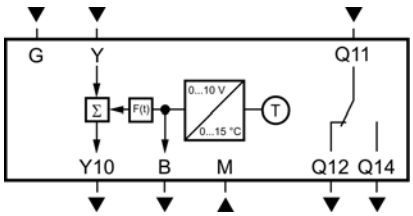

G = Voltage supply (SELV) AC 24 V
M = System zero point, measurement zero point
B = Transducer output
DC 0 to 10 V ≙ 0 to 15 °C
Y = Signal input for valve controller
DC 0 to 10 V
Y10 = Transducer output for valve control
DC 0 to 10 V
Q11/12/14 = Relay output AC/DC 12 to 230 V
Q12 = Closed if risk of frost

Display and control elements

(1) Display	7-segment 2-digit display, red
(2) Relay status indication	1 LED for relay output
(3) Keys	To operate and program the device in order to perform a reset in manual operating mode

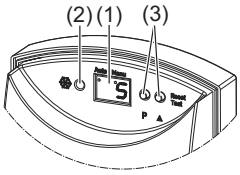

Parameters and configuration

Description	Display	Default setting	Value range
Switching point	Sp	5 °C	1 to 10 °C
Operating mode	St	Automatic	Automatic (At) Manual (Hd)

JUMO GmbH & Co. KG
Delivery address: Mackenrodtstraße 14
36039 Fulda, Germany
Postal address: 36035 Fulda, Germany
Phone: +49 661 6003-0
Fax: +49 661 6003-607
E-mail: mail@jumo.net
Internet: www.jumo.net

JUMO Instrument Co. Ltd.
JUMO House
Temple Bank, Riverway
Harlow, Essex CM20 2DY, UK
Phone: +44 1279 635533
Fax: +44 1279 635262
E-mail: sales@jumo.co.uk
Internet: www.jumo.co.uk

JUMO Process Control, Inc.
6733 Myers Road
East Syracuse, NY 13057, USA
Phone: 315-437-5866
1-800-554-5866
Fax: 315-437-5860
E-mail: info.us@jumo.net
Internet: www.jumousa.com

Technical data

Specifications	Measuring range	Measuring range	0 to 15 °C
		Setting range	1 to 10 °C
	Adjustment point		5 °C
		Accuracy at adjustment point	+/- 1 K
	Switching differential		Approx. 2 K
	Time constant	In still air	Approx. 90 s
		In moving air	< 40 s
	Probe line	Minimum response length	250 mm
		Admissible temperature	Max. 110 °C
	Weight	Frost monitor, 2 m probe line	Approx. 0.34 kg
		Frost monitor, 6 m probe line	Approx. 0.41 kg
Electrical data according to EN 60730	Electrical connection	Terminals featuring tension springs	Max. 2 x 1.5 mm² or 1 x 2.5 mm² Min. 0.25 mm²
		Cable inlet	Cable gland M16, for cable Ø 5 to 10 mm
	Voltage supply		AC 24 V +10 % / -20 %, SELV
		Frequency	48 to 63 Hz
		Power consumption	Max. 6.6 VA
		Electrical protection	Power switch max. 13 A
	Analog input	Valve control (terminal Y)	DC 0 to 10 V
		Current	Max. 0.1 mA
		Admissible line length for 1.5 mm²	300 m
	Analog outputs	Probe temperature (terminal B)	DC 0 to 10 V ≙ 0 to 15 °C
		Valve control (terminal Y10)	DC 0 to 10 V
		Current	Max. 1 mA
		Admissible line length for 1.5 mm²	300 m
	Relay output (terminal Q11, -12, -14)	Output	Floating
		Min. switching capacity	AC/DC 12 V, 100 mA
		Max. switching capacity	AC 230 V, 6(2) A; DC 24 V, 6 A
Environmental influences	Operating temperature range	Operation according to	IEC 721-3-3
		Climatic conditions	Class 3K5
		Temperature	-15 to +55 °C
		Humidity	< 85 % r. H.
	Storage/Transport	Operation according to	IEC 721-3-2
		Climatic conditions	Class 2K3
		Temperature	-25 to +65 °C
		Humidity	< 95 % r. H.
	Electromagnetic compatibility	Interference emission	Class B according to EN 61 326-1
		Interference immunity	Industrial requirements according to EN 61 326-1
		CE conformity according to the EMC Directive	2004/108/EC
		Low Voltage Directive	2006/95/EC
	Vibration strength	DIN EN 60 721-3-3	Class 3M2
Case	Materials/Colors	Case lid	PC, transparent
		Case bottom section	PA, silver gray (RAL 7001)
		Cover cap	ABS, light gray (RAL 7035)
		Probe line	Copper
		Packaging	Corrugated cardboard

JUMO GmbH & Co. KG
Delivery address: Mackenrodtstraße 14
36039 Fulda, Germany
Postal address: 36035 Fulda, Germany
Phone: +49 661 6003-0
Fax: +49 661 6003-607
E-mail: mail@jumo.net
Internet: www.jumo.net

JUMO Instrument Co. Ltd.
JUMO House
Temple Bank, Riverway
Harlow, Essex CM20 2DY, UK
Phone: +44 1279 635533
Fax: +44 1279 635262
E-mail: sales@jumo.co.uk
Internet: www.jumo.co.uk

JUMO Process Control, Inc.
6733 Myers Road
East Syracuse, NY 13057, USA
Phone: 315-437-5866
1-800-554-5866
Fax: 315-437-5860
E-mail: info.us@jumo.net
Internet: www.jumousa.com

Connection example

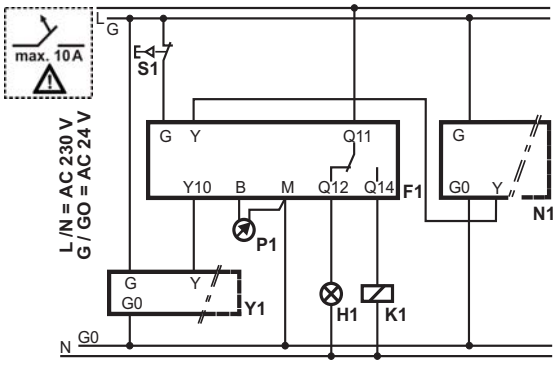

F1 JUMO frostTHERM-ATE frost monitor
N1 Controller with DC 0 to 10 V control signal
H1 e.g. external frost detector
K1 e.g. fan contactor
P1 e.g. temperature display
S1 If required, reset push-button to reset the frost status externally
Y1 Actuator

Dimensions

Measurements in mm

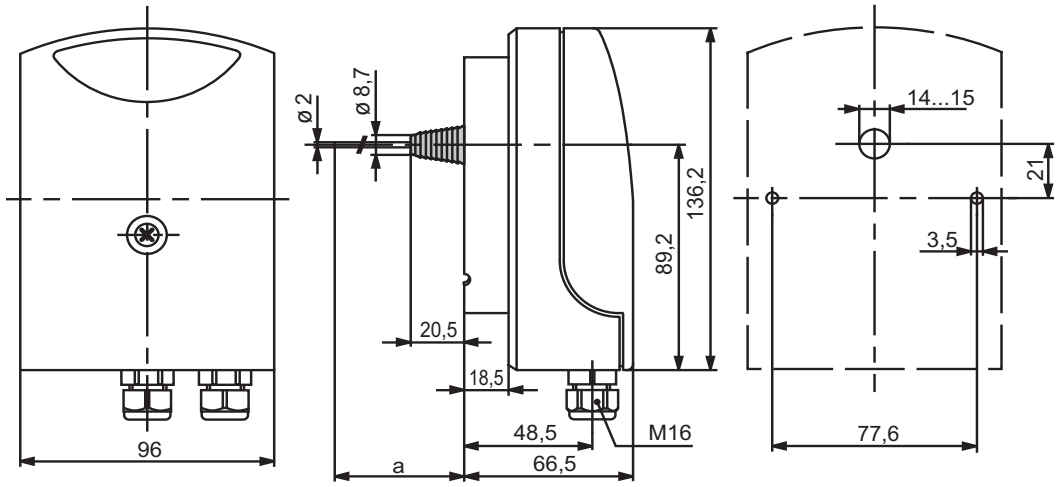

Drilling diagram for direct mounting

Optional connectable accessories

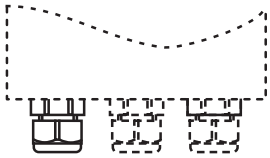

Max. 1 cable gland for additional mounting

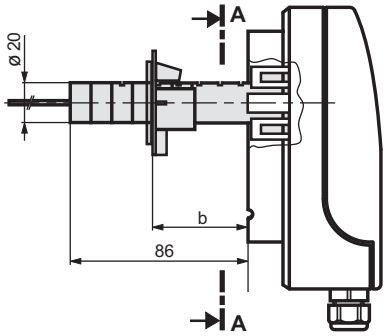

Mounting flange

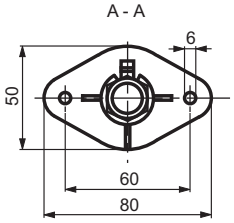

b	
Max.	Min.
70	10

JUMO GmbH & Co. KG
Delivery address: Mackenrodtstraße 14
36039 Fulda, Germany
Postal address: 36035 Fulda, Germany
Phone: +49 661 6003-0
Fax: +49 661 6003-607
E-mail: mail@jumo.net
Internet: www.jumo.net

JUMO Instrument Co. Ltd.
JUMO House
Temple Bank, Riverway
Harlow, Essex CM20 2DY, UK
Phone: +44 1279 635533
Fax: +44 1279 635262
E-mail: sales@jumo.co.uk
Internet: www.jumo.co.uk

JUMO Process Control, Inc.
6733 Myers Road
East Syracuse, NY 13057, USA
Phone: 315-437-5866
1-800-554-5866
Fax: 315-437-5860
E-mail: info.us@jumo.net
Internet: www.jumousa.com

Order details

Order code	(1)	Basic type
604170		JUMO frostTHERM-ATE
	(2)	Basic type extension
02		Frost monitor with relay contact
	(3)	Design type
5		Surface-mounted thermostat (standard)
	(4)	Control range
008		1 to 10°C
	(5)	Probe line length
2000		2000 mm
6000		6000 mm
	(6)	Probe material
40		Cu (copper)
	(7)	**Extra code**
000		Without extra code
102		Neutral version

	(1)		(2)		(3)		(4)		(5)		(6)		(7)
Order code	604170	/		-		-		-		-		/	
Order example	604170	/	02	-	5	-	008	-	6000	-	40	/	000

Stock version

JUMO frostTHERM-ATE	Probe line length 2000 mm	TN 60003410
	Probe line length 6000 mm	TN 60003411

Accessories

Accessories integrated as standard

2 x cable glands M 16 x 1.5

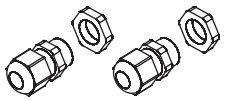

2 x screws for direct mounting

1 x rubber plug for routing the probe line

Optional connectable accessories

Mounting flange	Reinforced polyamide		1 piece	TN 00604453
Holder	Reinforced polyamide	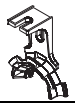	3 pieces	TN 00558731
			6 pieces	TN 00558730
Cable gland M 16 x 1.5		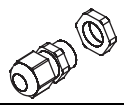	1 piece	TN 00495887

JUMO GmbH & Co. KG
Delivery address: Mackenrodtstraße 14
36039 Fulda, Germany
Postal address: 36035 Fulda, Germany
Phone: +49 661 6003-0
Fax: +49 661 6003-607
Email: mail@jumo.net
Internet: www.jumo.net

JUMO Instrument Co. Ltd.
JUMO House
Temple Bank, Riverway
Harlow, Essex, CM20 2DY, UK
Phone: +44 1279 63 55 33
Fax: +44 1279 62 50 29
Email: sales@jumo.co.uk
Internet: www.jumo.co.uk

JUMO Process Control, Inc.
6724 Joy Road
East Syracuse, NY 13057, USA
Phone: +1 315 437 5866
Fax: +1 315 437 5860
Email: info.us@jumo.net
Internet: www.jumousa.com

Hot Air Thermostats WTHc

Special features

- With microswitch
- Device combination consisting of 3 individual devices
- Protection class IP40 or IP54
- Tested according to DIN EN 14597

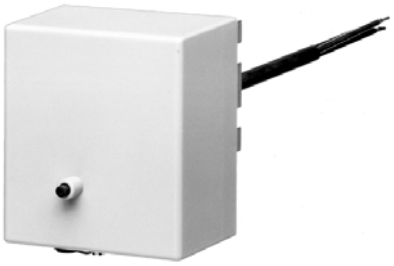

Typ 604514/2280-...

Typ 604514/2280-.../402

Brief description

Thermostats are used to control and monitor thermal processes.

The thermostats of the WTHc series are suitable for the use in hot air systems according to DIN 4794 and consist of 3 separate measuring and switching systems with the following functions: temperature controller TR, temperature monitor TW, and safety temperature limiter STB.

In the event of a malfunction, the STB switches the monitored machine line to an operational safe status.

Hot air thermostats operate according to the fluid expansion principle. The electrical switching elements are microswitches.

Switching functions

Temperature controller TR and temperature monitor TW

If the temperature on the temperature probe exceeds the setpoint value, the microswitch is activated by the transmission mechanics and the electrical circuit is opened or closed. If the temperature falls below the selected setpoint value (by the amount of the switching differential), the microswitch is reset to its initial position.

Temperature monitor TW and safety temperature limiter STB

The microswitch can be manually unlocked once the dangerous temperature drops by approx. 10 K. The microswitch can be manually unlocked once the dangerous temperature drops by approx. 10 K.

Self-monitoring for the safety temperature limiter STB

If the measuring system is destroyed (i.e. if the expansion fluid escapes) the pressure in the membrane of the STB drops and permanently opens the electrical circuit. Unlocking is then no longer possible. The electrical circuit opens when cooling the probe of STB down to the negative temperature range, but it then closes again if the temperature unlocks itself automatically.

Approvals and approval marks (see technical data)

JUMO GmbH & Co. KG
Delivery address: Mackenrodtstraße 14
36039 Fulda, Germany
Postal address: 36035 Fulda, Germany
Phone: +49 661 6003-0
Fax: +49 661 6003-607
Email: mail@jumo.net
Internet: www.jumo.net

JUMO Instrument Co. Ltd.
JUMO House
Temple Bank, Riverway
Harlow, Essex, CM20 2DY, UK
Phone: +44 1279 63 55 33
Fax: +44 1279 62 50 29
Email: sales@jumo.co.uk
Internet: www.jumo.co.uk

JUMO Process Control, Inc.
6724 Joy Road
East Syracuse, NY 13057, USA
Phone: +1 315 437 5866
Fax: +1 315 437 5860
Email: info.us@jumo.net
Internet: www.jumousa.com

Technical data

Control ranges and limit values

Control range/limit value	Ventilator controller TR	Burner monitor TW	Safety temperature limiter STB
	TR system 2 20 to 80 °C	TW system 2 70 to 90 °C	STB system Limit value 100 °C

Capillary and temperature probe

Capillary	
Material	Copper (Cu), material no. 2.0090
Diameter	Ø 1.5 mm
Capillary length including probe	350 mm with support tube, 1,250 mm without support tube[a]
Minimum bending radius	5 mm
Temperature probe	
Material	Copper (Cu), material no. 2.0090, hard soldered
Diameter	3 probes Ø 4 mm

[a] Probe identification for the version with capillary: ventilator controller TR: red; burner monitor TW: blue

Electrical data

Switching function	Ventilator controller TR, burner monitor TW	Safety temperature limiter STB
	Microswitch with changeover contact	Microswitch with N/C contact, restart lock, and additional signal contact (extra code 574)
Maximum contact rating	AC 230 V +10 %, 10(2) A, cos φ = 1(0.6) DC 230 V +10 %, 0.25 A	
Electrical connection	The electrical connection can be reached via the terminal strip after removing the case lid. Temperature controller and terminal rail are mounted to a PCB (epoxy resin glass fabrics) with printed diagram.	

Operating data

Switching differential	
Ventilator controller TR	14 ±2 K
Burner monitor TW	6 ±1 K
Switching point accuracy	
Ventilator controller TR	In the upper third of the scale or limit value ±4 K, at the scale beginning ±6 K
Burner monitor TW	In the upper third of the scale or limit value ±4 K, at the scale beginning ±4 K
Safety temperature limiter STB	In the upper third of the scale or limit value +0/-5 K
Ambient temperature influence	
On the switching head	0.35 K/K
On the capillary	0.07 K/K per meter
Operating medium	Air
Time constant	≤ 120 s in air
Over-temperature security	200 °C at the temperature probe
Admissible storage temperature	-50 to +50 °C
Admissible ambient temperature for use	Max. 80 °C
Rated position	According to DIN 16257, rated position 0 to rated position 90 (different rated position on request)

Use the device without a probe thermowell to achieve full response accuracy. Immerse the entire length of the device's temperature probe in the operating medium to be monitored.

JUMO GmbH & Co. KG
Delivery address: Mackenrodtstraße 14
36039 Fulda, Germany
Postal address: 36035 Fulda, Germany
Phone: +49 661 6003-0
Fax: +49 661 6003-607
Email: mail@jumo.net
Internet: www.jumo.net

JUMO Instrument Co. Ltd.
JUMO House
Temple Bank, Riverway
Harlow, Essex, CM20 2DY, UK
Phone: +44 1279 63 55 33
Fax: +44 1279 62 50 29
Email: sales@jumo.co.uk
Internet: www.jumo.co.uk

JUMO Process Control, Inc.
6724 Joy Road
East Syracuse, NY 13057, USA
Phone: +1 315 437 5866
Fax: +1 315 437 5860
Email: info.us@jumo.net
Internet: www.jumousa.com

Housing

Material	
Case lid, color	Polycarbonat, pebble gray RAL 7032
Case bottom part, color	Sheet steel, painted; Aluminum die casting, painted, anthracite gray RAL 7015 (extra code 402)
Setpoint value setting	
Safety temperature limiter STB	The setpoint setting is permanently factory-set.
Ventilator controller TR, burner monitor TW	The switching point can be adjusted with a screwdriver after removing the case lid.

Protection type	IP40, according to EN 60529 (standard); IP54, according to EN 60529 (extra code 402)
Cable inlet	2 plug-type sockets; IP54, according to EN 60529 (extra code 402)
Mounting of switching head	Fasten the switch head with 2 screws through the case bottom section.
	Fasten the switch head to the flange of the support tube with 2 screws, then fix it to the hexagon of the support tube with a screw (extra code 402).
Weight	Approx. 700 g

Approvals and approval marks

DIN	
Testing agency	DIN CERTCO/TÜV Süd
Certificates/certificate numbers	TR/TW/STB1064
Inspection basis	DIN EN 14597
Valid for	Type 604514
DIN	
Testing agency	DIN CERTCO/TÜV Süd
Certificates/certificate numbers	TR/TW/STW1205
Inspection basis	DIN EN 14597
Valid for	Type 604514
EAC[a]	
Testing agency	Gost Norm AG
Certificates/certificate numbers	TC RU C-DE.AB98.B.00348
Inspection basis	Technical rules of the customs union Russia/Belarus/Kazakhstan
Valid for	Type 604514

[a] Russian documentation available upon request.

JUMO GmbH & Co. KG
Delivery address: Mackenrodtstraße 14
36039 Fulda, Germany
Postal address: 36035 Fulda, Germany
Phone: +49 661 6003-0
Fax: +49 661 6003-607
Email: mail@jumo.net
Internet: www.jumo.net

JUMO Instrument Co. Ltd.
JUMO House
Temple Bank, Riverway
Harlow, Essex, CM20 2DY, UK
Phone: +44 1279 63 55 33
Fax: +44 1279 62 50 29
Email: sales@jumo.co.uk
Internet: www.jumo.co.uk

JUMO Process Control, Inc.
6724 Joy Road
East Syracuse, NY 13057, USA
Phone: +1 315 437 5866
Fax: +1 315 437 5860
Email: info.us@jumo.net
Internet: www.jumousa.com

Dimensions

Type 604514/2280-... with protection type IP40

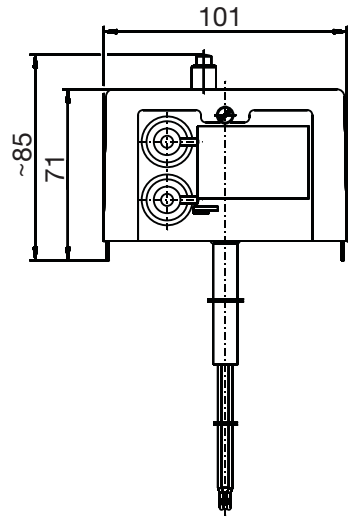

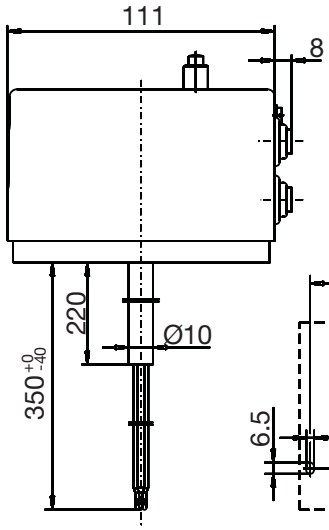

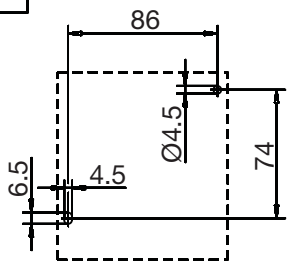

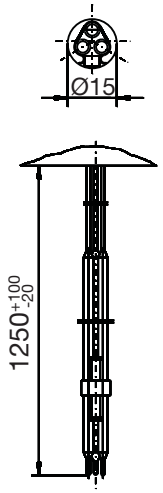

Design 1 with support tube, switching head is mounted with 2 screws through the case bottom section, extra code 711

Drilling plan

View 10

Design 2 without support tube, switching head is mounted with 2 screws through the case bottom section, extra code 711 with capillary, process connection 10

Typ 604514/2280-.../402 with protection type IP54 (extra code 402)

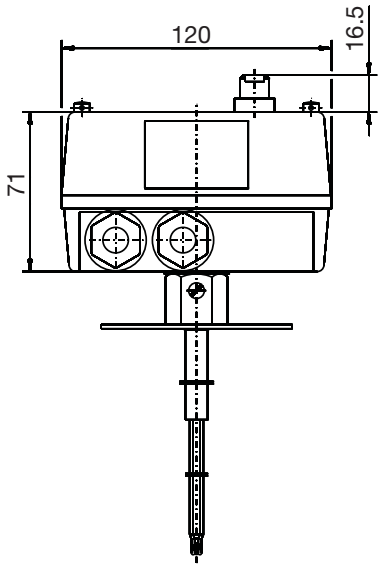

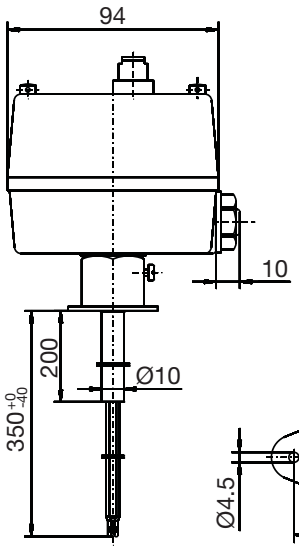

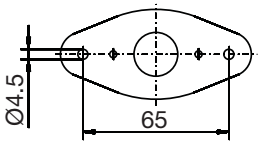

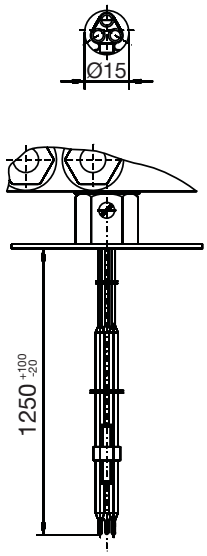

Design 1 with support tube, process connection 26, thermowell with flange, open

Drilling plan

View 10

Design 2 without support tube, switching head is mounted by using a mounting flange made of CuZn, extra code 764 with capillary, process connection 10

JUMO GmbH & Co. KG
Delivery address: Mackenrodtstraße 14
36039 Fulda, Germany
Postal address: 36035 Fulda, Germany
Phone: +49 661 6003-0
Fax: +49 661 6003-607
Email: mail@jumo.net
Internet: www.jumo.net

JUMO Instrument Co. Ltd.
JUMO House
Temple Bank, Riverway
Harlow, Essex, CM20 2DY, UK
Phone: +44 1279 63 55 33
Fax: +44 1279 62 50 29
Email: sales@jumo.co.uk
Internet: www.jumo.co.uk

JUMO Process Control, Inc.
6724 Joy Road
East Syracuse, NY 13057, USA
Phone: +1 315 437 5866
Fax: +1 315 437 5860
Email: info.us@jumo.net
Internet: www.jumousa.com

Connection diagram

The connection diagram in the data sheet provides information on product selection.

For the electrical connection, only use the installation instructions or the operating manual.

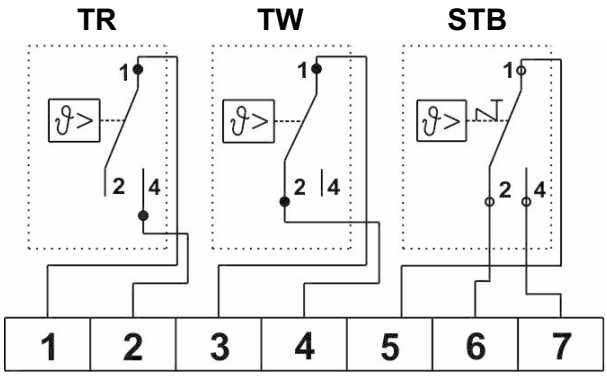

TR Ventilator
TW Burner
STB Burner

For versions without extra code 574, terminal 7 is not assigned.

JUMO GmbH & Co. KG
Delivery address: Mackenrodtstraße 14
36039 Fulda, Germany
Postal address: 36035 Fulda, Germany
Phone: +49 661 6003-0
Fax: +49 661 6003-607
Email: mail@jumo.net
Internet: www.jumo.net

JUMO Instrument Co. Ltd.
JUMO House
Temple Bank, Riverway
Harlow, Essex, CM20 2DY, UK
Phone: +44 1279 63 55 33
Fax: +44 1279 62 50 29
Email: sales@jumo.co.uk
Internet: www.jumo.co.uk

JUMO Process Control, Inc.
6724 Joy Road
East Syracuse, NY 13057, USA
Phone: +1 315 437 5866
Fax: +1 315 437 5860
Email: info.us@jumo.net
Internet: www.jumousa.com

Order details

	(1)	**Basic type**
604514		Hot air thermostat WTHc
	(2)	**Basic type extensions**
2280		Temperature controller TR and temperature monitor TW with changeover contact, safety temperature limiter STB with N/C contact, and restart lock
	(3)	**Design**
1		With support tube
2		With capillary
	(4)	**Control range TR**[a]
040		20 to 80 °C
	(5)	**Control range TW**[a]
070		70 to 90 °C
	(6)	**Limit value STB**[a]
10		100 °C
	(7)	**Capillary length**
0		Without capillary
1250		1,250 mm
	(8)	**Process connection**
00		Without
10		Plain cylindrical probe
26		Thermowell with flange, open 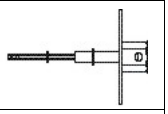
	(9)	**Fitting length**
000		With capillary
350		350 mm
	(10)	**Probe diameter**
4		4 mm
	(11)	**Extra codes**
000		Without
402		Protection type IP54
574		Microswitch with N/C contact, restart lock, and additional signal contacts
711		Switching head is mounted by 2 screws through the case bottom section
764		Mounting flange made of sheet steel

[a] Other control ranges or limit ranges upon request.

	(1)		(2)		(3)		(4)		(5)		(6)		(7)		(8)		(9)		(10)		(11)	
Order code		/		-		-		-		-		-		-		-		-		/		, ...[a]
Order example	604514	/	2280	-	1	-	040	-	070	-	100	-	0	-	26	-	350	-	4	/	574	

[a] List extra codes in sequence, separated by commas.

Stock versions

Order code	Design	Capillary length	Fitting length	Part no.
604514/2280-1-040-070-100-0-00-350-4/574, 711	With support tube	-	350 mm	60002161
604514/2280-2-040-070-100-1250-10-000-4/574, 711	With capillary	1250 mm	With capillary	60002162
604514/2280-1-040-070-100-0-26-350-4/574, 402	With support tube	-	350 mm	60002658

JUMO GmbH & Co. KG
Delivery address: Mackenrodtstraße 14
36039 Fulda, Germany
Postal address: 36035 Fulda, Germany
Phone: +49 661 6003-0
Fax: +49 661 6003-607
Email: mail@jumo.net
Internet: www.jumo.net

JUMO Instrument Co. Ltd.
JUMO House
Temple Bank, Riverway
Harlow, Essex, CM20 2DY, UK
Phone: +44 1279 63 55 33
Fax: +44 1279 62 50 29
Email: sales@jumo.co.uk
Internet: www.jumo.co.uk

JUMO Process Control, Inc.
6724 Joy Road
East Syracuse, NY 13057, USA
Phone: +1 315 437 5866
Fax: +1 315 437 5860
Email: info.us@jumo.net
Internet: www.jumousa.com

JUMO exTHERM-AT

Explosion-proof surface-mounted thermostat for zones 1, 2, 21, and 22

Special features

- Single thermostat and double thermostat with capillary or rigid thermowell
- Switching capacity up to 25 A
- Admissible ambient temperatures -55 to +70 °C (standard -40 to +70 °C)
- Thermowell for use in zone 0 available as an accessory
- Quick and safer electrical connection through Push-In® terminal technology
- Stable switching points through standard ambient temperature compensation

JUMO exTHERM-AT double thermostat

JUMO exTHERM-AT single thermostat

Brief description

The explosion-proof surface-mounted thermostats of the JUMO exTHERM series are built to monitor and control temperatures in potentially explosive areas. The use in environments with gas and steam is permitted (zones 1 and 2); use in environments with conductive dust (zones 21 and 22) is also permitted.

The JUMO exTHERM-AT is available as temperature monitor TW, safety temperature monitor (STW), and safety temperature limiter (STB). The thermostats work according to the liquid expansion or gas expansion principle. The electrical switching element is a pressure-resistant encapsulated thermostat with a snap-action switch. Stable switching points when ambient temperatures fluctuate are made possible by the standard ambient temperature compensation.

The thermostats of the JUMO exTHERM-AT series are RoHS conform and cadmium free.

Version according to DIN EN 14597:

TW	Temperature monitor
STW	Safety temperature monitor
STB	Safety temperature limiter

ATEX mark

Ex	**II 2G Ex db eb IIC T4/T5/T6 Gb** For explosive gas atmosphere
Ex	**II 2D Ex tb IIIC T85 °C/T100 °C/T130 °C Db** For explosive dust atmosphere

IECEx mark

IECEx	**Ex db eb IIC T4/T5/T6 Gb** For explosive gas atmosphere
IECEx	**Ex tb IIIC T85 °C/T100 °C/T130 °C Db** For explosive dust atmosphere

Test certificate ATEX	Test certificate IECEx
EPS 11 ATEX 1 354	**IECEx EPS 13.0046**

Test certificate EAC-Ex	Test certificate SIL
RU C-DE.HB07.B.00057/20	**EPS 11 ATEX 1 354** (SIL 2)

Approvals and approval marks (see technical data)

Ex EAC Ex * IECEx ** Safety Integrity Level SIL ***

* Available with extra code (TZ 240)
** Available with extra code (TZ 372)
*** Available with extra code (TZ 073)

JUMO GmbH & Co. KG
Delivery address: Mackenrodtstraße 14
36039 Fulda, Germany
Postal address: 36035 Fulda, Germany
Phone: +49 661 6003-0
Fax: +49 661 6003-607
Email: mail@jumo.net
Internet: www.jumo.net

JUMO Instrument Co. Ltd.
JUMO House
Temple Bank, Riverway
Harlow, Essex, CM20 2DY, UK
Phone: +44 1279 63 55 33
Fax: +44 1279 62 50 29
Email: sales@jumo.co.uk
Internet: www.jumo.co.uk

JUMO Process Control, Inc.
6724 Joy Road
East Syracuse, NY 13057, USA
Phone: +1 315 437 5866
Fax: +1 315 437 5860
Email: info.us@jumo.net
Internet: www.jumousa.com

Technical data

Switching functions

Temperature monitor TW and safety temperature monitor STW	Restart lock for the safety temperature limiter STB	Self-monitoring for the safety temperature monitor STW and safety temperature limiter STB
If the temperature on the temperature probe exceeds the setpoint value, the microswitch is activated by the transmission mechanics and the electrical circuit is opened or closed. If the temperature falls below the selected setpoint value (by the amount of the switching differential), the microswitch is reset to its initial position	If the temperature on the temperature probe exceeds the set limit value, the electrical circuit is opened and the microswitch is mechanically locked. The microswitch can be manually unlocked once the dangerous temperature of the setpoint value drops by approx. 20 % of the scale range.	If the measuring system is destroyed (i.e. if the expansion fluid escapes) the pressure in the membrane of the STB and STW drops and permanently opens the electrical circuit. Unlocking is then no longer possible. The electrical circuit opens when cooling the probe of STW (STB) and STB down to the negative temperature range, but it then closes again if the temperature rises. The STB must be unlocked manually if the minimum probe temperature is exceeded. The STW unlocks itself automatically.

Temperature compensation

When the ambient temperature on the switching head and the capillary deviates – from the calibration ambient temperature of 22 °C – a switching point offset occurs. This switching point offset is reduced to a minimum due to the temperature compensation.

Housing

Material	Polyester case, glass fiber reinforced, black (option: stainless steel) Due to the conductive soot-doped surface with a low surface resistance, static charging is not possible.
Protection type	EN 60529 - IP65 (polyester case), pollution level 2, IP 66 with extra code 861
Setpoint value adjustment	With screwdriver (once the case lid has been removed)
Switching head fastening	Using four screws (once the case lid has been removed)
Weight	Approx. 1200 g single thermostat/approx. 2000 g double thermostat
Cable inlet	Ex cable gland M20 × 1.5, sealing area 6 to 13 mm and Ex cable gland M25 × 1.5, sealing area 7 to 17 mm

Process connection

JUMO exTHERM-AT with capillary	Plain cylindrical probe (standard), rigid thermowell, spiral probe for room thermostat version

Accessories

JUMO exTHERM-AT	Multi-section standard thermowells made out of CrNi for use in zones 1, 2, 21, 22 (see data sheet 606710) Multi-section thermowells made out of CrNi for use in zone separation 0/1, 20/21 (see new data sheet 605057)

JUMO GmbH & Co. KG
Delivery address: Mackenrodtstraße 14
36039 Fulda, Germany
Postal address: 36035 Fulda, Germany
Phone: +49 661 6003-0
Fax: +49 661 6003-607
Email: mail@jumo.net
Internet: www.jumo.net

JUMO Instrument Co. Ltd.
JUMO House
Temple Bank, Riverway
Harlow, Essex, CM20 2DY, UK
Phone: +44 1279 63 55 33
Fax: +44 1279 62 50 29
Email: sales@jumo.co.uk
Internet: www.jumo.co.uk

JUMO Process Control, Inc.
6724 Joy Road
East Syracuse, NY 13057, USA
Phone: +1 315 437 5866
Fax: +1 315 437 5860
Email: info.us@jumo.net
Internet: www.jumousa.com

Operating data

Medium ambient temperature influence	When the ambient temperature on the switching head and/or the capillary deviates from the calibration ambient temperature of 22 °C, a switching point offset occurs. Higher ambient temperature = lower switching point Lower ambient temperature = higher switching point

Admissible storage temperature/ admissible ambient temperature when in use	-40 °C, optionally -60 to +70 °C (referring to T4, at 25 A max. 55 °C)
Max. probe temperature	+15 % of the limit value/max. adjustment value or 25 K
Rated position (NL)	According to DIN 16257, NL 0 to NL 90

Electrical data

Max. switching capacity	Selectable on the N/C contact (contact deck 1-2):	
	AC 400 V +10 %, 16 A	
	AC 230 V +10 %, 16 (2.5) A, cos φ = 1 (0.6)[a]	
	AC 230 V +10 %, 25 (4) A, cos φ = 1 (0.6)	
	DC 230 V +10 %, 0.25 A	
	Selectable on the N/O contact (contact deck 1-4):	
	TW, STW	STB
	AC 400 V +10 %, 6.3 A	AC 400 V +10 %, 2 A
	AC 230 V +10 %, 6.3 (2.5) A, cos φ = 1 (0.6)[a]	AC 230 V +10 %, 2 (0.4) A, cos φ = 1 (0.6)[a]
	AC 230 V +10 %, 2 (0.4) A, cos φ = 1 (0.6)	AC 230 V +10 %, 2 (0.4) A, cos φ = 1 (0.6)
	DC 230 V +10 %, 0.25 A	AC 230 V +10 %, 0.25 A
	Snap-action switch, gold-plated AC/DC = 24 V, 0.1 A	
Min. switching capacity	To ensure the greatest possible switching reliability we recommend a minimum load of: AC/DC = 24 V, 100 mA for silver contacts AC/DC = 10 V, 5 mA for gold-plated contacts	

[a] standard

Capillary and temperature probe

Type	**Capillary Ø 1.5 mm**	**Temperature probe**
JUMO exTHERM-AT	Stainless steel (CrNi) 1.4571	Stainless steel (CrNi) 1.4571, welded
Capillary length	Max. 5000 mm	
Capillary bending radius	≥ 5 mm	

JUMO GmbH & Co. KG
Delivery address: Mackenrodtstraße 14
36039 Fulda, Germany
Postal address: 36035 Fulda, Germany
Phone: +49 661 6003-0
Fax: +49 661 6003-607
Email: mail@jumo.net
Internet: www.jumo.net

JUMO Instrument Co. Ltd.
JUMO House
Temple Bank, Riverway
Harlow, Essex, CM20 2DY, UK
Phone: +44 1279 63 55 33
Fax: +44 1279 62 50 29
Email: sales@jumo.co.uk
Internet: www.jumo.co.uk

JUMO Process Control, Inc.
6724 Joy Road
East Syracuse, NY 13057, USA
Phone: +1 315 437 5866
Fax: +1 315 437 5860
Email: info.us@jumo.net
Internet: www.jumousa.com

Control ranges and probe table

Control range	Max. capillary length	Probe length „L“				
		For „d“ = 4 mm		For „d“ = 6 mm		
		TW	STW, STB	TW	STW	STB
		Hysteresis				
in °C	in mm	Approx. 2.5 %	Approx. 7 %	Approx. 2.5 %	Approx. 7 %	-
-20 to +50	5000	-	-	138	81	81
0 to 120	5000	203	115	90	65	65
0 to 190	5000	136	79	71	52	-
60 to 300	3000	-	-	-	155	-
20 to 500	5000	-	-	278	-	-
140 to 500	5000	-	-	-	133	133
70 to 190	5000	-	99	-	59	59
20 to 400	3000	-	-	155	-	-
150 to 300	3000	-	-	-	-	155

Switching point tolerance in the middle section of the scale

Control range in °C	TW in K	STW upward adjustment in K	STW downward adjustment in K	STB in K
-20 to +40 (spiral probe)	+2/-2	-	-	-
-20 to +50	+3/-3	+0/-5	+5/-0	-
0 to 120	+5/-5	+0/-10	+10/-0	+0/-10
0 to 190	+8/-8	+0/-16	+16/-0	-
70 to 190	-	+0/-16	+16/-0	+0/-16
130 to 190	-	-	-	+0/-16
20 to 400	+18/-18	-	-	-
60 to 300	-	+0/-36	+36/-0	-
150 to 300	-	-	-	+0/-36
140 to 500	-	+0/-44	+44/-0	+0/-44
20 to 500	+22/-22	-	-	-
Temperature monitors (TW) and safety temperature monitors (STW) are adjusted ascendingly in the middle section of the scale as standard procedure. Safety temperature limiters (STB) are adjusted in the upper section of the scale. Special adjustments are possible upon request.				

JUMO GmbH & Co. KG
Delivery address: Mackenrodtstraße 14
36039 Fulda, Germany
Postal address: 36035 Fulda, Germany
Phone: +49 661 6003-0
Fax: +49 661 6003-607
Email: mail@jumo.net
Internet: www.jumo.net

JUMO Instrument Co. Ltd.
JUMO House
Temple Bank, Riverway
Harlow, Essex, CM20 2DY, UK
Phone: +44 1279 63 55 33
Fax: +44 1279 62 50 29
Email: sales@jumo.co.uk
Internet: www.jumo.co.uk

JUMO Process Control, Inc.
6724 Joy Road
East Syracuse, NY 13057, USA
Phone: +1 315 437 5866
Fax: +1 315 437 5860
Email: info.us@jumo.net
Internet: www.jumousa.com

Approvals and approval marks

ATEX	
Testing agency	Bureau Veritas
Certificate/certification numbers	EPS 11 ATEX 1 354
Inspection basis	EN IEC 60079-0, EN 60079-1, EN IEC 60079-7, EN 60079-26, EN 60079-31, EN 50495, EN ISO 80079-37
Valid for	Type 605055/...
IECEx	
Testing agency	Bureau Veritas
Certificate/certification numbers	IECEx EPS 13.0046
Inspection basis	IEC 60079-0, IEC 60079-1, IEC 60079-31, IEC 60079-7
Valid for	Type 605055/... with extra code 372
EAC-Ex[a]	
Testing agency	Profitext Limited Liability Company, Moscow
Certificate/certification numbers	RU C-DE.HB07.B00057/20
Inspection basis	TR ZU 012/2011 (Ex)
Valid for	Typ 605055/... with extra code 240
UA TR	
Testing agency	SERTIS-CENTER
Certificate/certification numbers	СЦ 21.0635
Inspection basis	DSTU EN 60079-0, DSTU EN 60079-1, DSTU EN 60079-7, DSTU EN 60079-31
Valid for	Type 605055/...
SIL	
Testing agency	Bureau Veritas
Certificate/certification numbers	EPS 11 ATEX 1 354
Inspection basis	DIN EN 50495
Valid for	Type 605055/... with extra code 073

[a] Russian documentation on request

JUMO GmbH & Co. KG
Delivery address: Mackenrodtstraße 14
36039 Fulda, Germany
Postal address: 36035 Fulda, Germany
Phone: +49 661 6003-0
Fax: +49 661 6003-607
Email: mail@jumo.net
Internet: www.jumo.net

JUMO Instrument Co. Ltd.
JUMO House
Temple Bank, Riverway
Harlow, Essex, CM20 2DY, UK
Phone: +44 1279 63 55 33
Fax: +44 1279 62 50 29
Email: sales@jumo.co.uk
Internet: www.jumo.co.uk

JUMO Process Control, Inc.
6724 Joy Road
East Syracuse, NY 13057, USA
Phone: +1 315 437 5866
Fax: +1 315 437 5860
Email: info.us@jumo.net
Internet: www.jumousa.com

Connection diagram

The connection diagram in the data sheet provides preliminary information about the connection options. For the electrical connection, only use the installation instructions or the operating manual. The knowledge and the correct technical compliance with the safety information and warnings contained in these documents are mandatory for mounting, electrical connection, and startup as well as for safety during operation.

JUMO exTHERM-AT	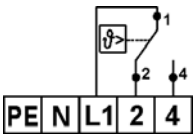 TW/STW	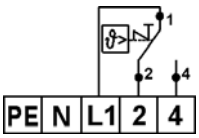 STB	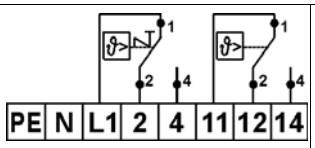 STB/TW/STW	ϑ> = upward adjust-ment ϑ< = downward adjust-ment

Dimensions

Single thermostat

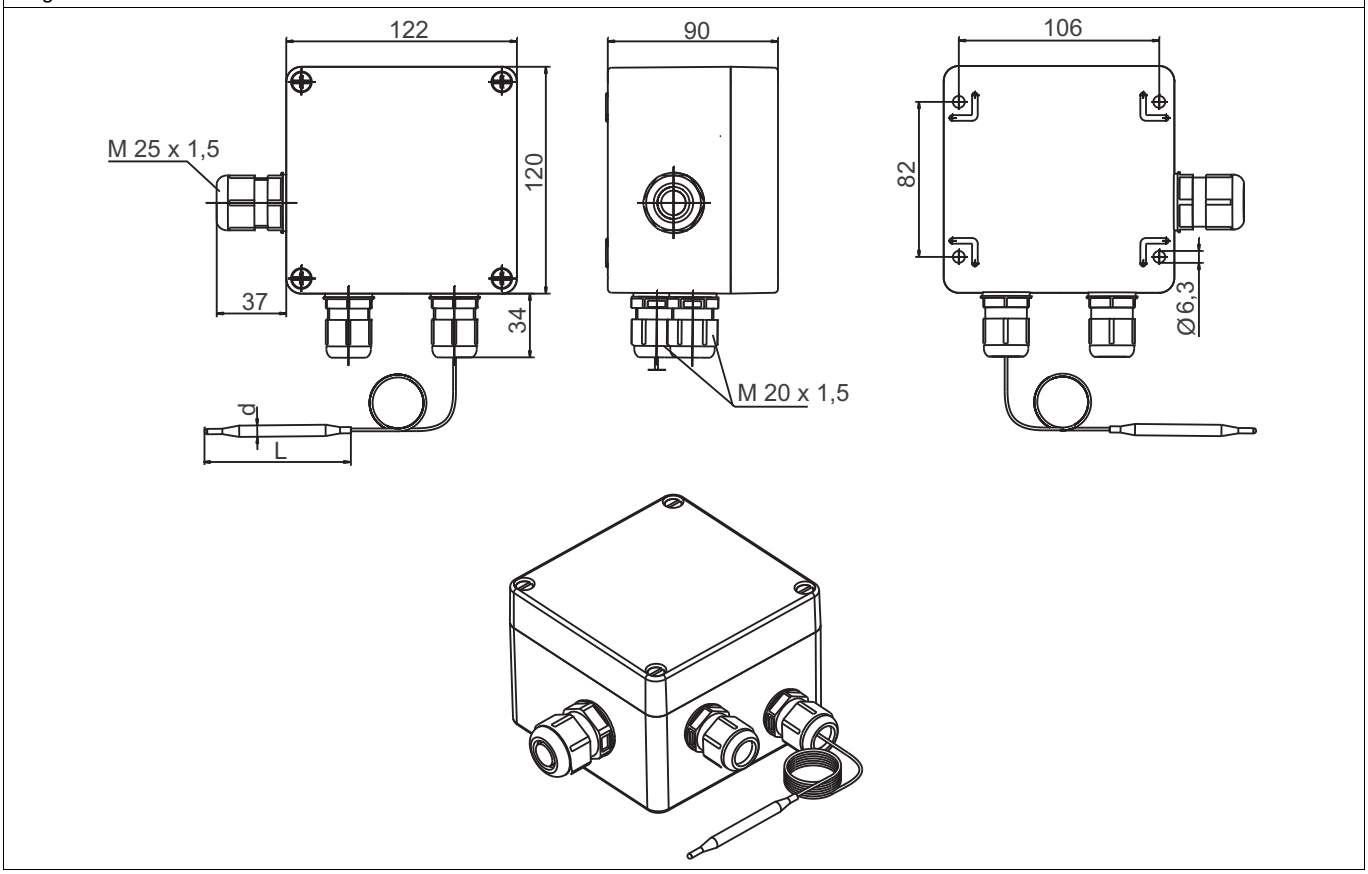

JUMO GmbH & Co. KG
Delivery address: Mackenrodtstraße 14
36039 Fulda, Germany
Postal address: 36035 Fulda, Germany
Phone: +49 661 6003-0
Fax: +49 661 6003-607
Email: mail@jumo.net
Internet: www.jumo.net

JUMO Instrument Co. Ltd.
JUMO House
Temple Bank, Riverway
Harlow, Essex, CM20 2DY, UK
Phone: +44 1279 63 55 33
Fax: +44 1279 62 50 29
Email: sales@jumo.co.uk
Internet: www.jumo.co.uk

JUMO Process Control, Inc.
6724 Joy Road
East Syracuse, NY 13057, USA
Phone: +1 315 437 5866
Fax: +1 315 437 5860
Email: info.us@jumo.net
Internet: www.jumousa.com

Double thermostat

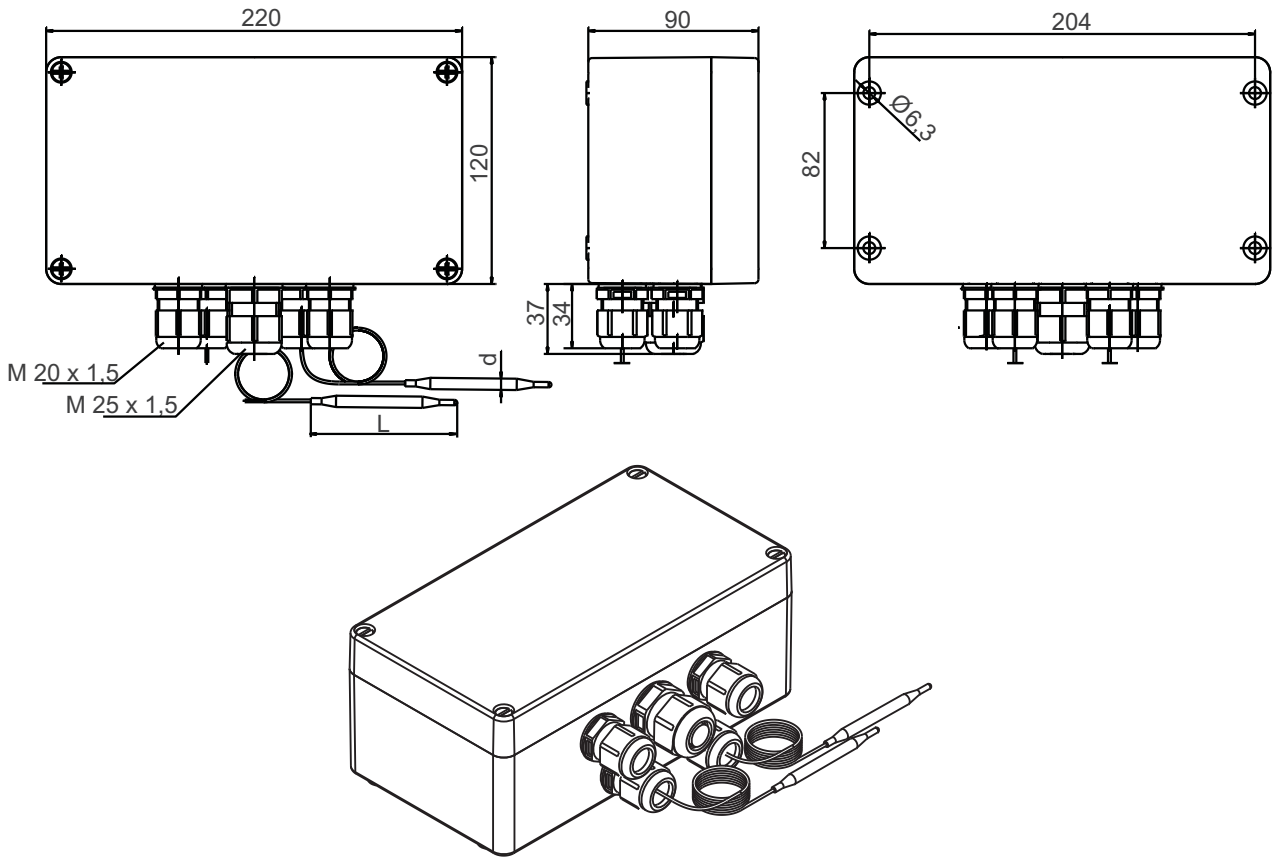

JUMO GmbH & Co. KG
Delivery address: Mackenrodtstraße 14
36039 Fulda, Germany
Postal address: 36035 Fulda, Germany
Phone: +49 661 6003-0
Fax: +49 661 6003-607
Email: mail@jumo.net
Internet: www.jumo.net

JUMO Instrument Co. Ltd.
JUMO House
Temple Bank, Riverway
Harlow, Essex, CM20 2DY, UK
Phone: +44 1279 63 55 33
Fax: +44 1279 62 50 29
Email: sales@jumo.co.uk
Internet: www.jumo.co.uk

JUMO Process Control, Inc.
6724 Joy Road
East Syracuse, NY 13057, USA
Phone: +1 315 437 5866
Fax: +1 315 437 5860
Email: info.us@jumo.net
Internet: www.jumousa.com

Room thermostat

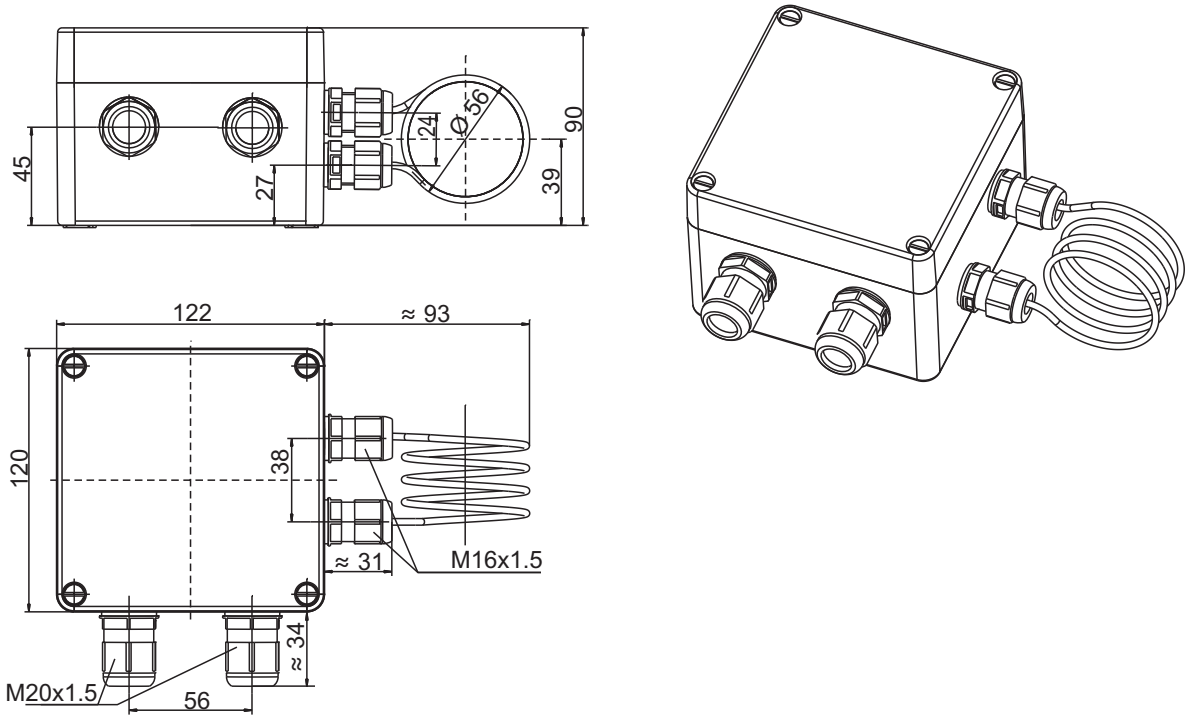

JUMO GmbH & Co. KG
Delivery address: Mackenrodtstraße 14
36039 Fulda, Germany
Postal address: 36035 Fulda, Germany
Phone: +49 661 6003-0
Fax: +49 661 6003-607
Email: mail@jumo.net
Internet: www.jumo.net

JUMO Instrument Co. Ltd.
JUMO House
Temple Bank, Riverway
Harlow, Essex, CM20 2DY, UK
Phone: +44 1279 63 55 33
Fax: +44 1279 62 50 29
Email: sales@jumo.co.uk
Internet: www.jumo.co.uk

JUMO Process Control, Inc.
6724 Joy Road
East Syracuse, NY 13057, USA
Phone: +1 315 437 5866
Fax: +1 315 437 5860
Email: info.us@jumo.net
Internet: www.jumousa.com

Thermostat with rigid thermowell (process connection 74)

Thermowells can be ordered separately according to data sheet 605057 (**with** ATEX approval) or data sheet 606710 (**without** ATEX approval)

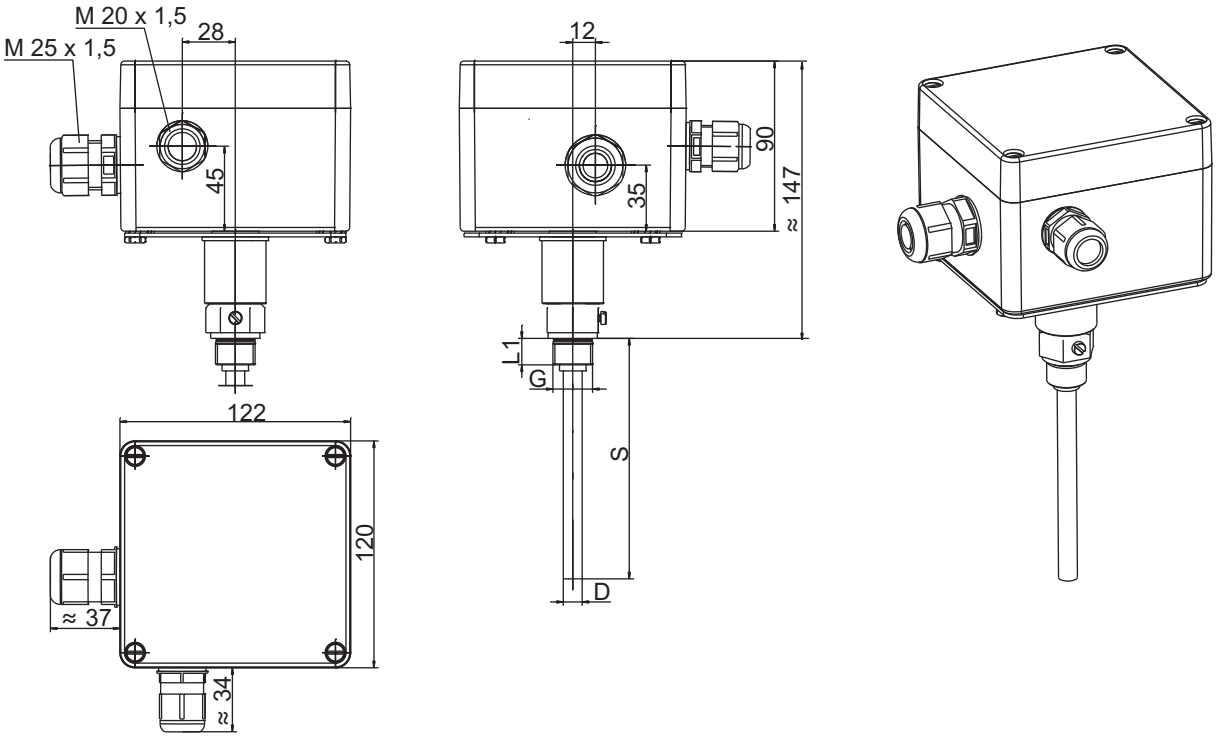

Thermostat with sleeve and heat sink, limit value > 150 to 300 °C

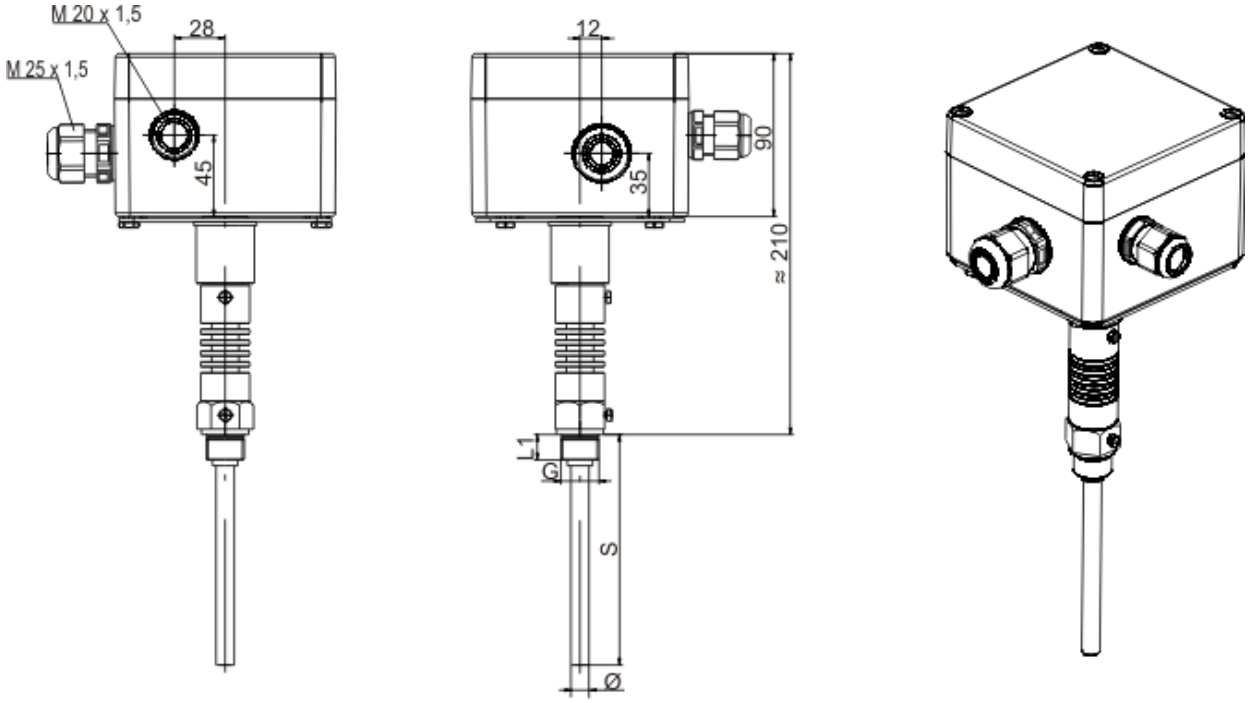

JUMO GmbH & Co. KG
Delivery address: Mackenrodtstraße 14
36039 Fulda, Germany
Postal address: 36035 Fulda, Germany
Phone: +49 661 6003-0
Fax: +49 661 6003-607
Email: mail@jumo.net
Internet: www.jumo.net

JUMO Instrument Co. Ltd.
JUMO House
Temple Bank, Riverway
Harlow, Essex, CM20 2DY, UK
Phone: +44 1279 63 55 33
Fax: +44 1279 62 50 29
Email: sales@jumo.co.uk
Internet: www.jumo.co.uk

JUMO Process Control, Inc.
6724 Joy Road
East Syracuse, NY 13057, USA
Phone: +1 315 437 5866
Fax: +1 315 437 5860
Email: info.us@jumo.net
Internet: www.jumousa.com

Double thermostat with sleeve (process connection 74)

Thermowells can be ordered separately according to data sheet 605057 (**with** ATEX approval) or data sheet 606710 (**without** ATEX approval)

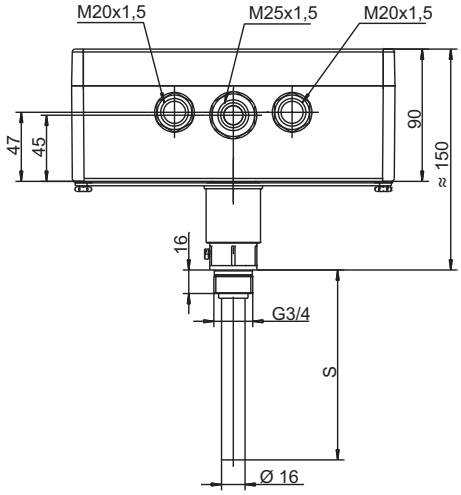

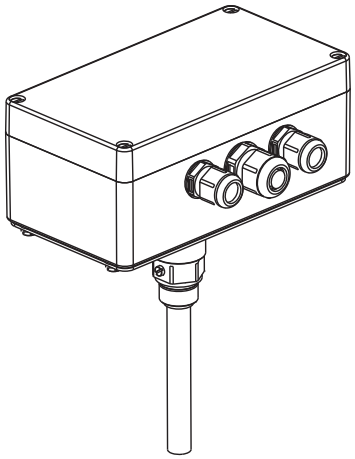

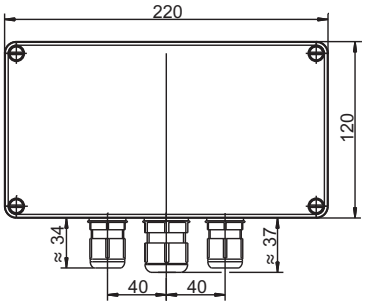

Double thermostat with sleeve and heat sink, limit value > 150 to 300 °C

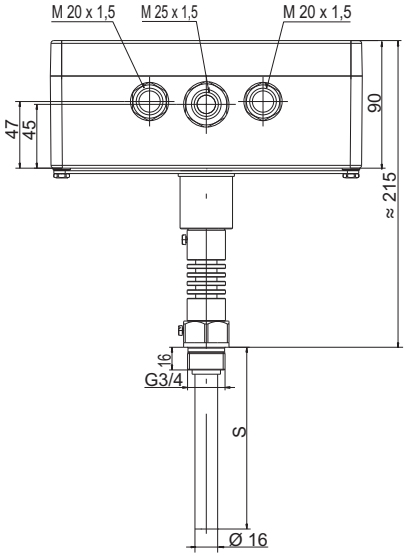

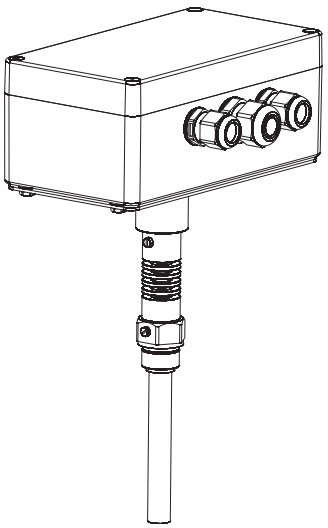

JUMO GmbH & Co. KG
Delivery address: Mackenrodtstraße 14
36039 Fulda, Germany
Postal address: 36035 Fulda, Germany
Phone: +49 661 6003-0
Fax: +49 661 6003-607
Email: mail@jumo.net
Internet: www.jumo.net

JUMO Instrument Co. Ltd.
JUMO House
Temple Bank, Riverway
Harlow, Essex, CM20 2DY, UK
Phone: +44 1279 63 55 33
Fax: +44 1279 62 50 29
Email: sales@jumo.co.uk
Internet: www.jumo.co.uk

JUMO Process Control, Inc.
6724 Joy Road
East Syracuse, NY 13057, USA
Phone: +1 315 437 5866
Fax: +1 315 437 5860
Email: info.us@jumo.net
Internet: www.jumousa.com

Order details

	(1)	**Basic type**			
605055		JUMO exTHERM-AT – Explosion-proof surface-mounted thermostat for zones 1, 2, 21, and 22			
	(2)	**Basic type extension**			
0002		Temperature monitor (TW)			
0020		Safety temperature monitor (STW)			
0070		Safety temperature limiter (STB)			
0270		Temperature monitor/Safety temperature limiter (TW/STB)			
2070		Safety temperature monitor/Safety temperature limiter (STW/STB)			
	(3)	**Design type**			
5		Surface-mounted thermostat			
6		Room thermostat			
	(4)	**Housing**			
4		Polyester case black (standard)			
6		Stainless steel housing			
	(5)	**Control range (TW)**			
013		-20 to +40 °C			
014		-20 to +50 °C			
026		0 to 120 °C			
045		20 to 400 °C			
195		0 to 190 °C			
427		60 to 300 °C			
429		70 to 190 °C			
532		130 to 190 °C			
539		140 to 500 °C			
553		150 to 300 °C			
	(6)	**Limit value range (STB)**			
000		Only single thermostat			
014		-20 to +50 °C			
026		0 to 120 °C			
045		20 to 400 °C			
195		0 to 190 °C			
427		60 to 300 °C only STB gas filling			
429		70 to 190 °C			
532		130 to 190 °C			
539		140 to 500 °C			
553		150 to 300 °C			
	(7)	**Switching capacity**			
11		AC/DC 24 V, 0.1 A			
21		AC 230 V, 16 (2.5) A, cos φ = 1 (0.6)			
25		AC 230 V, 25 (4) A, cos φ = 1 (0.6)			
41		AC 400 V, 16 A			
	(8)	**Admissible ambient temperature at the housing**			
340		-55 to +40 °C	T6	(+70 °C T4)	(+55 °C T4 at 25 A)
467		-40 to +40 °C	T6	(+70 °C T4)	(+55 °C T4 at 25 A)
	(9)	**Switching differential**			
00		None			
25		Approx. 2.5 %			
70		Approx. 7 %			

JUMO GmbH & Co. KG
Delivery address: Mackenrodtstraße 14
36039 Fulda, Germany
Postal address: 36035 Fulda, Germany
Phone: +49 661 6003-0
Fax: +49 661 6003-607
Email: mail@jumo.net
Internet: www.jumo.net

JUMO Instrument Co. Ltd.
JUMO House
Temple Bank, Riverway
Harlow, Essex, CM20 2DY, UK
Phone: +44 1279 63 55 33
Fax: +44 1279 62 50 29
Email: sales@jumo.co.uk
Internet: www.jumo.co.uk

JUMO Process Control, Inc.
6724 Joy Road
East Syracuse, NY 13057, USA
Phone: +1 315 437 5866
Fax: +1 315 437 5860
Email: info.us@jumo.net
Internet: www.jumousa.com

	(10)	**Switching differential 2**
00		None
25		Approx. 2.5 %
70		Approx. 7 %
	(11)	**Capillary length**
0		0 mm
1000		1,000 mm
3000		3,000 mm
	(12)	**Capillary length 2**
0		0 mm
1000		1,000 mm
3000		3,000 mm
	(13)	**Capillary material**
20		CrNi
	(14)	**Process connection**
10		Plain cylindrical probe
15		Spiral probe
74		Mounting adaptor for thermowell
	(15)	**Probe diameter**
4		4 mm
6		6 mm
56		56 mm
	(16)	**Probe diameter 2**
0		Only single thermostat
4		4 mm
6		6 mm
	(17)	**Insertion length EL in mm**
0		Only probe
100		100 mm
150		150 mm
200		200 mm
300		300 mm
	(18)	**Extra codes**
000		None
073		SIL and IPL approval
083		PESO (India)
084		CCC-Ex (China)
240		EAC-Ex approval
372		IECEx-protection type according to IEC 60079..
861		Protection type IP66 according to DIN EN 60529

	(1)		(2)		(3)		(4)		(5)		(6)		(7)		(8)		(9)		(10)	
Order code		/		-		-		-		-		-		-		-		-		-
Order example	605055	/	0020	-	5	-	4	-	195	-	000	-	21	-	467	-	70	-	00	-

	(11)		(12)		(13)		(14)		(15)		(16)		(17)		(18)
		-		-		-		-		-		-		/	
	1000	-	0	-	20	-	10	-	6	-	0	-	0	/	000

JUMO GmbH & Co. KG
Delivery address: Mackenrodtstraße 14
36039 Fulda, Germany
Postal address: 36035 Fulda, Germany
Phone: +49 661 6003-0
Fax: +49 661 6003-607
Email: mail@jumo.net
Internet: www.jumo.net

JUMO Instrument Co. Ltd.
JUMO House
Temple Bank, Riverway
Harlow, Essex, CM20 2DY, UK
Phone: +44 1279 63 55 33
Fax: +44 1279 62 50 29
Email: sales@jumo.co.uk
Internet: www.jumo.co.uk

JUMO Process Control, Inc.
6724 Joy Road
East Syracuse, NY 13057, USA
Phone: +1 315 437 5866
Fax: +1 315 437 5860
Email: info.us@jumo.net
Internet: www.jumousa.com

Stock versions

Designation	Control range (TW)	Capillary length	Probe diameter	Part no.
605055/002-6-4-013-00-21-467-25-00-0-0-20-15-56-0-0/000	-20 to +40 °C	0 mm	56 mm	60003366
605055/0020-5-4-014-000-21-467-70-00-1000-0-20-10-6-0-0/000	-20 to +50 °C	1000 mm	6 mm	60003365
605055/0020-5-4-026-000-21-467-70-00-1000-0-20-10-6-0-0/000	0 to 120 °C	1000 mm	6 mm	60003367
605055/0070-5-4-026-000-21-467-00-00-1000-0-20-10-6-0-0/000	0 to 120 °C	1000 mm	6 mm	60003421
605055/0070-5-4-429-000-21-467-00-00-1000-0-20-10-6-0-0/000	70 to 190 °C	1000 mm	6 mm	60003423
605055/0020-5-4-195-000-21-467-70-00-1000-0-20-10-6-0-0/000	0 to 190 °C	1000 mm	6 mm	60003424
605055/0002-5-4-195-000-21-467-25-00-1000-0-20-10-6-0-0/000	0 to 190 °C	1000 mm	6 mm	60003425
605055/0020-5-4-427-000-21-467-70-00-1000-0-20-10-6-0-0/000	60 to 300 °C	1000 mm	6 mm	60003426

JUMO GmbH & Co. KG
Delivery address: Mackenrodtstraße 14
36039 Fulda, Germany
Postal address: 36035 Fulda, Germany
Phone: +49 661 6003-0
Fax: +49 661 6003-607
E-mail: mail@jumo.net
Internet: www.jumo.net

JUMO Instrument Co. Ltd.
JUMO House
Temple Bank, Riverway
Harlow, Essex CM20 2DY, UK
Phone: +44 1279 635533
Fax: +44 1279 635262
E-mail: sales@jumo.co.uk
Internet: www.jumo.co.uk

JUMO Process Control, Inc.
6733 Myers Road
East Syracuse, NY 13057, USA
Phone: 315-437-5866
1-800-554-5866
Fax: 315-437-5860
E-mail: info.us@jumo.net
Internet: www.jumousa.com

ATEX Thermowell
for Zone Separation 0/1 or 20/21
with Standard Acceptance Inspection Certificate 3.1 Acc. to DIN EN 10204

Special features

- Zone separation 0/1 or 20/21
- As screw-in sleeve or weld-in sleeve
- Insertion lengths 100, 150, 200, and 300 mm available directly from the factory
- Special lengths are available upon request

Brief description

ATEX thermowells made of stainless steel are used for the separation of zones 0 and 1 or 20 and 21. Screw-in sleeves or weld-in sleeves are available from the factory in insertion lengths 100 mm, 150 mm, 200 mm, and 300 mm. Special lengths up to 500 mm can be manufactured specifically for an application.

Ex identification

II 1/2 G Ex Ga/Gb
II 1/2 D Ex Da/Db

Test confirmation

EPS 12 ATEX 1 423 U

Approvals/approval marks

JUMO GmbH & Co. KG
Delivery address: Mackenrodtstraße 14
36039 Fulda, Germany
Postal address: 36035 Fulda, Germany
Phone: +49 661 6003-0
Fax: +49 661 6003-607
E-mail: mail@jumo.net
Internet: www.jumo.net

JUMO Instrument Co. Ltd.
JUMO House
Temple Bank, Riverway
Harlow, Essex CM20 2DY, UK
Phone: +44 1279 635533
Fax: +44 1279 635262
E-mail: sales@jumo.co.uk
Internet: www.jumo.co.uk

JUMO Process Control, Inc.
6733 Myers Road
East Syracuse, NY 13057, USA
Phone: 315-437-5866
1-800-554-5866
Fax: 315-437-5860
E-mail: info.us@jumo.net
Internet: www.jumousa.com

Technical data

Thermowells made of stainless steel

Material	Thermowell and nipple (pipe connector): stainless steel (1.4571)

Max. admissible operating temperature *	Temperature °C	Thermowell-Ø	
		10 x 1.5 mm	16 x 1.5 mm
		Maximum admissible pressure in bar	
	100	74	50
	150	71	48
	200	67	45
	300	58	39
	400	54	36
Without load capacity	530	0	0

*observe maximum admissible probe temperature of the respective thermostat version!

JUMO GmbH & Co. KG
Delivery address: Mackenrodtstraße 14
36039 Fulda, Germany
Postal address: 36035 Fulda, Germany
Phone: +49 661 6003-0
Fax: +49 661 6003-607
E-mail: mail@jumo.net
Internet: www.jumo.net

JUMO Instrument Co. Ltd.
JUMO House
Temple Bank, Riverway
Harlow, Essex CM20 2DY, UK
Phone: +44 1279 635533
Fax: +44 1279 635262
E-mail: sales@jumo.co.uk
Internet: www.jumo.co.uk

JUMO Process Control, Inc.
6733 Myers Road
East Syracuse, NY 13057, USA
Phone: 315-437-5866
1-800-554-5866
Fax: 315-437-5860
E-mail: info.us@jumo.net
Internet: www.jumousa.com

Approvals/approval marks

ATEX	EN 600079
Acceptance inspection certificate 3.1	DIN EN 10204

Dimensions

Thermowells	Weld-in sleeve	Screw-in sleeve
	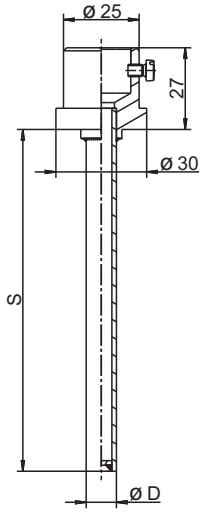	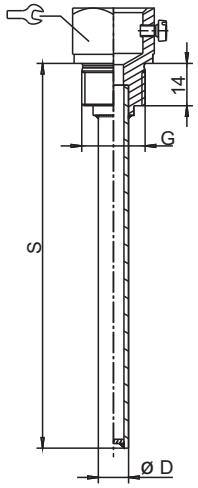

JUMO GmbH & Co. KG
Delivery address: Mackenrodtstraße 14
36039 Fulda, Germany
Postal address: 36035 Fulda, Germany
Phone: +49 661 6003-0
Fax: +49 661 6003-607
E-mail: mail@jumo.net
Internet: www.jumo.net

JUMO Instrument Co. Ltd.
JUMO House
Temple Bank, Riverway
Harlow, Essex CM20 2DY, UK
Phone: +44 1279 635533
Fax: +44 1279 635262
E-mail: sales@jumo.co.uk
Internet: www.jumo.co.uk

JUMO Process Control, Inc.
6733 Myers Road
East Syracuse, NY 13057, USA
Phone: 315-437-5866
1-800-554-5866
Fax: 315-437-5860
E-mail: info.us@jumo.net
Internet: www.jumousa.com

Order details

ATEX thermowell for zone separation 0/1 or 20/21
with standard acceptance certificate 3.1 acc. to DIN EN 10204

Order code		
	(1)	**Basic type**
605057		ATEX thermowell for zone separation 0/1 or 20/21
	(2)	**Basic type extension** process connection
20		Screw-in thermowell
22		Weld-in thermowell
	(3)	**Thread type G**
00		Without thread (weld-in sleeve)
13		G 1/2
	(4)	**Material**
20		CrNi Stainless steel
	(5)	**Insertion length S** in mm
100		100
150		150
200		200
300		300
. . .		Special length (specifications in plain text - 50 mm steps)
	(6)	**Thermowell-Ø D**
10		10 mm (for the installation of a temperature probe)
16		16 mm (for the installation of 2 temperature probes, including pressure spring)
	(7)	**Extra codes**
374		Acceptance inspection certificate 3.1 Material

Order code:

(1)		(2)		(3)		(4)		(5)		(6)		(7)
605057	/	. .	-	. .	-	. .	-	. . .	-	. .	/	. . .

Order example:

605057	/	20	-	13	-	20	-	200	-	10	/	374

Stock versions

Part no.	Type	Process connection	Thread	Material	Insertion length S mm	Thermowell-Ø
60003376	605057/20-13-20-100-10/374	Screw-in thermowell	G 1/2	CrNi	100	10 mm (for the installation of a temperature probe)
60003396	605057/20-13-20-150-10/374				150	
60003377	605057/20-13-20-200-10/374				200	
60003378	605057/20-13-20-300-10/374				300	
60003379	605057/22-00-20-100-10/374	Weld-in thermowell	Without thread		100	
60003397	605057/22-00-20-150-10/374				150	
60003380	605057/22-00-20-200-10/374				200	
60003381	605057/22-00-20-300-10/374				300	

JUMO GmbH & Co. KG
Delivery address: Mackenrodtstraße 14
36039 Fulda, Germany
Postal address: 36035 Fulda, Germany
Phone: +49 661 6003-0
Fax: +49 661 6003-607
E-mail: mail@jumo.net
Internet: www.jumo.net

JUMO Instrument Co. Ltd.
JUMO House
Temple Bank, Riverway
Harlow, Essex CM20 2DY, UK
Phone: +44 1279 635533
Fax: +44 1279 635262
E-mail: sales@jumo.co.uk
Internet: www.jumo.co.uk

JUMO Process Control, Inc.
6733 Myers Road
East Syracuse, NY 13057, USA
Phone: 315-437-5866
1-800-554-5866
Fax: 315-437-5860
E-mail: info.us@jumo.net
Internet: www.jumousa.com

Process connections for thermostats

- Temperature probes
- Screw fittings
- Pockets

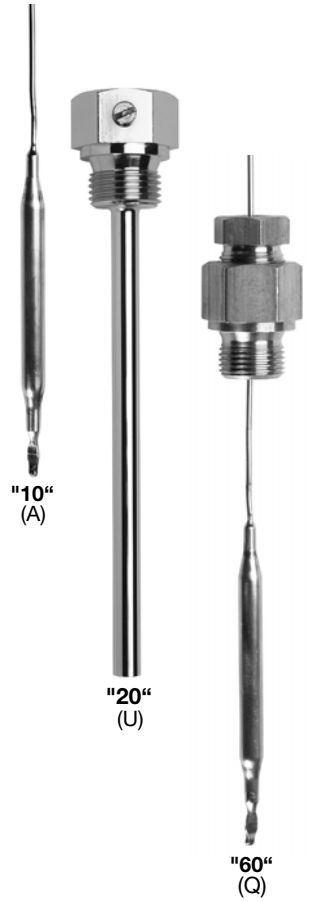

Temperature probe

Order code:	**1**	**2**		**3**				
Process connection		Material		Probe Ø in mm				Remark
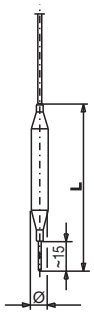	**Plain cylindrical probe "10"** (A)	Cu (Copper)	CrNi (stainless steel)	5	6	7	8	different probe diameters on request
Order code:	606710-**10**	40	20	5	6	7	8	
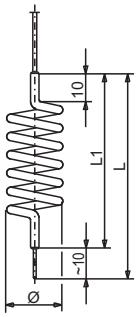	**Spiral probe "15"** (H)	Cu (Copper)		17		35		up to max. +200°C probe temperature
Order code:	606710-**15**	40		17		35		

	1		**2**		**3**
Order code:	606710-. .	-	. .	-	.
Order example:	606710-**10**	-	20	-	8

JUMO GmbH & Co. KG
Delivery address: Mackenrodtstraße 14
36039 Fulda, Germany
Postal address: 36035 Fulda, Germany
Phone: +49 661 6003-0
Fax: +49 661 6003-607
E-mail: mail@jumo.net
Internet: www.jumo.net

JUMO Instrument Co. Ltd.
JUMO House
Temple Bank, Riverway
Harlow, Essex CM20 2DY, UK
Phone: +44 1279 635533
Fax: +44 1279 635262
E-mail: sales@jumo.co.uk
Internet: www.jumo.co.uk

JUMO Process Control, Inc.
6733 Myers Road
East Syracuse, NY 13057, USA
Phone: 315-437-5866
1-800-554-5866
Fax: 315-437-5860
E-mail: info.us@jumo.net
Internet: www.jumousa.com

Screw-connections

Order code:	**1**	**2**			**3**		**4**	**5**				**6**	
Process connection		Thread G			Connection material		Immersion tube length "S" in mm	Probe Ø in mm				Probe material	
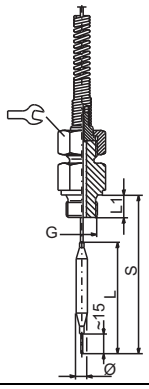	**Double screw-connection for union nut "50“** (B)	G $^1/_2$ L_1=14 27	G $^3/_8$ L_1=12 22	G $^3/_4$ L_1=16 32	CuZn (brass)	CrNi (stainless steel)	100 120 150 200 300 400 Specifications in plain text	5	6	7	8	Cu (Copper)	CrNi (stainless steel)
Order code:	606710-**50**	13	12	14	46	20	. . .	5	6	7	8	40	20
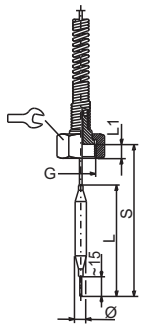	**Union nut "52“** (C) Plain cylindrical probe, with collar and union nut. Collar soldered or welded to capillary.	G $^1/_2$ L_1=10 27	G $^3/_8$ L_1=7.5 22	G $^3/_4$ L_1=11 32	CuZn (brass)	CrNi (stainless steel)	100 120 150 200 300 400 Specifications in plain text	5	6	7	8	Cu (Copper)	CrNi (stainless steel)
Order code:	606710-**52**	13	12	14	46	20	. . .	5	6	7	8	40	20
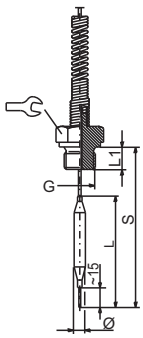	**fixed screw-connection with hexagon "54“** (D) Plain cylindrical probe, thread piece soldered or welded to capillary.	G $^1/_2$ L_1=14 27	G $^3/_8$ L_1=12 22		CuZn (brass)	CrNi (stainless steel)	100 120 150 200 300 400 Specifications in plain text	5	6	7	8	Cu (Copper)	CrNi (stainless steel)
Order code:	606710-**54**	13	12		46	20	. . .	5	6	7	8	40	20

Process connections "50“ (B), "52“ (C) and "54“ (D): max. admissible pressure for device functions STB, STW (STB) = 2 bar / TR, TW and TB on request.

	1	-	**2**	-	**3**	-	**4**	-	**5**	-	**6**
Order code:	606710-. .	-	. .	-	. .	-	. . .	-	. .	-	. .
Order example:	606710-**50**	-	13	-	20	-	200	-	6	-	20

JUMO GmbH & Co. KG
Delivery address: Mackenrodtstraße 14
36039 Fulda, Germany
Postal address: 36035 Fulda, Germany
Phone: +49 661 6003-0
Fax: +49 661 6003-607
E-mail: mail@jumo.net
Internet: www.jumo.net

JUMO Instrument Co. Ltd.
JUMO House
Temple Bank, Riverway
Harlow, Essex CM20 2DY, UK
Phone: +44 1279 635533
Fax: +44 1279 635262
E-mail: sales@jumo.co.uk
Internet: www.jumo.co.uk

JUMO Process Control, Inc.
6733 Myers Road
East Syracuse, NY 13057, USA
Phone: 315-437-5866
1-800-554-5866
Fax: 315-437-5860
E-mail: info.us@jumo.net
Internet: www.jumousa.com

Screw-connections

Order code:	**1**	**2**		**3**		
Process connection		Thread G		Material		Remarks
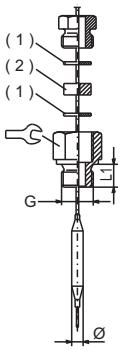	**Double screw-connection "60“** (Q) for retrofitting to the capillary. Probe temperature max. +200°C. (1) Washer (2) Seal	G $^1/_2$ L_1=14 27	G $^3/_8$ L_1=12 22	CuZn (brass)	CrNi (stainless steel)	Suitable for probe Ø up to 8 mm. Use **only** in pressureless medium.
Order code:	606710-**60**	13	12	46	20	
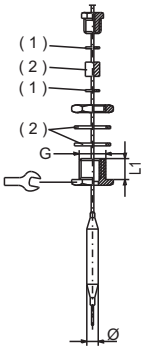	**Stuffing box screw-connection "65“** (V) for retrofitting to the capillary. Probe temperature max. +200°C. (1) Washer (2) Seal	M 14 x 1 19		CuZn (brass)	CrNi (stainless steel)	Suitable for probe Ø up to 6 mm. Use **only** in pressureless medium.
Order code:	606710-**65**	35		46	20	

	1		**2**		**3**
Order code:	606710-**. .**	-	. .	-	. .
Order example:	606710-**60**	-	13	-	20

JUMO GmbH & Co. KG
Delivery address: Mackenrodtstraße 14
36039 Fulda, Germany
Postal address: 36035 Fulda, Germany
Phone: +49 661 6003-0
Fax: +49 661 6003-607
E-mail: mail@jumo.net
Internet: www.jumo.net

JUMO Instrument Co. Ltd.
JUMO House
Temple Bank, Riverway
Harlow, Essex CM20 2DY, UK
Phone: +44 1279 635533
Fax: +44 1279 635262
E-mail: sales@jumo.co.uk
Internet: www.jumo.co.uk

JUMO Process Control, Inc.
6733 Myers Road
East Syracuse, NY 13057, USA
Phone: 315-437-5866
1-800-554-5866
Fax: 315-437-5860
E-mail: info.us@jumo.net
Internet: www.jumousa.com

Sheaths

Order code:	**1**	**2**		**3**		**4**	**5**		
Process connection		Thread G		Material		Immersion tube length "S" in mm	Immersion tube Ø in mm		
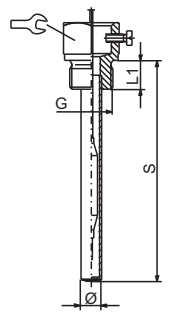	**Screw-in sheath "20"** (U) with screw-in spigot, form A as per DIN 3852/2 with locking screw. (Clamping piece to fasten the probe for extra code "f")	G 1/2 L_1=14 27	G 3/8 L_1=12 24	CuZn (brass)	CrNi (stainless steel)	100 120 150 200 300 400 Specifications in plain text	8 (Internal Ø 6.,5)	10 (Internal Ø 8.5)	15 (Internal Ø 13.5)
Order code:	606710-**20**	13	12	46	20	. . .	8	10	15
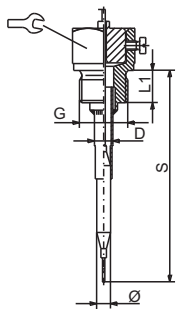	**Screw-in sheath, open "21"** (UO) without immersion tube base, with screw-in spigot, form A as per DIN 3852/2 with locking screw. (Clamping piece to fasten the probe for extra code "f")	G 1/2 L_1=14 27	G 3/8 L_1=12 24	CuZn (brass)	CrNi (stainless steel)	100 120 150 200 300 400 Specifications in plain text	8 (Internal Ø 6.,5)		
Order code:	606710-**21**	13	12	46	20	. . .	8		
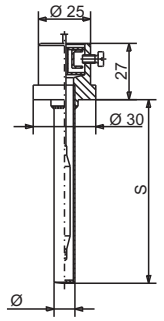	**Sheath with welded collar "22"** (US) straight, with locking screw. (Clamping piece to fasten the probe for extra code "f")	without thread		St (Steel)	CrNi (stainless steel)	100 120 150 200 300 400 Specifications in plain text		10 (Internal Ø 8.5)	15 (Internal Ø 13.5)
Order code:	606710-**22**	00		01	20	. . .		10	15
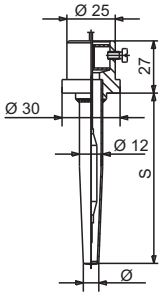	**Sheath with welded collar „23"** (US) conical from 12 to 8 mm, with locking screw. (Clamping piece to fasten the probe for extra code "f")	without thread		St (Steel)	CrNi (stainless steel)	100 120 150 200 300 400 Specifications in plain text	Immersion tube conical from 12 to 8 mm (Internal Ø 6.5)		
Order code:	606710-**23**	00		01	20	. . .	8		

	1		**2**		**3**		**4**		**5**
Order code:	606710-. .	-	. .	-	. .	-	. . .	-	. .
Order example:	606710-**20**	-	13	-	01	-	100	-	10

JUMO GmbH & Co. KG
Delivery address: Mackenrodtstraße 14
36039 Fulda, Germany
Postal address: 36035 Fulda, Germany
Phone: +49 661 6003-0
Fax: +49 661 6003-607
E-mail: mail@jumo.net
Internet: www.jumo.net

JUMO Instrument Co. Ltd.
JUMO House
Temple Bank, Riverway
Harlow, Essex CM20 2DY, UK
Phone: +44 1279 635533
Fax: +44 1279 635262
E-mail: sales@jumo.co.uk
Internet: www.jumo.co.uk

JUMO Process Control, Inc.
6733 Myers Road
East Syracuse, NY 13057, USA
Phone: 315-437-5866
1-800-554-5866
Fax: 315-437-5860
E-mail: info.us@jumo.net
Internet: www.jumousa.com

Sheaths

Order code:	1	2		3		4	5		
Process connection		Thread G		Material		Immersion tube length "S" in mm	Immersion tube Ø in mm		
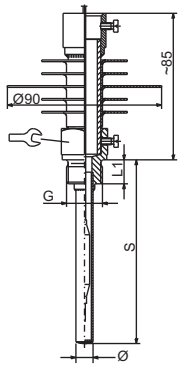	**Screw-in sheath with intermediate piece "30"** (UZ) and locking screw for thermostat with rigid shaft and probe temperature exceeding +150°C.	G 1/2 L_1=14 27	G 3/8 L_1=12 24		CrNi (stainless steel)	100 120 150 200 300 400 Specifications in plain text	8 (Internal Ø 6.,5)	10 (Internal Ø 8.5)	15 (Internal Ø 13.5)
Order code:	606710-**30**	13	12		20	. . .	8	10	15
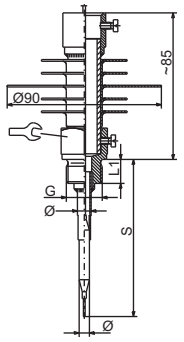	**Sheath with screw-in piece with intermediate piece, open "31"** (UZO) and locking screw for thermostat with rigid shaft and probe temperature exceeding +150°C.	G 1/2 L_1=14 27	G 3/8 L_1=12 24		CrNi (stainless steel)	100 120 150 200 300 400 Specifications in plain text	8 (Internal Ø 6.5)		
Order code:	606710-**31**	13	12		20	. . .	8		
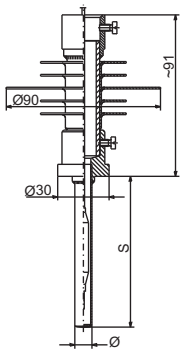	**Sheath with welded collar and intermediate piece, straight "32"** (UZS) and locking screw for thermostats with rigid shaft and probe temperature exceeding +150°C.	without thread		St (Steel)	CrNi (stainless steel)	100 120 150 200 300 400 Specifications in plain text		10 (Internal Ø 8.5)	15 (Internal Ø 13.5)
Order code:	606710-**32**	00		01	20	. . .		10	15

	1		2		3		4		5
Order code:	606710-. .	-	. .	-	. .	-	. . .	-	. .
Order example:	606710-**30**	-	13	-	20	-	200	-	8

JUMO GmbH & Co. KG
Delivery address: Mackenrodtstraße 14
36039 Fulda, Germany
Postal address: 36035 Fulda, Germany
Phone: +49 661 6003-0
Fax: +49 661 6003-607
E-mail: mail@jumo.net
Internet: www.jumo.net

JUMO Instrument Co. Ltd.
JUMO House
Temple Bank, Riverway
Harlow, Essex CM20 2DY, UK
Phone: +44 1279 635533
Fax: +44 1279 635262
E-mail: sales@jumo.co.uk
Internet: www.jumo.co.uk

JUMO Process Control, Inc.
6733 Myers Road
East Syracuse, NY 13057, USA
Phone: 315-437-5866
1-800-554-5866
Fax: 315-437-5860
E-mail: info.us@jumo.net
Internet: www.jumousa.com

Sheaths

Order code:	**1**	**2**		**3**			**4**	**5**		
Process connection		Thread G		Material			Immersion tube length "S" in mm	Immersion tube Ø in mm		
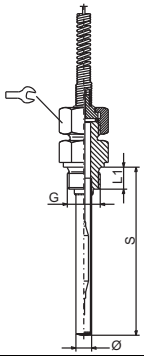	**Screw-in sleeve for union nut** (52) **"40"** (E) Screw-in spigot*, form A as per DIN 3852/2.	G 1/2 L_1=14 27	G 3/8 L_1=12 22	CuZn (brass)		CrNi (stainless steel)	100 120 150 200 300 400 Specifications in plain text	8 (Internal Ø 6.,5)	10 (Internal Ø 8.5)	
Order code:	606710-**40**	13	12	46		20	. . .	8	10	
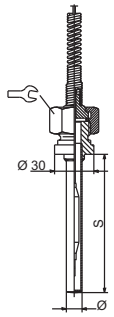	**Welding sleeve for union nut** (52) **straight "41"** (ES)	without thread 27			St (Steel)	CrNi (stainless steel)	100 120 150 200 300 400 Specifications in plain text		10 (Internal Ø 8.5)	
Order code:	606710-**41**	00			01	20	. . .		10	
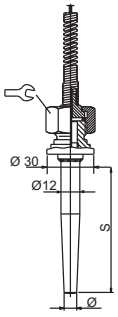	**Welding sleeve for union nut** (52) **conical "42"** (ES)	without thread 27			St (Steel)	CrNi (stainless steel)	100 120 150 200 300 400 Specifications in plain text	Immersion tube conical from 12 to 8 mm (Internal Ø 6.5)		
Order code:	606710-**42**	00			01	20	. . .	8		
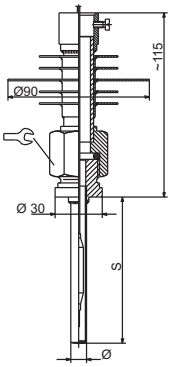	**Welding sleeve for union nut** (52) **with intermediate piece, straight "45"** (EZS)	without thread 32			St (Steel)	CrNi (stainless steel)	100 120 150 200 300 400 Specifications in plain text		10 (Internal Ø 8.5)	15 (Internal Ø 13.5)
Order code:	606710-**45**	00			01	20	. . .		10	15

	1		**2**		**3**		**4**		**5**
Order code:	606710-. .	-	. .	-	. .	-	. . .	-	. .
Order example:	606710-**42**	-	00	-	01	-	300	-	8

JUMO GmbH & Co. KG
Delivery address: Mackenrodtstraße 14
36039 Fulda, Germany
Postal address: 36035 Fulda, Germany
Phone: +49 661 6003-0
Fax: +49 661 6003-607
E-mail: mail@jumo.net
Internet: www.jumo.net

JUMO Instrument Co. Ltd.
JUMO House
Temple Bank, Riverway
Harlow, Essex CM20 2DY, UK
Phone: +44 1279 635533
Fax: +44 1279 635262
E-mail: sales@jumo.co.uk
Internet: www.jumo.co.uk

JUMO Process Control, Inc.
6733 Myers Road
East Syracuse, NY 13057, USA
Phone: 315-437-5866
1-800-554-5866
Fax: 315-437-5860
E-mail: info.us@jumo.net
Internet: www.jumousa.com

Sheaths

Order code:	**1**	**2**	**3**			**4**	**5**
Process connection		Thread G	Material			Immersion tube length "S" in mm	Immersion tube Ø in mm
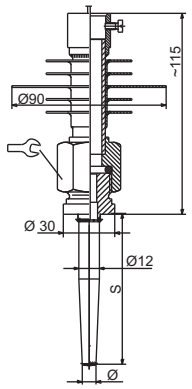	**Welding sleeve for union nut** (52) **with intermediate piece, conical "46“** (EZS)	without thread 32		St (Steel)	CrNi (stainless steel)	100 120 150 200 300 400 Specifications in plain text	Immersion tube conical from 12 to 8 mm (Internal Ø 6.5)
Order code:	606710-**46**			01	20	. . .	8

	1		**2**		**3**		**4**		**5**
Order code:	606710-. .	-	. .	-	. .	-	. . .	-	. .
Order example:	606710-	-							

Optional accessories

		Abbreviation for process connections	Part No.
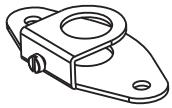	Sheet steel flange	**72**	60/60677200
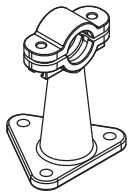	Wall support	**73**	60/60171300
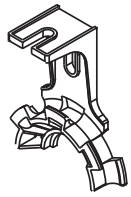	Holder	**78**	60/00558731 3 pieces
		79	60/00558730 6 pieces

JUMO GmbH & Co. KG
Delivery address: Mackenrodtstraße 14
36039 Fulda, Germany
Postal address: 36035 Fulda, Germany
Phone: +49 661 6003-0
Fax: +49 661 6003-607
E-mail: mail@jumo.net
Internet: www.jumo.net

JUMO Instrument Co. Ltd.
JUMO House
Temple Bank, Riverway
Harlow, Essex CM20 2DY, UK
Phone: +44 1279 635533
Fax: +44 1279 635262
E-mail: sales@jumo.co.uk
Internet: www.jumo.co.uk

JUMO Process Control, Inc.
6733 Myers Road
East Syracuse, NY 13057, USA
Phone: 315-437-5866
1-800-554-5866
Fax: 315-437-5860
E-mail: info.us@jumo.net
Internet: www.jumousa.com

Admissible load at the sheath

Sheaths **20** (U)**, 22** (US)**, 30** (UZ)**, 32** (UZS)**, 40** (E)**, 41** (ES)**, 45** (EZS) and **46** (EZS)

The following values describe the maximum capacity of the corresponding connection type.
The maximum pressure sealable depends on the fitting conditions and may be lower.

Sheath made of steel 22, 23, 32, 41, 42, 45 and 46 (Discontinued types: 20, 30, 32 and 40)

Material	Tube	Screw-in nipples	Welding nipples
	St 35.8 I	Steel 1.0038	Steel 1.5415

Capacity	Temperature	Pipe diameter		
		8 x 0.75 mm or conical	10 x 0.75 mm	15 x 0.75 mm
		Maximum admissible pressure		
	100°C	89 bar	72 bar	48 bar
	150°C	83 bar	67 bar	45 bar
	200°C	78 bar	63 bar	42 bar
	300°C	59 bar	47 bar	32 bar
	350°C	50 bar	40 bar	27 bar

max. admissible operating temperature	Tube	Nipple	max. admissible operating temperature*	
			static load	without load
	St 35.8 I	Screw-in nipples	+300°C	+530°C
		Welding nipples	+450°C	
	* observe the max. admissible probe temperature of the respective thermostat version. For operating temperatures > +420°C: observe the operating life of 200,000 h at a static load TRD508. Sheath "21" (UO) and "31" (UZO): Use only in pressureless medium.			

Sheath made of stainless steel

Material	Pipe and nipple: Stainless steel (1.4571)

Capacity	Temperature	Pipe diameter		
		8 x 0.75 mm or conical	10 x 0.75 mm	15 x 0.75 mm
		Maximum admissible pressure		
	100°C	92 bar	74 bar	50 bar
	150°C	88 bar	71 bar	48 bar
	200°C	83 bar	67 bar	45 bar
	300°C	72 bar	58 bar	39 bar
	400°C	67 bar	54 bar	36 bar

max. admissible operating temperature*	static load +400°C	without load +530°C
	* observe the max. admissible probe temperature of the respective thermostat version.	

Sheath made of brass (must not be used for requirements acc. to PED)

Material	Pipe and nipple: CuZn, nickel plated

Capacity	Temperature	Pipe diameter		
		8 x 0.75 mm	10 x 0.75 mm	15 x 0.75 mm
		Maximum admissible pressure		
	100°C	50 bar	40 bar	27 bar
	150°C	48 bar	39 bar	26 bar

max. admissible operating temperature*	+150°C
	* observe the max. admissible probe temperature of the respective thermostat version.

JUMO GmbH & Co. KG
Delivery address: Mackenrodtstraße 14
36039 Fulda, Germany
Postal address: 36035 Fulda, Germany
Phone: +49 661 6003-0
Fax: +49 661 6003-607
E-mail: mail@jumo.net
Internet: www.jumo.net

JUMO Instrument Co. Ltd.
JUMO House
Temple Bank, Riverway
Harlow, Essex CM20 2DY, UK
Phone: +44 1279 635533
Fax: +44 1279 635262
E-mail: sales@jumo.co.uk
Internet: www.jumo.co.uk

JUMO Process Control, Inc.
6733 Myers Road
East Syracuse, NY 13057, USA
Phone: 315-437-5866
1-800-554-5866
Fax: 315-437-5860
E-mail: info.us@jumo.net
Internet: www.jumousa.com

JUMO setpoint adjusters for thermostats, EM series

Individual components: spindle-fitting knobs, adjustable stops, setpoint dials, surrounds, screws

01

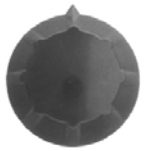

21

11

12

18

01
Spindle-fitting knobs for pushing onto 6 mm dia. shafts, with 4.6 mm flat

Part no.	**60 701 205**
Max. dia.	30.0 mm
Height	19.0 mm
Index radius	17.5 mm
Panel hole	14.0 mm
Operating temperature	+120 °C
Material	thermoplastic, slate grey RAL 7015

21
Setpoint dial (see Data Sheet 602021 for standard ranges)

Outer dia.	50.0 mm
Height	4.8 mm
Fixing	with two M3 screws
Spacing	22.0 mm
Marking	iron-grey RAL 7011
Operating temperature	+120 °C
Material	thermoplastic, flint grey RAL 7032
Dial divisions	over 250° angle

11
Stop for knobs 01 and 02

Part no.	**60 701 203**
Limiting	to limit the scale max. endpoint, right stop
Adjustment	125 to 250° angle

12
Stop for knob 01 only

Part no.	**60 701 202**
Limiting	to limit the scale min. starting point, left stop
Adjustment	0 to 125° angle

18
Fixing screws M3 x 8 DIN 84

Part no.	**60 037 100**
Material	nickel-plated brass

JUMO GmbH & Co. KG
Delivery address: Mackenrodtstraße 14
36039 Fulda, Germany
Postal address: 36035 Fulda, Germany
Phone: +49 661 6003-0
Fax: +49 661 6003-607
E-mail: mail@jumo.net
Internet: www.jumo.net

JUMO Instrument Co. Ltd.
JUMO House
Temple Bank, Riverway
Harlow, Essex CM20 2DY, UK
Phone: +44 1279 635533
Fax: +44 1279 635262
E-mail: sales@jumo.co.uk
Internet: www.jumo.co.uk

JUMO Process Control, Inc.
6733 Myers Road
East Syracuse, NY 13057, USA
Phone: 315-437-5866
1-800-554-5866
Fax: 315-437-5860
E-mail: info.us@jumo.net
Internet: www.jumousa.com

07

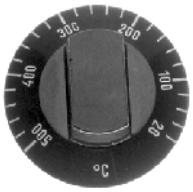

23

15

18

08

16

19

07
Spindle-fitting knobs for pushing onto 6 mm dia. shafts, with 4.6 mm flat (see Data Sheet 602021 for standard ranges)

Max. dia.	41.0 mm
Height	18.0 mm
Panel hole	16.0 mm
Operating temperature	+80 °C
Material	thermoplastic, slate grey RAL 7015
Marking	white

08
Knob
Part no. **64 336 008**
As above, but with pointer as index

23
Surround

Part no.	**63 202 000**
Max. dia.	47 mm
Max. height	7.3 mm
Fixing spacing	a) 22 mm b) 28 mm
Fixing for	a) 2 screws M3 x 8 b) 2 screws M4 x 8
Operating temperature	+80 °C
Material	thermoplastic, bright chrome electroplated

15
Stop

Part no.	**63 205 002**
Limiting	to limit the max. and min. of the scale starting point or end point
Adjustment	–125° or +125° angle
Fixing spacing	22 mm

16
Stop
Part no. **63 205 001**
As above, but with fixing spacing 28 mm

18
Fixing screws

Part no.	**60 037 105**
M3 x 8 DIN 84 for spacing	22 mm

19
Fixing screws

Part no.	**60 046 100**
M4 x 8 DIN 84 for spacing	28 mm
Material	brass tenned

Standard setpoint adjusters for panel-mounting thermostats EMf-1

Type W1	Type W8	Type W8 (heatTHERM)
consisting of knob 01 adjustable stop 11 setpoint dial 21 2 screws 18	consisting of knob 07 surround 23 adjustable stop 15 2 screws 18	consisting of knob 07 surround 23 adjustable stop 16 2 screws M4 x 8

JUMO GmbH & Co. KG
Delivery address: Mackenrodtstraße 14
36039 Fulda, Germany
Postal address: 36035 Fulda, Germany
Phone: +49 661 6003-0
Fax: +49 661 6003-607
E-mail: mail@jumo.net
Internet: www.jumo.net

JUMO Instrument Co. Ltd.
JUMO House
Temple Bank, Riverway
Harlow, Essex CM20 2DY, UK
Phone: +44 1279 635533
Fax: +44 1279 635262
E-mail: sales@jumo.co.uk
Internet: www.jumo.co.uk

JUMO Process Control, Inc.
6733 Myers Road
East Syracuse, NY 13057, USA
Phone: 315-437-5866
1-800-554-5866
Fax: 315-437-5860
E-mail: info.us@jumo.net
Internet: www.jumousa.com

Bimetal Dial Thermometer

Standard version

Special features

- Class 1.5
- Display ranges -50°C to +500°C
- Steel case zinc-plated
- Case sizes ∅: 63 mm, 80 mm and 100 mm
- Protection type IP 51

Type 608001/1810 **Type 608001/0110**

Brief description

The locally displaying standard thermometers work according to the principle of a bimetal coil. The measuring principle is based on the fact that the bimetal coil is exposed to the medium temperature in a stainless steel or brass protection tube. The coil rotates as the temperature increases or falls. The rotation acts directly on the indicator via an axis. The indicator deflection is therefore proportional to the change of temperature.

Technical data

Basic type extension	0163, 0180, 0110, 1863, 1880, 1810
Case	Case and bezel made of galvanized steel sheet; bracket made of aluminum (design type 18)
Protection type	IP 51 according to DIN EN 60529
Front pane	Glass
Scale	Polished aluminum, with black lettering
Display	Linear, class 1.5 similar to DIN EN 13190
Time constant $t_{0.632}$	Approx. 30 s, measured in flowing water with a probe Ø of 10 mm made of stainless steel
Influential effect of the ambient temperature	No influence
Limit value temperatures	-30 to +80°C (storage and transport -30 to +80°C)
Rated position	Any

JUMO GmbH & Co. KG
Delivery address: Mackenrodtstraße 14
36039 Fulda, Germany
Postal address: 36035 Fulda, Germany
Phone: +49 661 6003-0
Fax: +49 661 6003-607
E-mail: mail@jumo.net
Internet: www.jumo.net

JUMO Instrument Co. Ltd.
JUMO House
Temple Bank, Riverway
Harlow, Essex CM20 2DY, UK
Phone: +44 1279 635533
Fax: +44 1279 635262
E-mail: sales@jumo.co.uk
Internet: www.jumo.co.uk

JUMO Process Control, Inc.
6733 Myers Road
East Syracuse, NY 13057, USA
Phone: 315-437-5866
1-800-554-5866
Fax: 315-437-5860
E-mail: info.us@jumo.net
Internet: www.jumousa.com

Technical data

Display range (AB)	Display range in °C	Measuring range in °C	Tolerance in K (+/-)
632	-20 to +60	-10 to +60	1.5
810	0 to +80	+10 to +70	1.5
818	0 to +120	+20 to +100	3.0
826	0 to +160	+20 to +140	3.0
832	0 to +200	+20 to +180	3.0
834	0 to +250	+30 to +220	4.0
840	0 to +300	+30 to +270	8.0
854	0 to +500	+50 to +450	8.0

Dimensions

Types:
608001/0163
608001/0180
608001/0110

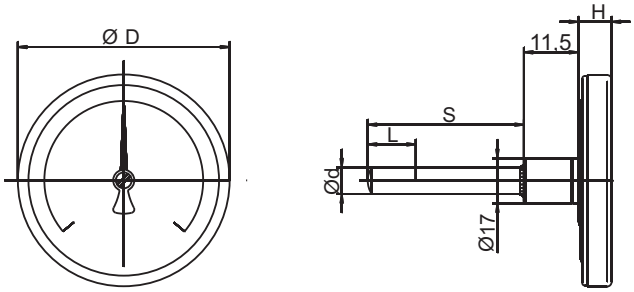

Types:
608001/1863
608001/1880
608001/1810

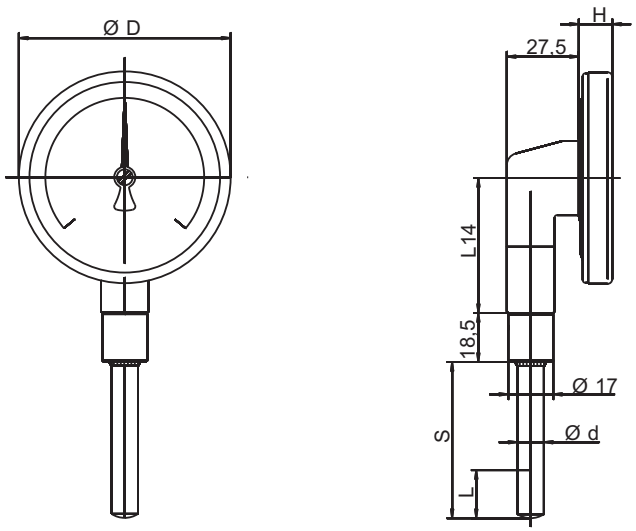

For dimensional specifications about Ø d, see data sheet 608730.

Extra codes **430**

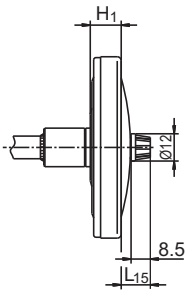

Type	Ø D	H	H_1	L_{14}	L_{15}
608001/0163	63	13	14	- -	12
608001/1863				26	
608001/0180	83	13	14	- -	13
608001/1880				51	
608001/0110	100	16	16	- -	13
608001/1810				51	

JUMO GmbH & Co. KG
Delivery address: Mackenrodtstraße 14
36039 Fulda, Germany
Postal address: 36035 Fulda, Germany
Phone: +49 661 6003-0
Fax: +49 661 6003-607
E-mail: mail@jumo.net
Internet: www.jumo.net

JUMO Instrument Co. Ltd.
JUMO House
Temple Bank, Riverway
Harlow, Essex CM20 2DY, UK
Phone: +44 1279 635533
Fax: +44 1279 635262
E-mail: sales@jumo.co.uk
Internet: www.jumo.co.uk

JUMO Process Control, Inc.
6733 Myers Road
East Syracuse, NY 13057, USA
Phone: 315-437-5866
1-800-554-5866
Fax: 315-437-5860
E-mail: info.us@jumo.net
Internet: www.jumousa.com

Order details

Order code	(1)	Basic type	
		Mechanical dial thermometer, standard version class 1.5	
		Design type 01	Case size Ø
608001/0163		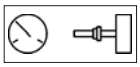	63 mm
608001/0180			80 mm
608001/0110			100 mm
		Design type 18	Case size Ø
608001/1863		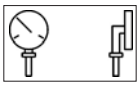	63 mm
608001/1880			80 mm
608001/1810			100 mm

	(2)	Display range (AB) in °C
632		-20 to +60
810		0 to +80
818		0 to +120
826		0 to +160
832		0 to +200
834		0 to +250
840		0 to +300
854		0 to +500

	(3)	Process connection (PC)		
010	TA 01	Protection tube with collar		
844	TA 02	Protection tube with union nut and loose screw connection [a]		
845	TA 03	Protection tube with loose union nut		
841	TA 04	Protection tube with fixed hexagon [a]		
847	TA 06	Protection tube with displaceable threaded fitting (max. 20 bar)		
018	TA 08	Protection tube with displaceable mounting plate made of zinc-plated steel and fixing screw		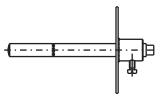
858	SH 04	Single-section screw-in protec-tion tube		
891	SH 05	Multi-sectional screw-in protec-tion tube		
913	SH 07	Multi-sectional screw-in protection tube with fixing screw		
820	SH 09	Multi-sectional weld-in protection tube with fixing screw		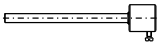

[a] Screw-in spigot according to DIN 3852 form A (not for NPT threads).

JUMO GmbH & Co. KG
Delivery address: Mackenrodtstraße 14
36039 Fulda, Germany
Postal address: 36035 Fulda, Germany
Phone: +49 661 6003-0
Fax: +49 661 6003-607
E-mail: mail@jumo.net
Internet: www.jumo.net

JUMO Instrument Co. Ltd.
JUMO House
Temple Bank, Riverway
Harlow, Essex CM20 2DY, UK
Phone: +44 1279 635533
Fax: +44 1279 635262
E-mail: sales@jumo.co.uk
Internet: www.jumo.co.uk

JUMO Process Control, Inc.
6733 Myers Road
East Syracuse, NY 13057, USA
Phone: 315-437-5866
1-800-554-5866
Fax: 315-437-5860
E-mail: info.us@jumo.net
Internet: www.jumousa.com

(4) Ø Process connection (PC) [b]

6	6 mm	
10	10 mm	
12	12 mm	(only with SH 05, SH 07)
14	14 mm	(only with SH 05, SH 07, SH 09)
17	17 mm	(only with SH 04)

(5) Thread type of process connection (PC) [b]

000	Without thread (only TA 01)
103	Screw connection G 3/8
104	Screw connection G 1/2
105	Screw connection G 3/4
144	Screw connection 1/2-14NPT

(6) Probe material

26	Stainless steel (CrNi, 1.4571)
46	Brass (CuZn)

(7) Material of process connection (PC) [b]

26	Stainless steel (CrNi, 1.4571)
46	Brass (CuZn)

(8) Insertion length, process connection (PC) dimension "S"

100	100 mm
150	150 mm
200	200 mm
. . .	Special length (specifications in plain text – 50 mm increments)

(9) Extra code (TZ)

000	Without extra code
430	Drag indicator (only with basic type extension 0163, 0180, 0110, 1863, 1880, 1810 – display range min. 100 K)
522	Customized scale

Special versions upon request!

[b] For the description and special features, refer to data sheet 608730.

	(1)		(2)		(3)		(4)		(5)		(6)		(7)		(8)		(9)		
Order code	608001/	-		-		-		-		-		-		-		/		,	. . .
Order example	608001/0163	-	818	-	845	-	10	-	104	-	96	-	46	-	100	/	000 [c]	,	. . .

[c] List extra codes in sequence, separated by commas.

Stock versions

Part no.	Type	Display range °C	ø / dimension "S" or "EL"
80000580	608001/0163-818-913-12-104-46-46-50/000	0 to +120	12 x 50
80000581	608001/0163-818-913-12-104-46-46-63/000	0 to +120	12 x 63
80000582	608001/0180-818-913-12-104-46-46-50/000	0 to +120	12 x 50
80000583	608001/0110-818-913-12-104-46-46-100/000	0 to +120	12 x 100
80000101	608001/0110-834-841-10-104-01-01-200/000	0 to +250	10 x 200
80000103	608001/1810-818-841-10-104-46-01-100/000	0 to +120	10 x 100

Delivery within 3 working days after receipt of order

JUMO GmbH & Co. KG
Delivery address: Mackenrodtstraße 14
36039 Fulda, Germany
Postal address: 36035 Fulda, Germany
Phone: +49 661 6003-0
Fax: +49 661 6003-607
E-mail: mail@jumo.net
Internet: www.jumo.net

JUMO Instrument Co. Ltd.
JUMO House
Temple Bank, Riverway
Harlow, Essex CM20 2DY, UK
Phone: +44 1279 635533
Fax: +44 1279 635262
E-mail: sales@jumo.co.uk
Internet: www.jumo.co.uk

JUMO Process Control, Inc.
6733 Myers Road
East Syracuse, NY 13057, USA
Phone: 315-437-5866
1-800-554-5866
Fax: 315-437-5860
E-mail: info.us@jumo.net
Internet: www.jumousa.com

Bimetal Dial Thermometer

Industry version

Special features

- Class 1
- Display ranges from -50°C to +500°C
- Stainless steel case
- Case sizes ∅: 60 mm, 80 mm and 100 mm
- Protection type IP54, also available IP65

Type 608002/1810 **Type 608002/0110**

Brief description

The locally displaying industrial thermometers work according to the principle of a bimetal coil. The measuring principle is based on the fact that the bimetal coil is exposed to the medium temperature in a stainless steel or brass protection tube. The coil rotates as the temperature increases or falls. The rotation acts directly on the indicator via an axis. The pointer indicator is therefore proportional to the change of temperature.

All versions of the JUMO bimetal dial thermometer 608002 comply with DIN EN 13190, class 1.

Technical data

Basic type extension	0160, 0180, 0110, 1860, 1880, 1810
Case	Case and bezel made of stainless steel; bracket made of aluminum (design 18)
Protection type	IP 54 according to DIN EN 60529 (IP 65 in the case of extra code 404)
Front pane	Glass with extra code 404 made of acrylic glass (PMMA)
Scale	Polished aluminum, with black lettering
Display	Linear, class 1 similar to DIN EN 13190
Time constant $_{t0.632}$	Approx. 20 s, measured in flowing water with a probe Ø of 10 mm made of stainless steel
Influential effect of the ambient temperature	No influence
Limit value temperatures	-30 to +80°C (storage and transport -30 to +80°C)
Rated position	Any

JUMO GmbH & Co. KG
Delivery address: Mackenrodtstraße 14
36039 Fulda, Germany
Postal address: 36035 Fulda, Germany
Phone: +49 661 6003-0
Fax: +49 661 6003-607
E-mail: mail@jumo.net
Internet: www.jumo.net

JUMO Instrument Co. Ltd.
JUMO House
Temple Bank, Riverway
Harlow, Essex CM20 2DY, UK
Phone: +44 1279 635533
Fax: +44 1279 635262
E-mail: sales@jumo.co.uk
Internet: www.jumo.co.uk

JUMO Process Control, Inc.
6733 Myers Road
East Syracuse, NY 13057, USA
Phone: 315-437-5866
1-800-554-5866
Fax: 315-437-5860
E-mail: info.us@jumo.net
Internet: www.jumousa.com

Technical data (cont.)

Display range (AB)	Display range in °C	Measuring range in °C	Tolerance in K (+/-)
632	-20 to +60	-10 to +60	1.0
643	-20 to +120	0 to +100	2.0
469	-40 to +40	-30 to +30	1.0
357	-50 to +50	-40 to +40	1.0
810	0 to +80	+10 to +70	1.0
814	0 to +100	+10 to +90	1.0
818	0 to +120	+20 to +100	1.0
832	0 to +200	+20 to +180	2.0
834	0 to +250	+30 to +220	2.5
840	0 to +300	+30 to +270	5.0
848	0 to +400	+50 to +350	5.0
854	0 to +500	+50 to +450	5.0

Dimensions

Types:
608002/0160
608002/0180
608002/0110

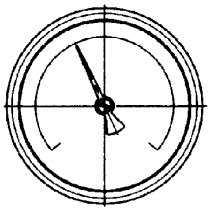

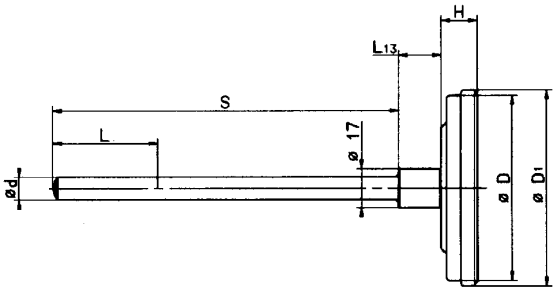

Type	Ø D	Ø D_1	H
608002/0160	60	65	17.5
608002/0180	80	85	18.5
608002/0110	100	106	18.5

Types:
608002/1860
608002/1880
608002/1810

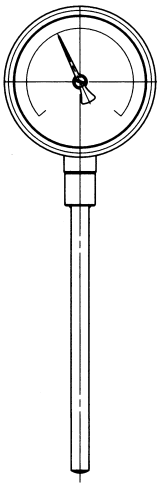

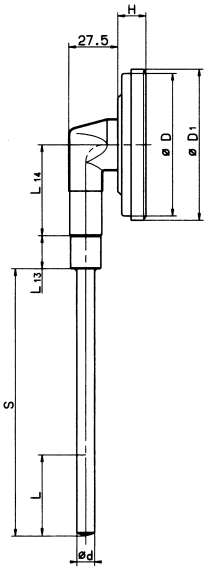

For dimensional specifications about Ø d and L_{13} see data sheet 608730.

Type	Ø D	Ø D_1	H	L_{14}
608002/1860	60	65	17.5	26
608002/1880	80	85	18.5	51
608002/1810	100	106	18.5	51

Extra codes **434**

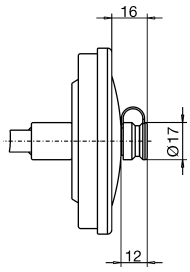

JUMO GmbH & Co. KG
Delivery address: Mackenrodtstraße 14
36039 Fulda, Germany
Postal address: 36035 Fulda, Germany
Phone: +49 661 6003-0
Fax: +49 661 6003-607
E-mail: mail@jumo.net
Internet: www.jumo.net

JUMO Instrument Co. Ltd.
JUMO House
Temple Bank, Riverway
Harlow, Essex CM20 2DY, UK
Phone: +44 1279 635533
Fax: +44 1279 635262
E-mail: sales@jumo.co.uk
Internet: www.jumo.co.uk

JUMO Process Control, Inc.
6733 Myers Road
East Syracuse, NY 13057, USA
Phone: 315-437-5866
1-800-554-5866
Fax: 315-437-5860
E-mail: info.us@jumo.net
Internet: www.jumousa.com

Order details

Order code	(1)	Basic type	
		Mechanical dial thermometer, industrial version, class 1	
		Design type 01	Case size Ø
608002/0160		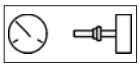	60 mm
608002/0180			80 mm
608002/0110			100 mm
		Design type 18	Case size Ø
608002/1860		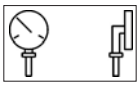	60 mm
608002/1880			80 mm
608002/1810			100 mm

	(2)	Display range (AB) in °C
632		-20 to +60
643		-20 to +120
469		-40 to +40
357		-50 to +50
810		0 to +80
814		0 to +100
818		0 to +120
832		0 to +200
834		0 to +250
840		0 to +300
848		0 to +400
854		0 to +500

	(3)	Process connection (PC) [b]		
010	TA 01	Protection tube with collar		
844	TA 02	Protection tube with union nut and loose screw connection [a]		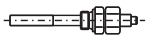
845	TA 03	Protection tube with loose union nut		
841	TA 04	Protection tube with fixed hexagon [a]		
847	TA 06	Protection tube with displaceable threaded fitting (max. 20 bar)		
018	TA 08	Protection tube with displaceable mounting plate made of zinc-plated steel and fixing screw		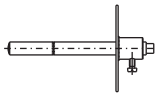
858	SH 04	Single-section screw-in protec-tion tube		
891	SH 05	Multi-sectional screw-in protec-tion tube		
913	SH 07	Multi-sectional screw-in protection tube with fixing screw		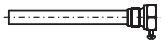
820	SH 09	Multi-sectional weld-in protection tube with fixing screw		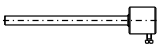

[a] Screw-in spigot according to DIN 3852 form A (not for NPT threads)
[b] For description and particularities refer to data sheet 608730.

JUMO GmbH & Co. KG
Delivery address: Mackenrodtstraße 14
36039 Fulda, Germany
Postal address: 36035 Fulda, Germany
Phone: +49 661 6003-0
Fax: +49 661 6003-607
E-mail: mail@jumo.net
Internet: www.jumo.net

JUMO Instrument Co. Ltd.
JUMO House
Temple Bank, Riverway
Harlow, Essex CM20 2DY, UK
Phone: +44 1279 635533
Fax: +44 1279 635262
E-mail: sales@jumo.co.uk
Internet: www.jumo.co.uk

JUMO Process Control, Inc.
6733 Myers Road
East Syracuse, NY 13057, USA
Phone: 315-437-5866
1-800-554-5866
Fax: 315-437-5860
E-mail: info.us@jumo.net
Internet: www.jumousa.com

	(4)	**Ø Process connection (PA)** [b]	
6		6 mm	(not with display ranges 628, 564, 807)
10		10 mm	
12		12 mm	(only with SH 05, SH 07)
14		14 mm	(only with SH 05, SH 07, SH 09)
17		17 mm	(only with SH 04)

	(5)	**Thread type of process connection (PC)** [b]
000		Without thread (only TA 01)
103		Screw connection G 3/8
104		Screw connection G 1/2
105		Screw connection G 3/4
144		Screw connection 1/2-14NPT

	(6)	**Probe material**
26		Stainless steel (CrNi, 1.4571)

	(7)	**Material of process connection (PC)** [b]
26		Stainless steel (CrNi, 1.4571)

	(8)	**Insertion length, process connection (PC) dimension "S"**
100		100 mm
150		150 mm
200		200 mm
. . .		Special length (specifications in plain text – 50 mm increments)

	(9)	**Extra code (TZ)**
000		Without extra code
404		IP 65 (only with basic type extension 0160, 0110, 1860, 1810) not with TZ 430
430		Drag indicator (only with basic type extension 0160, 0180, 0110, 1860, 1880, 1810 – display range min. 100 K)
434		Drag indicator can be adjusted with a screwdriver, protected by a cover
522		Customized scale

Special versions upon request!

[a] Screw-in spigot according to DIN 3852 form A (not for NPT threads)
[b] For description and particularities refer to data sheet 608730.

	(1)		(2)		(3)		(4)		(5)		(6)		(7)		(8)		(9)		
Order code	608002/	-		-		-		-		-		-		-		/		,	. . .
Order example	608002/0180	-	818	-	845	-	10	-	104	-	26	-	26	-	100	/	000 [c]	,	. . .

[c] List extra codes in sequence, separated by commas.

Stock versions

Part no.	Type	Display range °C	ø / dimension "S" or "EL"
80001185	608002/0180-818-847-6-104-26-26-200/000	0 to +120	6 x 200
80001186	608002/0180-834-847-6-104-26-26-200/000	0 to +250	6 x 200

Delivery within 3 working days after receipt of order

JUMO GmbH & Co. KG
Delivery address: Mackenrodtstraße 14
36039 Fulda, Germany
Postal address: 36035 Fulda, Germany
Phone: +49 661 6003-0
Fax: +49 661 6003-607
E-mail: mail@jumo.net
Internet: www.jumo.net

JUMO Instrument Co. Ltd.
JUMO House
Temple Bank, Riverway
Harlow, Essex CM20 2DY, UK
Phone: +44 1279 635533
Fax: +44 1279 635262
E-mail: sales@jumo.co.uk
Internet: www.jumo.co.uk

JUMO Process Control, Inc.
6733 Myers Road
East Syracuse, NY 13057, USA
Phone: 315-437-5866
1-800-554-5866
Fax: 315-437-5860
E-mail: info.us@jumo.net
Internet: www.jumousa.com

Bimetal Dial Thermometer
Chemistry version

Special features

- Class 1
- Display ranges -50°C to +500°C
- Stainless steel case with bayonet connection
- Case sizes ∅: 100 mm and 160 mm
- Protection type IP65

608003/1010

Brief description

The locally displaying bimetal thermometers (chemistry version) work according to the principle of a bimetal coil. The measuring principle is based on the fact that the bimetal coil is exposed to the medium temperature in a stainless steel protection tube. The coil rotates as the temperature increases or falls. The rotation acts directly on the indicator via an axis. The indicator deflection is therefore proportional to the change of temperature.

All versions of the JUMO bimetal dial thermometer 608003 comply with DIN EN 13190, class 1. JUMO precision bimetal dial thermometers are the proven solution for local temperature measurements of both liquids and gases. They are suitable for insertion in pipelines, containers, machines and plants and do not require any external power source. Thanks to the high protection rating (IP65) and the lack of sensitivity to fluctuations in the ambient temperature due to the measuring principle, we also recommend these versions for outdoor use.

Technical data

Basic type extension	0110, 0116, 1010, 1016
Case	Stainless steel case with bayonet connection (1.4301)
Protection type	IP65 according to DIN EN 60529 (IP54 with extra code 434)
Front pane	Glass with extra code 434 made of acrylic glass (PMMA)
Scale	Polished aluminum, with black lettering
Display	Linear, class 1 according to DIN EN 13190
Time constant $t_{0.632}$	Approx. 20 s, measured in flowing water with a probe Ø of 10 mm made of stainless steel
Influential effect of the ambient temperature	No influence
Limit value temperatures	-30 to +80°C (storage and transport)
Rated position	Any

JUMO GmbH & Co. KG
Delivery address: Mackenrodtstraße 14
36039 Fulda, Germany
Postal address: 36035 Fulda, Germany
Phone: +49 661 6003-0
Fax: +49 661 6003-607
E-mail: mail@jumo.net
Internet: www.jumo.net

JUMO Instrument Co. Ltd.
JUMO House
Temple Bank, Riverway
Harlow, Essex CM20 2DY, UK
Phone: +44 1279 635533
Fax: +44 1279 635262
E-mail: sales@jumo.co.uk
Internet: www.jumo.co.uk

JUMO Process Control, Inc.
6733 Myers Road
East Syracuse, NY 13057, USA
Phone: 315-437-5866
1-800-554-5866
Fax: 315-437-5860
E-mail: info.us@jumo.net
Internet: www.jumousa.com

Display range (AB)	Display range in °C	Measuring range in °C	Tolerance in K (+/-)
643	-20 to +120	0 to +100	2.0
357	-50 to +50	-40 to +40	1.0
810	0 to +80	+10 to +70	1.0
814	0 to +100	+10 to +90	1.0
818	0 to +120	+20 to +100	1.0
826	0 to +160	+20 to +140	2.0
832	0 to +200	+20 to +180	2.0
834	0 to +250	+30 to +220	2.5
840	0 to +300	+30 to +270	5.0
854	0 to +500	+50 to +450	5.0

Dimensions

Types:
608003/0110
608003/0116

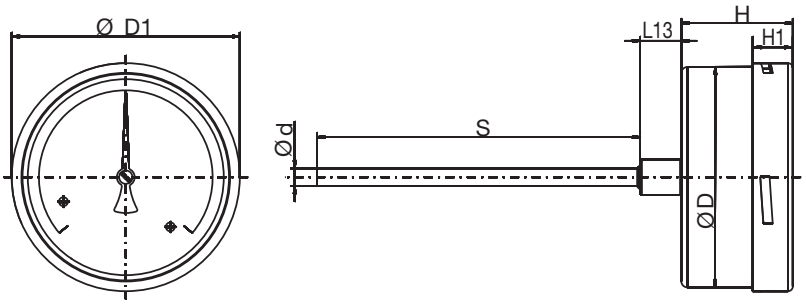

Types:
608003/1010
608003/1016

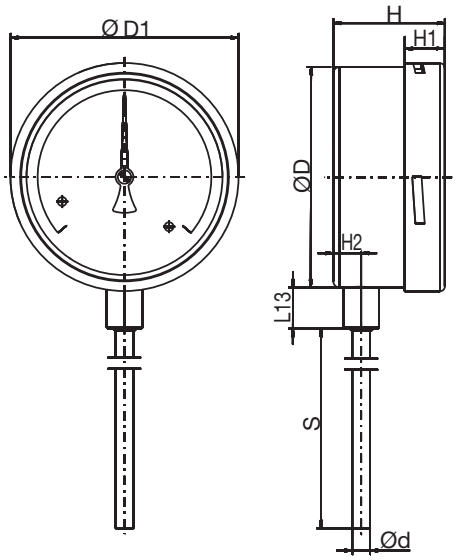

For dimensional specifications about Ø d and L_{13} see data sheet 608730.

Extra code **434**

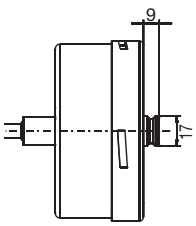

Type	Ø D	Ø D_1	H	H_1	H_2
608003/0110	99	101.5	50	18	12.5
608003/1010					
608003/0116	159	161.5		21	
608003/1016					

JUMO GmbH & Co. KG
Delivery address: Mackenrodtstraße 14
36039 Fulda, Germany
Postal address: 36035 Fulda, Germany
Phone: +49 661 6003-0
Fax: +49 661 6003-607
E-mail: mail@jumo.net
Internet: www.jumo.net

JUMO Instrument Co. Ltd.
JUMO House
Temple Bank, Riverway
Harlow, Essex CM20 2DY, UK
Phone: +44 1279 635533
Fax: +44 1279 635262
E-mail: sales@jumo.co.uk
Internet: www.jumo.co.uk

JUMO Process Control, Inc.
6733 Myers Road
East Syracuse, NY 13057, USA
Phone: 315-437-5866
1-800-554-5866
Fax: 315-437-5860
E-mail: info.us@jumo.net
Internet: www.jumousa.com

Order details

Order code	(1)	Basic type	
		Mechanical dial thermometer, chemistry version, class 1	
		Design type 01	Case size Ø
608003/0110		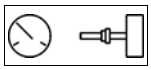	100 mm
608003/0116			160 mm
		Design type 10	Case size Ø
608003/1010		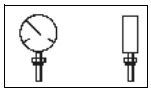	100 mm
608003/1016			160 mm

	(2)	Display range (AB) in °C
357		-50 to +50
643		-20 to +120
810		0 to +80
814		0 to +100
818		0 to +120
826		0 to +160
832		0 to +200
834		0 to +250
840		0 to +300
854		0 to +500

	(3)	Process connection (PC) [b]		
010	TA 01	Protection tube with collar		
844	TA 02	Protection tube with union nut and loose screw connection [a]		
845	TA 03	Protection tube with loose union nut		
841	TA 04	Protection tube with fixed hexagon [a]		
847	TA 06	Protection tube with displaceable threaded fitting (max. 20 bar)		
018	TA 08	Protection tube with displaceable mounting plate made of zinc-plated steel and fixing screw		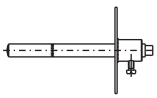
858	SH 04	Single-section screw-in protec-tion tube		
891	SH 05	Multi-sectional screw-in protec-tion tube		
913	SH 07	Multi-sectional screw-in protection tube with fixing screw		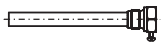
820	SH 09	Multi-sectional weld-in protection tube with fixing screw		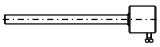

[a] Screw-in spigot according to DIN 3852 form A (not for NPT threads)
[b] For description and special features refer to data sheet 608730.

JUMO GmbH & Co. KG
Delivery address: Mackenrodtstraße 14
36039 Fulda, Germany
Postal address: 36035 Fulda, Germany
Phone: +49 661 6003-0
Fax: +49 661 6003-607
E-mail: mail@jumo.net
Internet: www.jumo.net

JUMO Instrument Co. Ltd.
JUMO House
Temple Bank, Riverway
Harlow, Essex CM20 2DY, UK
Phone: +44 1279 635533
Fax: +44 1279 635262
E-mail: sales@jumo.co.uk
Internet: www.jumo.co.uk

JUMO Process Control, Inc.
6733 Myers Road
East Syracuse, NY 13057, USA
Phone: 315-437-5866
1-800-554-5866
Fax: 315-437-5860
E-mail: info.us@jumo.net
Internet: www.jumousa.com

	(4)	**Ø Process connection (PC)** [b]	
6		6 mm	(not with display ranges 628, 564, 807)
10		10 mm	
12		12 mm	(only with SH 05, SH 07)
14		14 mm	(only with SH 05, SH 07, SH 09)
17		17 mm	(only with SH 04)

	(5)	**Thread type of process connection (PC)** [b]
000		Without thread (only TA 01)
103		Screw connection G 3/8
104		Screw connection G 1/2
105		Screw connection G 3/4
144		Screw connection 1/2-14NPT

	(6)	**Material of process connection (PC)** [b]
26		Stainless steel (CrNi, 1.4571)

	(7)	**Insertion length, process connection (PC) dimension "S"**
100		100 mm
150		150 mm
200		200 mm
. . .		Special length (specifications in plain text – 50 mm increments)

	(8)	**Extra code (TZ)**
000		Without extra code
362		Ex protection according to directive 2014/34/EU
434		Drag indicator can be adjusted with a screwdriver, protected by a cover, IP54 (front pane made of Plexiglas; max. ambient temperature +70°C)
474		Silicon-filled dial cushioning unit (only with basic type extension 0110, 0116, not in connection with TZ 434)
522		Customized scale

Special versions upon request!

[b] For the description and special features, refer to data sheet 608730.

	(1)		**(2)**		**(3)**		**(4)**		**(5)**		**(6)**		**(7)**		**(8)**		
Order code	608003/	-		-		-		-		-		-		/		,	. . .
Order example	608003/0110	-	810	-	010	-	10	-	104	-	26	-	100	/	000 [c]	,	. . .

[c] List extra codes in sequence, separated by commas.

JUMO GmbH & Co. KG
Delivery address: Mackenrodtstraße 14
36039 Fulda, Germany
Postal address: 36035 Fulda, Germany
Phone: +49 661 6003-0
Fax: +49 661 6003-607
E-mail: mail@jumo.net
Internet: www.jumo.net

JUMO Instrument Co. Ltd.
JUMO House
Temple Bank, Riverway
Harlow, Essex CM20 2DY, UK
Phone: +44 1279 635533
Fax: +44 1279 635262
E-mail: sales@jumo.co.uk
Internet: www.jumo.co.uk

JUMO Process Control, Inc.
6733 Myers Road
East Syracuse, NY 13057, USA
Phone: 315-437-5866
1-800-554-5866
Fax: 315-437-5860
E-mail: info.us@jumo.net
Internet: www.jumousa.com

Bimetal Dial Thermometer
Transformer version

Special features

- Class 1.5
- Display ranges -20°C to +120°C
- Stainless steel case
- Case size: ∅ 80 mm
- Protection type IP 55

Type 608005/1080

Brief description

Dial thermometers in transformer version
are devices which can be universally used for local temperature measurement.

Technical data

Basic type extension	1080
Case	Case and bezel made of stainless steel (1.4301)
Protection type	IP 55 according to DIN EN 60529
Front pane	Acrylic glass (PMMA)
Scale	White, with black lettering
Display	Class 1.5 similar to DIN EN 13190
Time constant $t_{0.632}$	Approx. 20 s, measured in flowing water with a probe Ø of 10 mm made of stainless steel
Influential effect of the ambient temperature	No influence
Limit value temperatures	-30 to +80°C (storage and transport -30 to +80°C)
Rated position	Any

JUMO GmbH & Co. KG
Delivery address: Mackenrodtstraße 14
36039 Fulda, Germany
Postal address: 36035 Fulda, Germany
Phone: +49 661 6003-0
Fax: +49 661 6003-607
E-mail: mail@jumo.net
Internet: www.jumo.net

JUMO Instrument Co. Ltd.
JUMO House
Temple Bank, Riverway
Harlow, Essex CM20 2DY, UK
Phone: +44 1279 635533
Fax: +44 1279 635262
E-mail: sales@jumo.co.uk
Internet: www.jumo.co.uk

JUMO Process Control, Inc.
6733 Myers Road
East Syracuse, NY 13057, USA
Phone: 315-437-5866
1-800-554-5866
Fax: 315-437-5860
E-mail: info.us@jumo.net
Internet: www.jumousa.com

Display range (AB)	Display range in °C	Measuring range in °C	Tolerance in K (+/-)
643	-20 to +120	0 to +100	3.0
818	0 to +120	+20 to +120	3.0

Dimensions

Type:
608005/1080

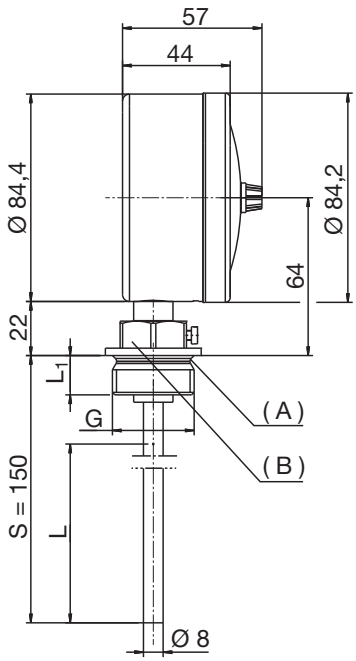

Extra code 434

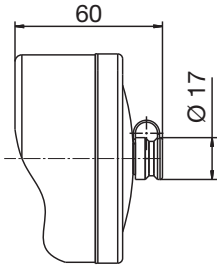

G	L1	L (active probe dimension)
G1/2A	14	75
G3/4A	16	
G1A	16	

(A) = Screw-in spigot, DIN 3852, form A
(B) = SW

Devices in stock

Part no.	Type	Display range	Temperature probe, process connection, material	Protection tube Dimension "S"
00483589	608005/1080-643-874-8-106-97-150/430, 522 with drag indicator	-20 to +120 °C	TF 05, d = 8 mm TA 24, "G 1" CuZn	Stainless steel 150 mm

Attention: only for devices in stock **– Packaging unit 3 pieces –** Quantity ordered must be divisible by 3!

JUMO GmbH & Co. KG
Delivery address: Mackenrodtstraße 14
36039 Fulda, Germany
Postal address: 36035 Fulda, Germany
Phone: +49 661 6003-0
Fax: +49 661 6003-607
E-mail: mail@jumo.net
Internet: www.jumo.net

JUMO Instrument Co. Ltd.
JUMO House
Temple Bank, Riverway
Harlow, Essex CM20 2DY, UK
Phone: +44 1279 635533
Fax: +44 1279 635262
E-mail: sales@jumo.co.uk
Internet: www.jumo.co.uk

JUMO Process Control, Inc.
6733 Myers Road
East Syracuse, NY 13057, USA
Phone: 315-437-5866
1-800-554-5866
Fax: 315-437-5860
E-mail: info.us@jumo.net
Internet: www.jumousa.com

Order details

Order code		
	(1)	**Basic type**
		Mechanical dial thermometer, transformer version class 1.5 with drag indicator
		Design type 10 Case size Ø
608005/1080		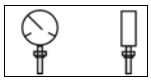 80 mm
	(2)	**Display range (AB) in °C**
643		-20 to +120
818		0 to +120
	(3)	**Process connection (PC)**
874		TA 24 Protection tube with screw connection, O ring seal and clamping screw
	(4)	**Ø Process connection (PC)**
8		8 mm
	(5)	**Thread type of process connection (PC)**
104		Screw connection G 1/2
105		Screw connection G 3/4
106		Screw connection G 1
	(6)	**Probe material**
97		Stainless steel (1.4571) – TF / Brass – TA
	(7)	**Insertion length, process connection (PC) dimension "S"**
150		150 mm
. . .		Special length (specifications in plain text – 50 mm increments)
	(8)	**Extra code (TZ)**
000		Without extra code
434		Drag indicator can be adjusted with a screwdriver, protected by a cover
522		Customized scale

Special versions upon request!

	(1)		(2)		(3)		(4)		(5)		(6)		(7)		(8)		
Order code	608005/	-	. . .	-	. . .	-	.	-	. . .	-	. .	-	. . .	/	. . .	,	. . .
Order example	608005/1080	-	818	-	874	-	8	-	106	-	97	-	150	/	000 [a]	,	. . .

[a] List extra codes in sequence, separated by commas.

Caution: only for devices in stock **– Packaging unit 3 pieces –** Quantity ordered must be divisible by 3!

Note: Contact thermometer temperature probe, refer to data sheet 608540.
For temperature indicator and contact dial thermometer with capillary, refer to data sheet 608201 and 608520.

JUMO GmbH & Co. KG
Delivery address: Mackenrodtstraße 14
36039 Fulda, Germany
Postal address: 36035 Fulda, Germany
Phone: +49 661 6003-0
Fax: +49 661 6003-607
Email: mail@jumo.net
Internet: www.jumo.net

JUMO Instrument Co. Ltd.
JUMO House
Temple Bank, Riverway
Harlow, Essex CM 20 2DY, UK
Phone: +44 1279 63 55 33
Fax: +44 1279 62 50 29
Email: sales@jumo.co.uk
Internet: www.jumo.co.uk

JUMO Process Control, Inc.
6733 Myers Road
East Syracuse, NY 13057, USA
Phone: +1 315 437 5866
Fax: +1 315 437 5860
Email: info.us@jumo.net
Internet: www.jumousa.com

Dial Thermometer

Type 608201

Special features

- Class 1.5
- Display ranges from -40° C to +600° C
- Temperature indicator as built-in or add-on device in the stainless steel case
- Case size Ø: 60 mm, 80 mm and 100 mm
  Front panel: 72x72 mm and 96x96 mm
- Protection type IP 55, also available IP 65

608201/2060

Brief description

Dial thermometers are temperature indicators for universal use. The units come in a stainless steel case with a liquid- or gas-filled measuring system.

The temperature-dependent volume change in a measuring system filled with liquid or the temperature-dependent pressure change in a measuring system filled with gas is converted to a rotational movement of the actual value indicator by a bourdon tube; no transmission gear is required.

608201/2572

Technical data

Case and/or front panel	Stainless steel (1.4301), design type 2496 and 2572, steel zinc-plated
Protection type	IP 55 according to DIN EN 60529 (IP 65 with extra code 404) Basic type extension, at front and rear: 1060, 1080, 1010, 2260, 2280, 2010, 2360, 2380, 2310 Basic type extension, at front only: 2060, 2080, 2010, 2160, 2180, 2110, 2496, 2572
Front pane	Glass in design types 2496 and 2572, and with extra codes 473 and 404 made of acrylic glass (PMMA)
Scale	White, with black lettering (silver, with black lettering in the case of extra code 473 and 404)
Display	Class 1.5 similar to EN 13190
Display correction	On the rear of the case, no display correction with extra code 473 and 404
Limit value temperatures	Transport and storage -30°C to +70°C (for display range -40 to +40°C up to max. 50°C; -30 to +50°C up to max. 60°C)
Rated position	Any

	Liquid filling	**Gas filling**
Measuring system	Display range (AB) ≤ 350°C	Display range (AB) ≥ 400°C
Time constant $t_{0.632}$	Approx. 12 s, measured in flowing water, with a probe Ø of 6 mm made of copper.	Approx. 4 s, measured in flowing oil, with a probe Ø of 10 mm made of stainless steel.
Influential effect of the ambient temperature	In % of the display range (referring to the deviation from the reference value +23°C)	
On case	0.15% of the display range per K ambient temperature change	0.05% of the display range per K ambient temperature change
On capillary (per m)	0.03% of the display range per K ambient temperature change	No influence
	At higher ambient temperature – higher temperature display	

JUMO GmbH & Co. KG
Delivery address: Mackenrodtstraße 14
36039 Fulda, Germany
Postal address: 36035 Fulda, Germany
Phone: +49 661 6003-0
Fax: +49 661 6003-607
Email: mail@jumo.net
Internet: www.jumo.net

JUMO Instrument Co. Ltd.
JUMO House
Temple Bank, Riverway
Harlow, Essex CM 20 2DY, UK
Phone: +44 1279 63 55 33
Fax: +44 1279 62 50 29
Email: sales@jumo.co.uk
Internet: www.jumo.co.uk

JUMO Process Control, Inc.
6733 Myers Road
East Syracuse, NY 13057, USA
Phone: +1 315 437 5866
Fax: +1 315 437 5860
Email: info.us@jumo.net
Internet: www.jumousa.com

Technical data

Display range (AB)	Display range in °C	Measuring range in °C	Tolerance in K (+/-)
469	-40 to +40	-30 to +30	1.5
566	-30 to +50	-20 to +40	1.5
643	-20 to +120	0 to +100	3.0
807	0 to +60	+10 to +50	1.5
814	0 to +100	+10 to +90	1.5
818	0 to +120	+20 to +100	3.0
826	0 to +160	+20 to +140	3.0
832	0 to +200	+20 to +180	3.0
834	0 to +250	+30 to +220	4.0
926	+50 to +250	+70 to +230	3.0
840	0 to +300	+30 to +270	6.0
927	+50 to +300	+80 to +270	4.0
843	0 to +350	+50 to +300	6.0
932	+50 to +350	+80 to +320	6.0
848	0 to +400	+50 to +350	6.0
851	0 to +450	+50 to +400	6.0
854	0 to +500	+50 to +450	8.0
858	0 to +600	+100 to +500	10.0

JUMO GmbH & Co. KG
Delivery address: Mackenrodtstraße 14
36039 Fulda, Germany
Postal address: 36035 Fulda, Germany
Phone: +49 661 6003-0
Fax: +49 661 6003-607
Email: mail@jumo.net
Internet: www.jumo.net

JUMO Instrument Co. Ltd.
JUMO House
Temple Bank, Riverway
Harlow, Essex CM 20 2DY, UK
Phone: +44 1279 63 55 33
Fax: +44 1279 62 50 29
Email: sales@jumo.co.uk
Internet: www.jumo.co.uk

JUMO Process Control, Inc.
6733 Myers Road
East Syracuse, NY 13057, USA
Phone: +1 315 437 5866
Fax: +1 315 437 5860
Email: info.us@jumo.net
Internet: www.jumousa.com

Dimensions

Types: 608201/1060
608201/1080
608201/1010

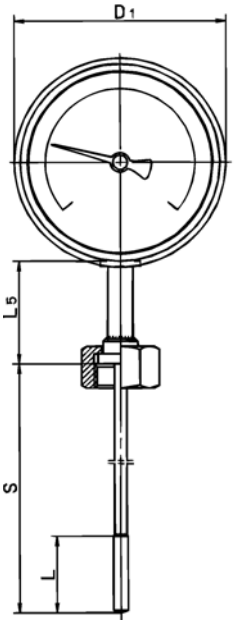

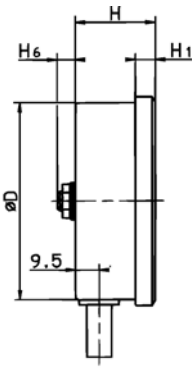

Types: 608201/2060
608201/2080
608201/2010

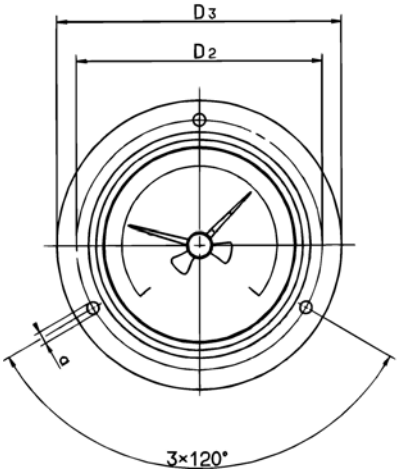

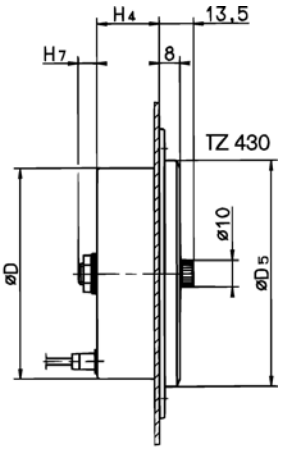

Types: 608201/2160
608201/2180
608201/2110

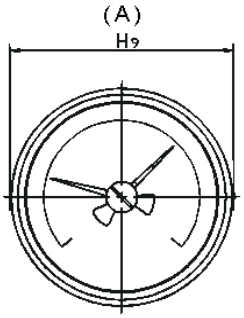

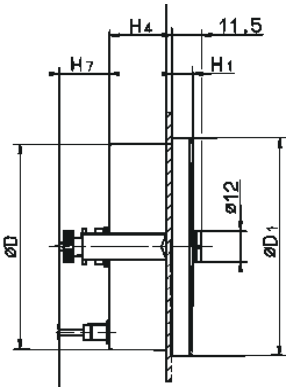

(A) Fastening bar width

JUMO GmbH & Co. KG
Delivery address: Mackenrodtstraße 14
36039 Fulda, Germany
Postal address: 36035 Fulda, Germany
Phone: +49 661 6003-0
Fax: +49 661 6003-607
Email: mail@jumo.net
Internet: www.jumo.net

JUMO Instrument Co. Ltd.
JUMO House
Temple Bank, Riverway
Harlow, Essex CM 20 2DY, UK
Phone: +44 1279 63 55 33
Fax: +44 1279 62 50 29
Email: sales@jumo.co.uk
Internet: www.jumo.co.uk

JUMO Process Control, Inc.
6733 Myers Road
East Syracuse, NY 13057, USA
Phone: +1 315 437 5866
Fax: +1 315 437 5860
Email: info.us@jumo.net
Internet: www.jumousa.com

Dimensions

Types: 608201/2260
608201/2280
608201/2210

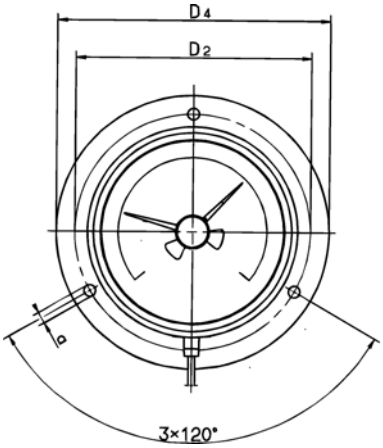

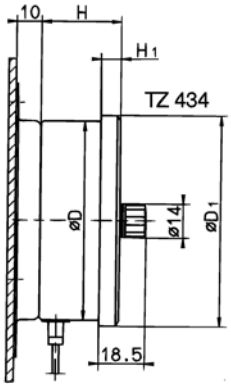

Types: 608201/2360
608201/2380
608201/2310

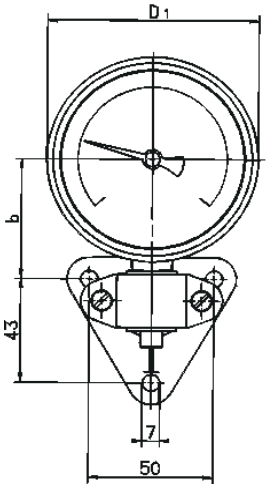

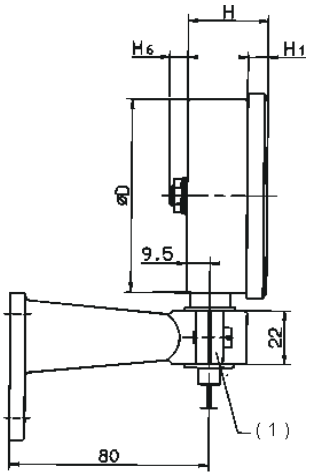

(1) Spigot Ø 20 mm

Case Ø	Panel cut-out Ø
60 mm	62 $^{0.5}_{0}$ mm
80 mm	82 $^{0.5}_{0}$ mm
100 mm	102 $^{0.5}_{0}$ mm

JUMO GmbH & Co. KG
Delivery address: Mackenrodtstraße 14
36039 Fulda, Germany
Postal address: 36035 Fulda, Germany
Phone: +49 661 6003-0
Fax: +49 661 6003-607
Email: mail@jumo.net
Internet: www.jumo.net

JUMO Instrument Co. Ltd.
JUMO House
Temple Bank, Riverway
Harlow, Essex CM 20 2DY, UK
Phone: +44 1279 63 55 33
Fax: +44 1279 62 50 29
Email: sales@jumo.co.uk
Internet: www.jumo.co.uk

JUMO Process Control, Inc.
6733 Myers Road
East Syracuse, NY 13057, USA
Phone: +1 315 437 5866
Fax: +1 315 437 5860
Email: info.us@jumo.net
Internet: www.jumousa.com

Dimensions

Type: 608201/2572

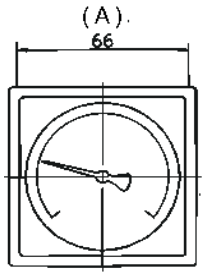

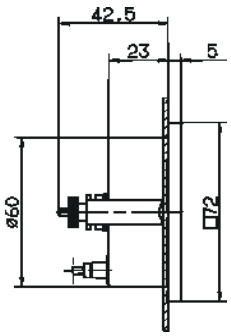

(A) Fastening bar width

Panel cut-out: Ø 62 $^{+0.5}_{0}$ mm

Type: 608201/2496

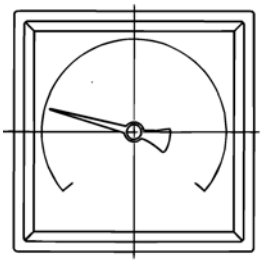

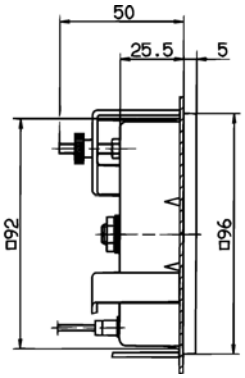

Panel cut-out: 92 x 92 $^{+0.8}_{0}$ mm

Case Ø	H	H_1	H_4	H_6	H_7	H_9	D	D_1	D_2	D_3	D_4	D_5	a	b	L_5
60	30 (36)	7	23 (28)	Approx. 7.5	19.5	66	60	65	75	85	86	66	3.6	39.5 (50)	41.5*
80	32.5	8	24.5			86	80	85	95	110	110	86	4.8	49.5	
100	33 (36)		25 (28)			106	100	106	116	132	132	107.5		59.5 (70)	

All specifications in mm

* With protection tube connection type TA 02, L_5 is ≤ 70.5 mm
With protection tube connection types TA 22 and TA 31, L_5 is = 49.5 mm

( ) -Values apply for TZ 473 or TZ 404

JUMO GmbH & Co. KG
Delivery address: Mackenrodtstraße 14
36039 Fulda, Germany
Postal address: 36035 Fulda, Germany
Phone: +49 661 6003-0
Fax: +49 661 6003-607
Email: mail@jumo.net
Internet: www.jumo.net

JUMO Instrument Co. Ltd.
JUMO House
Temple Bank, Riverway
Harlow, Essex CM 20 2DY, UK
Phone: +44 1279 63 55 33
Fax: +44 1279 62 50 29
Email: sales@jumo.co.uk
Internet: www.jumo.co.uk

JUMO Process Control, Inc.
6733 Myers Road
East Syracuse, NY 13057, USA
Phone: +1 315 437 5866
Fax: +1 315 437 5860
Email: info.us@jumo.net
Internet: www.jumousa.com

Order details

Dial thermometer, class 1.5, type 608201

Order code:	(1)	Basic type
608201		Mechanical dial thermometer, class 1.5
	(2)	**Basic type extension**
1060		Design type: 10; case size: ø 60 mm
1080		Design type: 10; case size: ø 80 mm
1010		Design type: 10; case size: ø 100 mm
2060		Design type: 20; case size: ø 60 mm
2080		Design type: 20; case size: ø 80 mm
2010		Design type: 20; case size: ø 100 mm
2160		Design type: 21; case size: ø 60 mm
2180		Design type: 21; case size: ø 80 mm
2110		Design type: 21; case size: ø 100 mm
2260		Design type: 22; case size: ø 60 mm
2280		Design type: 22; case size: ø 80 mm
2210		Design type: 22; case size: ø 100 mm
2360		Design type: 23; case size: ø 60 mm
2380		Design type: 23; case size: ø 80 mm
2310		Design type: 23; case size: ø 100 mm
2496		Design type: 24; case size: 96 x 96 mm
2572		Design type: 25; case size: 72 x 72 mm
	(3)	**Display range (AB)**
469		-40 to + 40°C
566		-30 to + 50°C
643		-20 to +120°C
807		0 to + 60°C
810		0 to + 80°C
814		0 to +100°C
818		0 to +120°C
826		0 to +160°C
832		0 to +200°C
834		0 to +250°C
926		+50 to +250°C
840		0 to +300°C
927		+50 to +300°C
843		0 to +350°C
932		+50 to +350°C
848		0 to +400°C
851		0 to +450°C
854		0 to +500°C
858		0 to +600°C

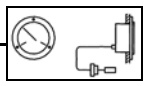
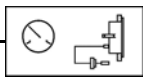
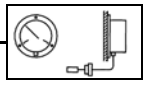
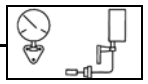
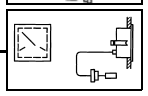
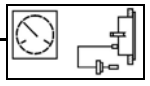

JUMO GmbH & Co. KG
Delivery address: Mackenrodtstraße 14
36039 Fulda, Germany
Postal address: 36035 Fulda, Germany
Phone: +49 661 6003-0
Fax: +49 661 6003-607
Email: mail@jumo.net
Internet: www.jumo.net

JUMO Instrument Co. Ltd.
JUMO House
Temple Bank, Riverway
Harlow, Essex CM 20 2DY, UK
Phone: +44 1279 63 55 33
Fax: +44 1279 62 50 29
Email: sales@jumo.co.uk
Internet: www.jumo.co.uk

JUMO Process Control, Inc.
6733 Myers Road
East Syracuse, NY 13057, USA
Phone: +1 315 437 5866
Fax: +1 315 437 5860
Email: info.us@jumo.net
Internet: www.jumousa.com

Order details

Dial thermometer, class 1.5, type 608201

Order code:

	(4)	**Capillary type (FL)**[1]
00		Without (with rigid connection)
02		FL 02 Cu capillary with Cu textile braiding, approx. Ø 2.5 mm (up to AB end value +300°C)
11		FL11 Cu capillary with PE coating, approx. ø 3.5 mm (up to AB end value +120°C)
17		FL 17 Stainless steel capillary, Ø 1.5 mm
21		FL21 Cu capillary, Ø 1.0 mm (up to AB end value +300°C)
	(5)	**Capillary length**[1]
0		Without (with rigid connection)
1000		1000 mm
2000		2000 mm
3000		3000 mm
4000		4000 mm
5000		5000 mm
. . . .		Special length (specifications in plain text: 1,000 mm increments, maximum length 10,000 mm)
	(6)	**Process connection (PC)**[1]
750		TF01; Temperature probe with stepped support tube
752		TF11; Temperature probe without support tube
843		TA02; Protection tube with union nut and loose screw connection[2]
161		TA03; Protection tube with loose union nut
847		TA06; Displaceable threaded fitting on support tube[2]
311		TA20; Protection tube with loose screw connection and connection collar[2]
872		TA21; Protection tube with loose pressure screw and conical seal
873		TA22; Protection tube with loose pressure screw, conical seal, and loose screw connection[2]
401		TA23; Protection tube with pressure screw and contact pressure spring
848		TA25; Displaceable threaded fitting on capillary[2] (with FL 17 and FL 21 only) 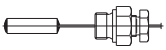
913		SH 07; Screw-in sleeve, multi-sectional, with clamping piece and fixing screw[2] (with TF 01)
820		SH 09; Weld-in sleeve, multi-sectional, with clamping piece and fixing screw (not with FL 21 – weld collar with steel 1.4515) (with TF 01)
876		SH10; Screw-in sleeve, multi-sectional[2]
871		SH11; Screw-in sleeve, multi-sectional[2]
	(7)	**Diameter of process connection (PC)**[1]
6		Ø 6 mm
8		Ø 8 mm
10		Ø 10 mm
11		Ø 11 mm
12		Ø 12 mm

[1] For description and special features refer to data sheet 608730.
[2] Screw-in spigot according to DIN 3852 form A).
[3] List extra codes in sequence, separated by commas·

JUMO GmbH & Co. KG
Delivery address: Mackenrodtstraße 14
36039 Fulda, Germany
Postal address: 36035 Fulda, Germany
Phone: +49 661 6003-0
Fax: +49 661 6003-607
Email: mail@jumo.net
Internet: www.jumo.net

JUMO Instrument Co. Ltd.
JUMO House
Temple Bank, Riverway
Harlow, Essex CM 20 2DY, UK
Phone: +44 1279 63 55 33
Fax: +44 1279 62 50 29
Email: sales@jumo.co.uk
Internet: www.jumo.co.uk

JUMO Process Control, Inc.
6733 Myers Road
East Syracuse, NY 13057, USA
Phone: +1 315 437 5866
Fax: +1 315 437 5860
Email: info.us@jumo.net
Internet: www.jumousa.com

Order details

Dial thermometer, class 1.5, type 608201

Order code:

	(8)	**Thread type of process connection (PC)**[1]
000		Without thread (for TF 01 and TF 11)
103		Screw connection $G^3/_8$
104		Screw connection $G^1/_2$
105		Screw connection $G^3/_4$
114		Screw connection M 10 × 1 (only for TA 23 and SH 11)
	(9)	**Material, probe / support tube**[1]
26		Stainless steel (CrNi, 1.4571)
96		Copper (Cu) / brass (CuZn) (up to 200°C)
95		Stainless steel (CrNi, 1.4571) – probe / brass (CuZn) – support tube (from 250°C)
	(10)	**Material of process connection (PC)**[1]
00		Without (only TF 01 and TF 11)
26		Stainless steel (CrNi, 1.4571)
46		Brass (CuZn)
	(11)	**Insertion length, process connection (PC)**[1] **(dimension "EL" or "S")**
0		Minimum insertion length TF 11 (active probe dimension)
50		50 mm
100		100 mm
150		150 mm
200		200 mm
. . .		Special length (specifications in plain text – 50 mm increments)
	(12)	**Extra codes (TZ)**
000		Without extra code
315		Strain relief spring on case and probe (not with FL 21)
404		Protection type IP 65 according to EN 60529 (only with basic type extension: 2060, 2260, 2360, 2010, 2210, 2310)
430		Drag indicator, with case diameter 60, 80 and 100 mm (not with TZ 404)
434		Drag indicator can be adjusted with a screwdriver, protected by a cover (not possible with TZ 404)
522		Customized scale

Special versions upon request!

Order code:

(1)		(2)		(3)		(4)		(5)		(6)		(7)		(8)		(9)		(10)		(11)		(12)	
608201	/	. . . .	-	. . .	-	. .	-	. . . .	-	. . .	-	. .	-	. . .	-	. .	-	. .	-	. . .	/	. .	, . . .

Order example:

608201	/	1010	-	818	-	00	-	0	-	750	-	8	-	000	-	26	-	26	-	100	/	000[3]

[1] For description and special features refer to data sheet 608730.
[2] Screw-in spigot according to DIN 3852 form A.
[3] List extra codes in sequence, separated by commas.

JUMO GmbH & Co. KG
Delivery address: Mackenrodtstraße 14
36039 Fulda, Germany
Postal address: 36035 Fulda, Germany
Phone: +49 661 6003-0
Fax: +49 661 6003-607
E-mail: mail@jumo.net
Internet: www.jumo.net

JUMO Instrument Co. Ltd.
JUMO House
Temple Bank, Riverway
Harlow, Essex CM20 2DY, UK
Phone: +44 1279 635533
Fax: +44 1279 635262
E-mail: sales@jumo.co.uk
Internet: www.jumo.co.uk

JUMO Process Control, Inc.
6733 Myers Road
East Syracuse, NY 13057, USA
Phone: 315-437-5866
1-800-554-5866
Fax: 315-437-5860
E-mail: info.us@jumo.net
Internet: www.jumousa.com

Dial Thermometer

Type 608225

Special features

- Class 1
- Display ranges from -40°C to +600°C
- Temperature indicator as built-in or add-on device
  Stainless steel case with bayonet connection
- Case size: Ø 100 mm and Ø 160 mm
- Protection type IP 65

Type 608225/
1016

Brief description

Dial thermometers are universal devices used for temperature measurement and monitoring. The temperature-dependent volume change in a measuring system filled with liquid or the temperature-dependent pressure change in a measuring system filled with gas is converted to a rotational movement of the actual value indicator by a bourdon tube; no transmission gear is required.

The overall system is extremely warp resistant due to the direct connection of the indicator to the measuring system. Oscillations are transferred to the indicator only to a limited degree.

Technical data

Case	Stainless steel case with bayonet connection (1.4301)
Protection type	IP 65 according to DIN EN 60529
Front pane	Glass with extra code 434 made of polycarbonate
Scale	White, with black lettering
Display	Class 1 according to DIN EN 13190
Strain relief spring	For capillary devices on the case and the temperature probe
Display correction	On the rear (no display correction with design type 01)
Limit value temperatures	For transport and storage -20°C to +70°C (for display range 0 to +60°C up to max. 65°C)
Rated position (NL)	Any

	Liquid filling	**Gas filling**
Measuring system	Display range (AB) ≤ 350°C	Display range (AB) ≥ 400°C
Time constant $t_{0.632}$	Approx. 12 s, measured in water, with a probe Ø of 6 mm made of copper	Approx. 4 s, measured in oil, with a probe Ø of 10 mm made of stainless steel.
Influential effect of the ambient temperature	In % of the display range (referring to the deviation from the reference value +23°C)	
On case	0.15% of the display range per K ambient temperature change	0.05% of the display range per K ambient temperature change
On capillary (per m)	0.03% of the display range per K ambient temperature change	No influence
	At higher ambient temperature – higher temperature display – lower switching point	

JUMO GmbH & Co. KG
Delivery address: Mackenrodtstraße 14
36039 Fulda, Germany
Postal address: 36035 Fulda, Germany
Phone: +49 661 6003-0
Fax: +49 661 6003-607
E-mail: mail@jumo.net
Internet: www.jumo.net

JUMO Instrument Co. Ltd.
JUMO House
Temple Bank, Riverway
Harlow, Essex CM20 2DY, UK
Phone: +44 1279 635533
Fax: +44 1279 635262
E-mail: sales@jumo.co.uk
Internet: www.jumo.co.uk

JUMO Process Control, Inc.
6733 Myers Road
East Syracuse, NY 13057, USA
Phone: 315-437-5866
1-800-554-5866
Fax: 315-437-5860
E-mail: info.us@jumo.net
Internet: www.jumousa.com

Display range (AB)	Display range in °C	Measuring range in °C	Tolerance in K (+/-)
643	-20 to +120	0 to +100	2.0
357	-50 to +50	-40 to +40	1.0
810	0 to +80	+10 to +70	1.0
814	0 to +100	+10 to +90	1.0
818	0 to +120	+20 to +100	1.0
826	0 to +160	+20 to +140	2.0
832	0 to +200	+20 to +180	2.0
834	0 to +250	+30 to +220	2.5
840	0 to +300	+30 to +270	5.0
854	0 to +500	+50 to +450	5.0

JUMO GmbH & Co. KG
Delivery address: Mackenrodtstraße 14
36039 Fulda, Germany
Postal address: 36035 Fulda, Germany
Phone: +49 661 6003-0
Fax: +49 661 6003-607
E-mail: mail@jumo.net
Internet: www.jumo.net

JUMO Instrument Co. Ltd.
JUMO House
Temple Bank, Riverway
Harlow, Essex CM20 2DY, UK
Phone: +44 1279 635533
Fax: +44 1279 635262
E-mail: sales@jumo.co.uk
Internet: www.jumo.co.uk

JUMO Process Control, Inc.
6733 Myers Road
East Syracuse, NY 13057, USA
Phone: 315-437-5866
1-800-554-5866
Fax: 315-437-5860
E-mail: info.us@jumo.net
Internet: www.jumousa.com

Dimensions

Types: 608225/0110
608225/0116

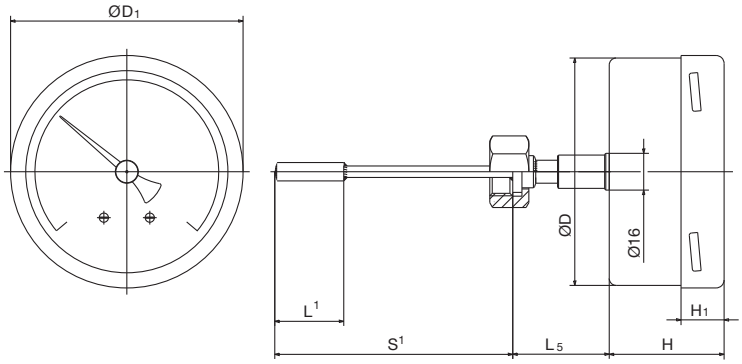

Types: 608225/1010
608225/1016

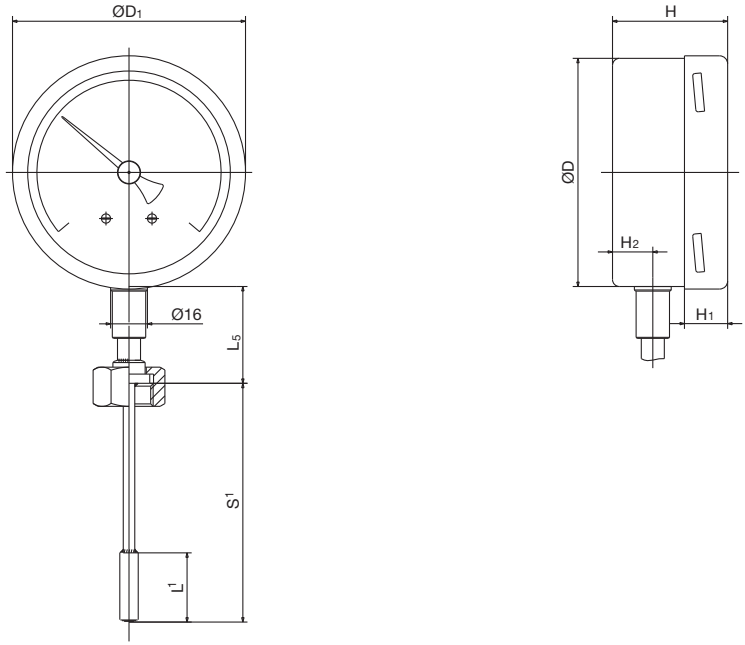

Types: 608225/2010
608225/2016

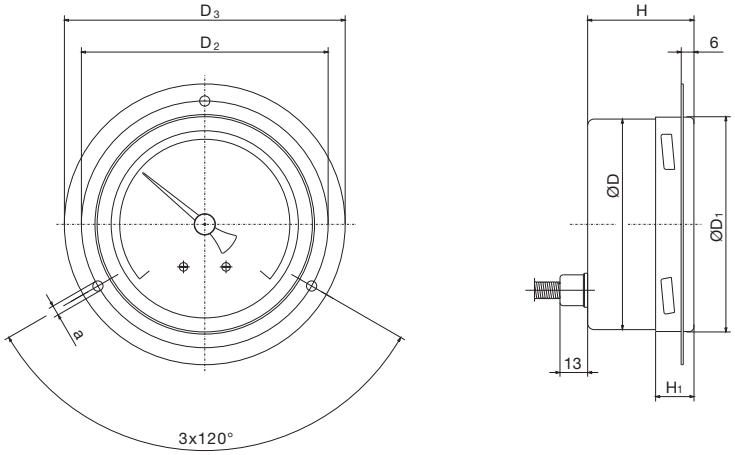

Panel cut-out for case
Ø 100 mm = $105.5^{+0.5}$mm
Ø 160 mm = $165.5^{+0.5}$mm

For length specifications, see data sheet 608730

JUMO GmbH & Co. KG
Delivery address: Mackenrodtstraße 14
36039 Fulda, Germany
Postal address: 36035 Fulda, Germany
Phone: +49 661 6003-0
Fax: +49 661 6003-607
E-mail: mail@jumo.net
Internet: www.jumo.net

JUMO Instrument Co. Ltd.
JUMO House
Temple Bank, Riverway
Harlow, Essex CM20 2DY, UK
Phone: +44 1279 635533
Fax: +44 1279 635262
E-mail: sales@jumo.co.uk
Internet: www.jumo.co.uk

JUMO Process Control, Inc.
6733 Myers Road
East Syracuse, NY 13057, USA
Phone: 315-437-5866
1-800-554-5866
Fax: 315-437-5860
E-mail: info.us@jumo.net
Internet: www.jumousa.com

Dimensions

Types: 608225/2210
608225/2216

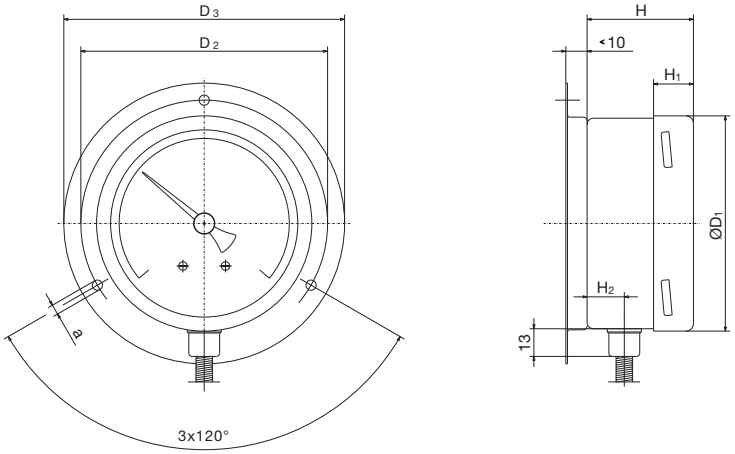

Types: 608225/2310
608225/2316

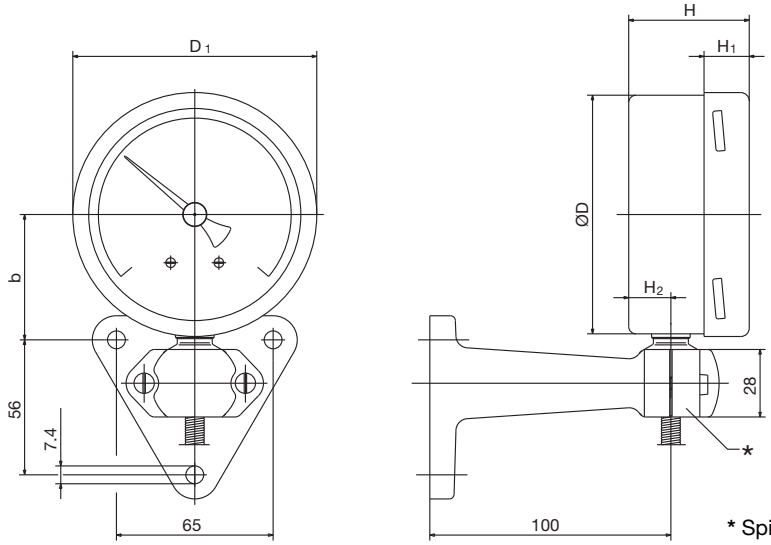

* Spigot Ø 26 mm

Bracket for measuring device according to DIN 16281

Case Ø	H	H_1	H_2	D	D_1	D_2	D_3	a	b	L_5
100	50	19	17.5	99	101.5	116	132	4.8	52	40[1]
160	50	21		159	161.5	178	196	5.8	82	

[1] With protection tube connection type TA 02, L_5 is ≤ 69 mm

JUMO GmbH & Co. KG
Delivery address: Mackenrodtstraße 14
36039 Fulda, Germany
Postal address: 36035 Fulda, Germany
Phone: +49 661 6003-0
Fax: +49 661 6003-607
E-mail: mail@jumo.net
Internet: www.jumo.net

JUMO Instrument Co. Ltd.
JUMO House
Temple Bank, Riverway
Harlow, Essex CM20 2DY, UK
Phone: +44 1279 635533
Fax: +44 1279 635262
E-mail: sales@jumo.co.uk
Internet: www.jumo.co.uk

JUMO Process Control, Inc.
6733 Myers Road
East Syracuse, NY 13057, USA
Phone: 315-437-5866
1-800-554-5866
Fax: 315-437-5860
E-mail: info.us@jumo.net
Internet: www.jumousa.com

Order details

Dial thermometer, class 1, type 608225

Order code	(1)	Basic type
608225		Mechanical dial thermometer

	(2)	Basic type extension
0110		Design type: 01; case size: ø 100 mm
0116		Design type: 01; case size: ø 160 mm
1010		Design type: 10; case size: ø 100 mm
1016		Design type: 10; case size: ø 160 mm
2010		Design type: 20; case size: ø 100 mm
2016		Design type: 20; case size: ø 160 mm
2210		Design type: 22; case size: ø 100 mm
2216		Design type: 22; case size: ø 160 mm
2310		Design type: 23; case size: ø 100 mm
2316		Design type: 23; case size: ø 160 mm

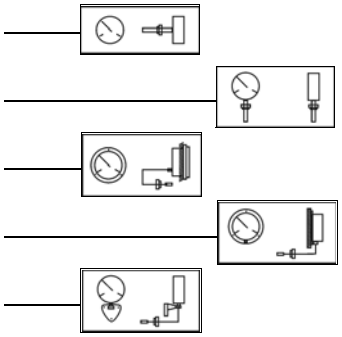

	(3)	Display range (AB)
469		-40 to +40°C;
566		-30 to +50°C;
807		0 to +60°C;
810		0 to +80°C;
814		0 to +100°C;
818		0 to +120°C;
826		0 to +160°C;
832		0 to +200°C;
834		0 to +250°C;
840		0 to +300°C;
843		0 to +350°C;
848		0 to +400°C;
854		0 to +500°C;

	(4)	Capillary type (FL)[1]
00		Without (with rigid connection)
04		FL04 Stainless steel capillary (1.4571), ø 2.2 mm

	(5)	Capillary length[1]
0		Without (with rigid connection)
1000		1000 mm
2000		2000 mm
3000		3000 mm
4000		4000 mm
5000		5000 mm
. . . .		Special length (specifications in plain text: 1,000 mm increments, maximum length 10,000 mm)

	(6)	Process connection (PC)[1]
750	TF01	Temperature probe with stepped support tube
753	TF05	Temperature probe with plane support tube
752	TF11	Temperature probe without support tube
843	TA02	Protection tube with union nut and loose screw connection [2]
161	TA03	Protection tube with loose union nut (with TF01)
846	TA04	Protection tube with fixed hexagon male connector [2]
847	TA06	Displaceable threaded fitting on support tube [2]
891	SH05	Screw-in sleeve, multi-sectional[2] (only with ø 14 mm)
913	SH07	Screw-in sleeve, multi-sectional, with clamping piece and fixing screw [2]

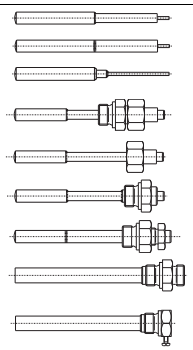

JUMO GmbH & Co. KG
Delivery address: Mackenrodtstraße 14
36039 Fulda, Germany
Postal address: 36035 Fulda, Germany
Phone: +49 661 6003-0
Fax: +49 661 6003-607
E-mail: mail@jumo.net
Internet: www.jumo.net

JUMO Instrument Co. Ltd.
JUMO House
Temple Bank, Riverway
Harlow, Essex CM20 2DY, UK
Phone: +44 1279 635533
Fax: +44 1279 635262
E-mail: sales@jumo.co.uk
Internet: www.jumo.co.uk

JUMO Process Control, Inc.
6733 Myers Road
East Syracuse, NY 13057, USA
Phone: 315-437-5866
1-800-554-5866
Fax: 315-437-5860
E-mail: info.us@jumo.net
Internet: www.jumousa.com

Order details

Dial thermometer, class 1, type 608225

Order code		
	(7)	**Diameter of process connection (PC)[1]**
6		ø 6 mm
8		ø 8 mm
10		ø 10 mm
14		ø 14 mm (only for SH05)
	(8)	**Thread type of process connection (PC)[1]**
000		Without thread (for TF 01, TF 05 and TF 11)
103		Screw connection G 3/8
104		Screw connection G 1/2
105		Screw connection G 3/4
	(9)	**Material of process connection (PC)[1]**
26		Stainless steel (1.4571)
97		Stainless steel (1.4571) – TF / Brass – TA, SH
	(10)	**Insertion length, process connection (PC)[1] (dimension "EL" or "S")**
0		Minimum insertion length TF 11 (active probe dimension)
50		50 mm
100		100 mm
150		150 mm
200		200 mm
. . .		Special length (specifications in plain text – 50 mm increments)
	(11)	**Extra codes (TZ)**
000		Without extra code
362		Ex protection according to directive 2014/34/EU
434		Drag indicator can be adjusted with a screwdriver, protected by a cover
522		Customized scale

Special versions upon request!

Order code:

(1)		(2)		(3)		(4)		(5)		(6)		(7)		(8)		(9)		(10)		(11)		
608225	/	. . . .	-	. . .	-	. .	-	. . . .	-	. . .	-	. .	-	. . .	-	. .	-	. . .	/	. . .	,	. . .

Order example:

608225	/	2010	-	818	-	04	-	2000	-	750	-	8	-	000	-	26	-	100	/	000[3]

[1] For description and special features refer to data sheet 608730
[2] Screw-in spigot according to DIN 3852 form A
[3] List extra codes in sequence, separated by commas.

JUMO GmbH & Co. KG
Delivery address: Mackenrodtstraße 14
36039 Fulda, Germany
Postal address: 36035 Fulda, Germany
Phone: +49 661 6003-0
Fax: +49 661 6003-607
E-mail: mail@jumo.net
Internet: www.jumo.net

JUMO Instrument Co. Ltd.
JUMO House
Temple Bank, Riverway
Harlow, Essex CM20 2DY, UK
Phone: +44 1279 635533
Fax: +44 1279 635262
E-mail: sales@jumo.co.uk
Internet: www.jumo.co.uk

JUMO Process Control, Inc.
6733 Myers Road
East Syracuse, NY 13057, USA
Phone: 315-437-5866
1-800-554-5866
Fax: 315-437-5860
E-mail: info.us@jumo.net
Internet: www.jumousa.com

Bimetal Temperature Switch

Special features

- Electromechanical temperature switch with a fixed switching temperature
- Protection type IP52, IP65 and IP67
- Simple installation
- Switching capacity up to 10 A

608301/10-...-..-..-01

608301/30-...-..-..-36

Brief description

Temperature switches are used in industry in general for limiting temperature. For example, they switch the machine off in the event of overheating or switch a fan on to cool the device.

Function
The temperature measurement is carried out using a bimetal disc that switches when the rated switching temperature is reached. After cooling down to the switchback temperature, the switch returns to its original state. The switchback temperature is typically 15 to 30 K below the switching temperature.

Contact version
The bimetal temperature switches type 608301 are supplied with two switching outputs.
An N/C (normally closed) contact opens an electrical circuit and switches a machine off.
An N/O (normally open) contact closes an electrical circuit when the switching temperature is reached in order, for example, to activate a fan or a signal lamp.
In both cases, the contacts return to their original state after cooling back to below the switch-back temperature, so that the monitored device can work again in normal mode.

The bimetal switches are RoHS-compliant and free of cadmium.

608301/10-...-..-..-11

608301/10-...-..-..-61

JUMO GmbH & Co. KG
Delivery address: Mackenrodtstraße 14
36039 Fulda, Germany
Postal address: 36035 Fulda, Germany
Phone: +49 661 6003-0
Fax: +49 661 6003-607
E-mail: mail@jumo.net
Internet: www.jumo.net

JUMO Instrument Co. Ltd.
JUMO House
Temple Bank, Riverway
Harlow, Essex CM20 2DY, UK
Phone: +44 1279 635533
Fax: +44 1279 635262
E-mail: sales@jumo.co.uk
Internet: www.jumo.co.uk

JUMO Process Control, Inc.
6733 Myers Road
East Syracuse, NY 13057, USA
Phone: 315-437-5866
1-800-554-5866
Fax: 315-437-5860
E-mail: info.us@jumo.net
Internet: www.jumousa.com

Technical data

Minimum order quantity 50 items

Snap-action switch 608301/10	**Tab connector A 6.3-08**	**Connecting cable with cable fitting**	**Potted connecting cable** without | with protection conductor		**Plug connector for cable connection** Acc. to EN 175301-803 (DIN 43650)	**Plug connector M 12 x 1**
Fitting	Brass (CW614N) or stainless steel (1.4305); screw-in spigot similar to DIN 3852					
	Form A for sealing with sealing ring					
Protection type	IP52	IP65	IP67		IP65	IP67
Electrical contact, snap-action switch Connection	A 6.3-0.8 acc. to DIN 46244	Cable diameter approx. 6.5 mm connection cross-section 0.75 mm²			Cable diameter 6 to 8 mm; Connect terminals 1, 2, and protection conductor	- -
Switching capacity	DC 30 V, +10/-15%, max. 5 A					- -
	Max. AC 48 V, cos φ = 0.9 10 A	Max. AC 48 V, cos φ = 0.9 10 A		Max. AC 250 V, cos φ = 0.9 10 A		- -
Switching capacity with TZ 702	DC 6 to 30 V, AC 6 to 48 V, 10 to 100 mA			DC 6 to 30 V, AC 6 to 120 V, 10 to 100 mA		- -
Max. ampacity	- -	At ambient temperature on the line/cable Up to 50 °C 10 A Up to 75 °C 7.3 A Up to 85 °C 4.2 A			- -	
Contact resistance	< 30 mΩ					
Dielectric strength	AC 1500 V/1 min					

Minimum order quantity 50 items

Slow-action contact 608301/20	**Tab connector A 6.3-08**	**Connecting cable with cable fitting**	**Potted connecting cable** without | with protection conductor		**Plug connector for cable connection** Acc. to EN 175301-803 (DIN 43650)	**Plug connector M 12 x 1**
Fitting	Brass (CW614N) or stainless steel (1.4305); screw-in spigot similar to DIN 3852					
	Form A for sealing with sealing ring					
Protection type	IP52	IP65	IP67		IP65	IP67
Electrical contact, slow-action contact Connection	- -	Cable diameter approx. 4.5 mm connection cross-section 0.5 mm²			Cable diameter 6 to 8 mm; connect terminals 1 and 2; Protection conductor not connected	- -
Switching capacity	- -	DC 12 V, 8 A DC 24 V, 4 A DC 30 V, 3 A Max. AC 48 V, 6 A	- -	- -	DC 12 V, 8 A DC 24 V, 4 A DC 30 V, 3 A Max. AC 48 V, 6 A	- -
Max. ampacity	- -	At ambient temperature on the line/cable Up to 85 °C 8 A Up to 105 °C 3.7 A			- -	

JUMO GmbH & Co. KG
Delivery address: Mackenrodtstraße 14
36039 Fulda, Germany
Postal address: 36035 Fulda, Germany
Phone: +49 661 6003-0
Fax: +49 661 6003-607
E-mail: mail@jumo.net
Internet: www.jumo.net

JUMO Instrument Co. Ltd.
JUMO House
Temple Bank, Riverway
Harlow, Essex CM20 2DY, UK
Phone: +44 1279 635533
Fax: +44 1279 635262
E-mail: sales@jumo.co.uk
Internet: www.jumo.co.uk

JUMO Process Control, Inc.
6733 Myers Road
East Syracuse, NY 13057, USA
Phone: 315-437-5866
1-800-554-5866
Fax: 315-437-5860
E-mail: info.us@jumo.net
Internet: www.jumousa.com

Technical data

Minimum order quantity 50 items

Compact snap-action switch 608301/30	**Tab connector A 6.3-08**	**Connecting cable with cable fitting**	**Potted connecting cable** without / with protection conductor		**Plug connector for cable connection** Acc. to EN 175301-803 (DIN 43650)	**Plug connector M 12 x 1**
Fitting	Brass (CW614N) or stainless steel (1.4305); screw-in spigot similar to DIN 3852					
	Form A for sealing with sealing ring					
Protection type	IP52	IP65	IP67		IP65	IP67
Electrical contact, compact snap-action switch Connection	- -	Cable diameter approx. 6.5 mm; Connection cross-section 0.75 mm²	- -	- -	Cable diameter 6 to 8 mm; Connect terminals 1, 2, and protection conductor	Connect terminals 1 and 2
Switching capacity	- -	**N/C contact** max. AC 48 V, 50/60 Hz, cos φ = 0.95 (0.6) 2.5 A (1.6 A) **N/O contact** max. AC 48 V, 50/60 Hz, cos φ = 0.95 (0.6) 2.0 A/1.6 A	- -	- -	**N/C contact** max. AC 250 V, 50/60 Hz, cos φ = 0.95 (0.6) 2.5 A (1.6 A) **N/O contact** max. AC 250 V, 50/60 Hz, cos φ = 0.95 (0.6) 2.0 A/1.6 A	**N/C contact** max. AC 48 V, 50/60 Hz, cos φ = 0.95 (0.6) 2.5 A (1.6 A) **N/O contact** max. AC 48 V, 50/60 Hz, cos φ = 0.95 (0.6) 2.0 A/1.6 A
Cable	- -	Ambient temperature on the line/cable Max. 90 °C			- -	
Contact resistance	< 50 mΩ					
Dielectric strength	AC 1500 V/1 min					

	608301/10 Snap-action switch	**608301/20 Slow-action contact**	**608301/30 Compact snap-action switch**
Switching temperature Increments 5K	0 °C to +140 °C	+10 °C to +140 °C	+60 °C to +140 °C
Switching differential	Approx. 15 to 30 K below the switching temperature	Approx. 3 to 12 K below the switching temperature	Approx. 20 to 45 K below the switching temperature
Switching cycles	With AC 250 V, 10 A min. 100,000 AC 120 V, 15 A min. 100,000 AC 48 V, 15 A min. 100,000 DC 30 V, 5 A min. 10,000 DC 24 V, 5 A min. 10,000 DC 12 V, 5 A min. 10,000 DC 6 V, 5 A min. 10,000	With AC 48 V, 6 A min. 100,000 DC 30 V, 3 A min. 5,000 DC 24 V, 4 A min. 5,000 DC 12 V, 8 A min. 5,000	With AC 250 V, 2.5 A min. 10,000
Switching point accuracy	Switching temperature: Up to 130 °C ± 5 K, above 130 °C ± 10 K at a temperature change rate of 1 K/min		
Vibration strength According to EN 60068-2-6	10 g (with a frequency of 50 Hz and an amplitude of ± 0.75 mm)	- -	10 g (with a frequency of 10 to 1,000 Hz and an amplitude of ± 0.75 mm)
Response time	t0.9 value time approx. 3.5 min	t0.9 value time approx. 3.0 min	t0.9 value time approx. 1.5 min,
	measured in flowing oil		
Switching output (SA)	N/C contact SA01	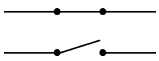	relative to the rising temperature
	or N/O contact SA02		
Rated position	Any		
Weight	Approx. 50 g		

JUMO GmbH & Co. KG
Delivery address: Mackenrodtstraße 14
36039 Fulda, Germany
Postal address: 36035 Fulda, Germany
Phone: +49 661 6003-0
Fax: +49 661 6003-607
E-mail: mail@jumo.net
Internet: www.jumo.net

JUMO Instrument Co. Ltd.
JUMO House
Temple Bank, Riverway
Harlow, Essex CM20 2DY, UK
Phone: +44 1279 635533
Fax: +44 1279 635262
E-mail: sales@jumo.co.uk
Internet: www.jumo.co.uk

JUMO Process Control, Inc.
6733 Myers Road
East Syracuse, NY 13057, USA
Phone: 315-437-5866
1-800-554-5866
Fax: 315-437-5860
E-mail: info.us@jumo.net
Internet: www.jumousa.com

Dimensions

Type:
608301/10-...-..-..-01

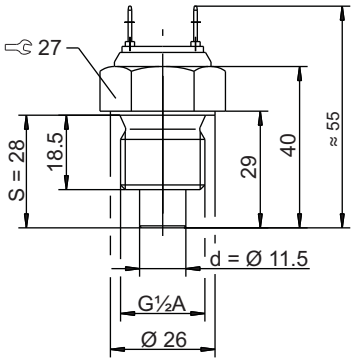

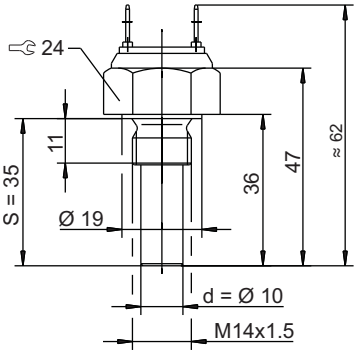

Type:
608301/10-...-..-..-02

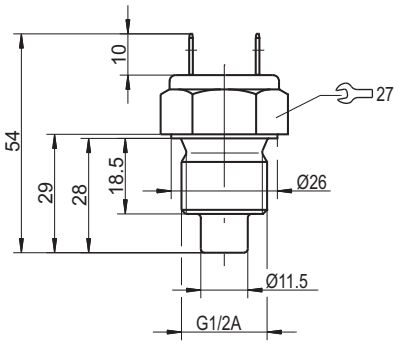

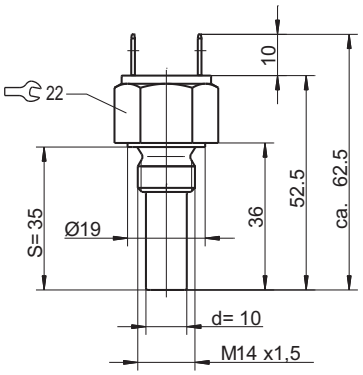

Type:
608301/10-...-..-..-11

Version without protection conductor

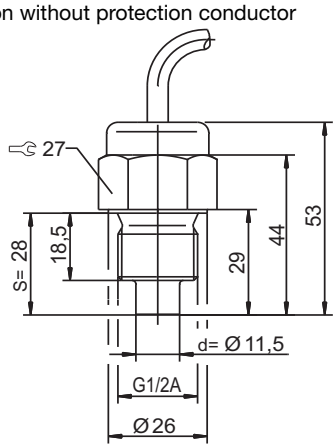

Version with protection conductor

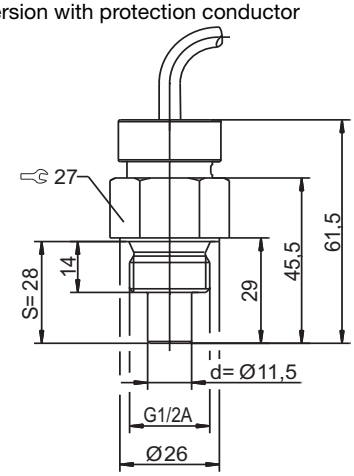

JUMO GmbH & Co. KG
Delivery address: Mackenrodtstraße 14
36039 Fulda, Germany
Postal address: 36035 Fulda, Germany
Phone: +49 661 6003-0
Fax: +49 661 6003-607
E-mail: mail@jumo.net
Internet: www.jumo.net

JUMO Instrument Co. Ltd.
JUMO House
Temple Bank, Riverway
Harlow, Essex CM20 2DY, UK
Phone: +44 1279 635533
Fax: +44 1279 635262
E-mail: sales@jumo.co.uk
Internet: www.jumo.co.uk

JUMO Process Control, Inc.
6733 Myers Road
East Syracuse, NY 13057, USA
Phone: 315-437-5866
1-800-554-5866
Fax: 315-437-5860
E-mail: info.us@jumo.net
Internet: www.jumousa.com

Type:
608301/10-...-..-..-61

Version with protection conductor

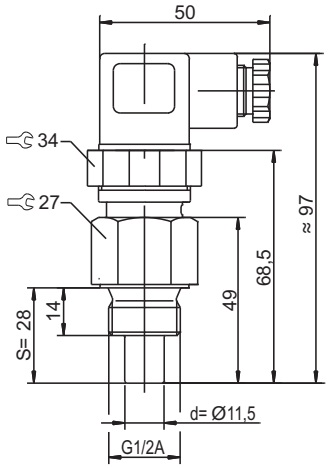

Type:
608301/20-...-..-..-18

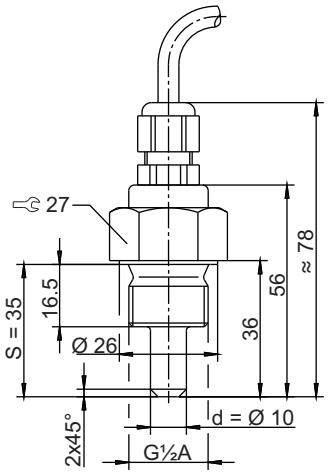

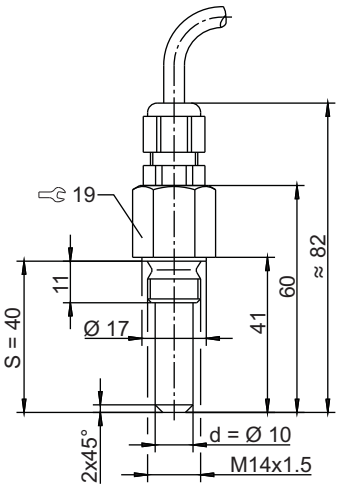

Type:
608301/20-...-..-..-61

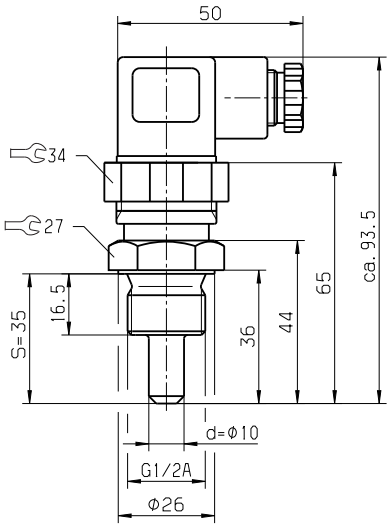

JUMO GmbH & Co. KG
Delivery address: Mackenrodtstraße 14
36039 Fulda, Germany
Postal address: 36035 Fulda, Germany
Phone: +49 661 6003-0
Fax: +49 661 6003-607
E-mail: mail@jumo.net
Internet: www.jumo.net

JUMO Instrument Co. Ltd.
JUMO House
Temple Bank, Riverway
Harlow, Essex CM20 2DY, UK
Phone: +44 1279 635533
Fax: +44 1279 635262
E-mail: sales@jumo.co.uk
Internet: www.jumo.co.uk

JUMO Process Control, Inc.
6733 Myers Road
East Syracuse, NY 13057, USA
Phone: 315-437-5866
1-800-554-5866
Fax: 315-437-5860
E-mail: info.us@jumo.net
Internet: www.jumousa.com

Dimensions

Type:
608301/30-...-..-..-36

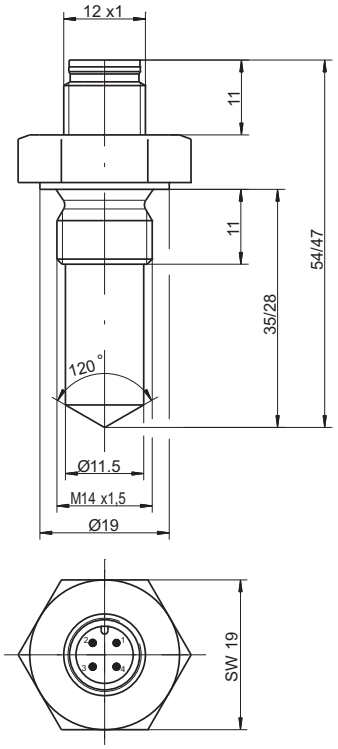

Type:
608301/30-...-..-..-61

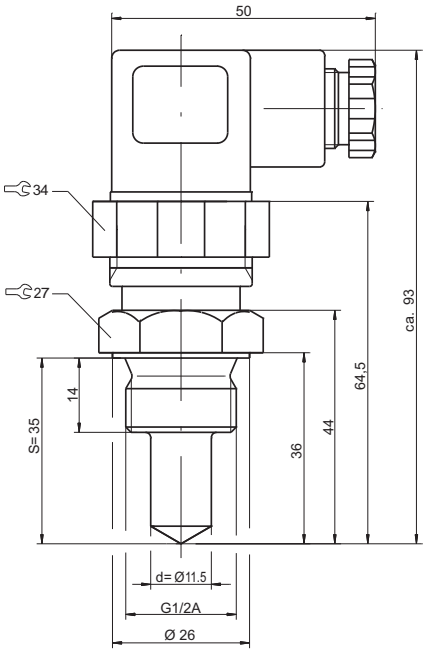

JUMO GmbH & Co. KG
Delivery address: Mackenrodtstraße 14
36039 Fulda, Germany
Postal address: 36035 Fulda, Germany
Phone: +49 661 6003-0
Fax: +49 661 6003-607
E-mail: mail@jumo.net
Internet: www.jumo.net

JUMO Instrument Co. Ltd.
JUMO House
Temple Bank, Riverway
Harlow, Essex CM20 2DY, UK
Phone: +44 1279 635533
Fax: +44 1279 635262
E-mail: sales@jumo.co.uk
Internet: www.jumo.co.uk

JUMO Process Control, Inc.
6733 Myers Road
East Syracuse, NY 13057, USA
Phone: 315-437-5866
1-800-554-5866
Fax: 315-437-5860
E-mail: info.us@jumo.net
Internet: www.jumousa.com

Order details

Bimetal temperature switch, type 608301

Minimum order quantity 50 items

Order code				
	(1)	**Basic type**		
608301		Bimetal temperature switches		
	(2)	**Basic type extension**		
10		Snap-action switch		
20		Slow-action contact		
30		Compact snap-action switch		
	(3)	**Switching temperature**	(with cable version, with due consideration of the ambient temperature/ampacity on the cable!)	
. . .		from +0 °C to +140 °C	Increments 5K	(with basic type extension 608301/10)
. . .		from +10 °C to +140 °C	Increments 5K	(with basic type extension 608301/20)
. . .		from +60 °C to +140 °C	Increments 5K (e.g. 85 ≙ + 85 °C)	(with basic type extension 608301/30)
	(4)	**Switching output**		
98		N/C contact (SA01)		
99		N/O contact (SA02)		
	(5)	**Rated voltage**		
50		AC 6 to 48 V		(with basic type extension 608301/10, /20, /30 and /10 with TZ 702)
51		AC 6 to 230 V		(with basic type extension 608301/10 and /30)
52		DC 12 to 30 V		(with basic type extension 608301/20)
53		AC 6 to 120 V		(with basic type extension 608301/10 with TZ 702)
54		DC 6 to 30 V		(with basic type extension 608301/10 and /10 with TZ 702)
	(6)	**Electrical connection**		
01		Tab connector A 6.3 – 0.8 DIN 46244		(not with rated voltage 51 (AC 0 to 230 V) (not with basic type extension 608301/20 and /30)
02		Tab connector A 6.3 – 0.8 DIN 46244, potted		(not with rated voltage 51 (AC 0 to 230 V) (not with basic type extension 608301/20 and /30)
61		Plug connector for cable connection acc. to EN 175301-803 (DIN 43650)		
18		Connecting cable with cable fitting		(not with rated voltage 51 (AC 0 to 230 V) (not with basic type extension 608301/10)
11		Potted connecting cable		(not with basic type extension 608301/20 and /30)
36		Round plug M 12 × 1		(only in connection with basic type extension 608301/30)
	(7)	**Process connection material**		
50		Brass (CuZn)		
78		Stainless steel (CrNi, 1.4305)		
	(8)	**Diameter of process connection (PC), dimension "d"** (For selection see table "Possible combinations")		
10		10 mm		
11.5		11.5 mm		
	(9)	**Thread type of process connection (PC)**		
121		Screw connection M 14 × 1.5		
104		Screw connection G $^1/_2$		

JUMO GmbH & Co. KG
Delivery address: Mackenrodtstraße 14
36039 Fulda, Germany
Postal address: 36035 Fulda, Germany
Phone: +49 661 6003-0
Fax: +49 661 6003-607
E-mail: mail@jumo.net
Internet: www.jumo.net

JUMO Instrument Co. Ltd.
JUMO House
Temple Bank, Riverway
Harlow, Essex CM20 2DY, UK
Phone: +44 1279 635533
Fax: +44 1279 635262
E-mail: sales@jumo.co.uk
Internet: www.jumo.co.uk

JUMO Process Control, Inc.
6733 Myers Road
East Syracuse, NY 13057, USA
Phone: 315-437-5866
1-800-554-5866
Fax: 315-437-5860
E-mail: info.us@jumo.net
Internet: www.jumousa.com

(10) Insertion length of process connection (PC), dimension "S" (For selection see table "Possible combinations")

28	28 mm
35	35 mm
40	40 mm

(11) Cable length

0	None
1000	1000 mm
2000	2000 mm
3000	3000 mm
4000	4000 mm
5000	5000 mm

(12) Extra codes (TZ)

000	Without extra code	
702	Gold-plated snap-action switch for currents from 10 to 100 mA and DC 6 to 30 V / AC 6 to 120 V	(only with basic type extension 608301/10)
840	With integrated Pt100	(only with basic type extension 608301/30, up to max. AC 48 V)
841	With integrated Pt1000	(only with basic type extension 608301/30, up to max. AC 48 V)

Other versions (switching temperatures, fittings, etc.) available upon request.

Possible combinations

Basic type extension 608301/..(2)-...-..-..-..(6)	Diameter PC (8)	Thread type PC (9)	Insertion length (10)		Nominal voltage
608301/10-...-..-..-01	11.5 mm	G 1/2 A	28 mm	27	50 AC 0 to 48 V
	10 mm	M 14 x 1.5	35 mm	24	
608301/10-...-..-..-61	11.5 mm	G 1/2 A	28 mm	27*	51 AC 0 to 230 V
	10 mm	M 14 x 1.5	35 mm		
608301/10-...-..-..-11	11.5 mm	G 1/2 A	28 mm	27	50 AC 0 to 48 V
				27*	51 AC 0 to 230 V
	10 mm	M 14 x 1.5	35 mm	22	50 AC 0 to 48 V
				27*	51 AC 0 to 230 V
608301/20-...-..-..-61	10 mm	G 1/2 A	35 mm	27	52 AC 0 to 30 V
		M 14 x 1.5			
608301/20-...-..-..-18	10 mm	G 1/2 A	35 mm	27	
		M 14 x 1.5	40 mm	19	
608301/30-...-..-..-61	11.5 mm	G 1/2 A	35 mm	27*	51 AC 0 to 230 V
		M 14 x 1.5	28 mm		
608301/30-...-..-..-18	11.5 mm	G 1/2 A	35 mm	27	50 AC 0 to 48 V
		M 14 x 1.5	28 mm	19	
608301/30-...-..-..-36	11.5 mm	G 1/2 A	35 mm	27	50 AC 0 to 48 V
		M 14 x 1.5	28 mm	19	

* With protection conductor

	(1)		(2)		(3)		(4)		(5)		(6)		(7)		(8)		(9)		(10)		(11)		(12)
Order code	608301	/	. .	-	. . .	-	. .	-	. .	-	. .	-	. .	-	. .	-	. . .	-	. .	-	. . . .	/	
Order example	608301	/	10	-	140	-	98	-	50	-	01	-	50	-	10	-	121	-	35	-	0	/	000*

* List extra codes in sequence, separated by commas.

JUMO GmbH & Co. KG
Delivery address: Mackenrodtstraße 14
36039 Fulda, Germany
Postal address: 36035 Fulda, Germany
Phone: +49 661 6003-0
Fax: +49 661 6003-607
E-mail: mail@jumo.net
Internet: www.jumo.net

JUMO Instrument Co. Ltd.
JUMO House
Temple Bank, Riverway
Harlow, Essex CM20 2DY, UK
Phone: +44 1279 635533
Fax: +44 1279 635262
E-mail: sales@jumo.co.uk
Internet: www.jumo.co.uk

JUMO Process Control, Inc.
6733 Myers Road
East Syracuse, NY 13057, USA
Phone: 315-437-5866
1-800-554-5866
Fax: 315-437-5860
E-mail: info.us@jumo.net
Internet: www.jumousa.com

Contact Dial Thermometers

Type 608425

Type 608425/2316

Special features

- Class 1
- Display ranges from -40°C to +600°C
- Temperature controller with actual value display as built-in or add-on device in the stainless steel case with a bayonet connection
- Case sizes: Ø 100 mm and Ø 160 mm, front panel 96 x 96 mm
- Protection type IP 65

Brief description

Contact dial thermometers are devices with an actual value display for temperature measurement, control, and monitoring and can be used universally.

The temperature-dependent volume change in a measuring system filled with liquid or the temperature-dependent pressure change in a measuring system filled with gas is converted to a rotational movement of the actual value indicator by a bourdon tube; no transmission gear is required. The switching output is actuated by the rotational movement of the indicator shaft.

The overall system is extremely warp resistant due to the direct connection of the indicator to the measuring system. Oscillations are transferred to the indicator only to a limited degree.

The switching output can be designed as a slow-action contact, a magnetic snap contact, or an inductive contact. The slow-action or magnetic snap contact is an auxiliary current switch, which opens or closes an electrical circuit using a contact arm that is moved with the actual value indicator, depending on the direction of movement with the set limit values.

The inductive contact is an electronic limit contact with a contact-free displacement transducer (proximity switch).

Type 608425/2496

Technical data

	Round built-in and add-on case	Square built-in device
Case	Stainless steel case with bayonet connection (1.4301)	Zinc-plated sheet steel case, case fastening at rear with bar; front panel made of stainless steel (1.4301)
Protection type	IP 65 according to DIN EN 60529	On the front: IP 51 according to DIN EN 60529 On the rear: IP 00 according to DIN EN 60529
Electrical connection	Junction box: conductor cross-section up to 2.5 mm^2 Cable fitting, suitable for cable Ø from 6.5 to 13 mm	Screw terminals: conductor cross-section up to 2.5 mm^2
Front pane	Polycarbonate	Acrylic glass (PMMA)
Scale	White, with black lettering	
Display	Class 1 according to DIN EN 13190	
Strain relief spring	For capillary devices on the case and the temperature probe	
Setpoint value adjustment	By setpoint adjuster in the front pane	
Display correction	On the rear, no display correction with design type 01 and design type 20 (Ø 100 mm)	
Limit value temperatures	For transport and storage -20°C to +70°C (for display range 0 to +60°C up to max. 65°C)	
Rated position (NL)	Any	

	Liquid filling	Gas filling
Measuring system	Display range (AB) ≤ 350°C	Display range (AB) ≥ 400°C
Time constant $t_{0.632}$	Approx. 12 s, measured in water, with a probe Ø of 6 mm made of copper	Approx. 4 s, measured in oil, with a probe Ø of 10 mm made of stainless steel
Influential effect of the ambient temperature	In % of the display range (referring to the deviation from the reference value +23°C)	
On case	0.15% of the display range per K ambient temperature change	0.05% of the display range per K ambient temperature change
On capillary (per m)	0.03% of the display range per K ambient temperature change	No influence
	Higher ambient temperature – higher temperature display – lower switching point	

JUMO GmbH & Co. KG
Delivery address: Mackenrodtstraße 14
36039 Fulda, Germany
Postal address: 36035 Fulda, Germany
Phone: +49 661 6003-0
Fax: +49 661 6003-607
E-mail: mail@jumo.net
Internet: www.jumo.net

JUMO Instrument Co. Ltd.
JUMO House
Temple Bank, Riverway
Harlow, Essex CM20 2DY, UK
Phone: +44 1279 635533
Fax: +44 1279 635262
E-mail: sales@jumo.co.uk
Internet: www.jumo.co.uk

JUMO Process Control, Inc.
6733 Myers Road
East Syracuse, NY 13057, USA
Phone: 315-437-5866
1-800-554-5866
Fax: 315-437-5860
E-mail: info.us@jumo.net
Internet: www.jumousa.com

	Standard	Extra code (TZ) 442
Electrical contact		
Contact type	Electromechanical slow-action contact with single-pole touch-dependent N/O contacts	Electromechanical slow-action contact with single-pole touch-dependent N/O contacts
Switching capacity	AC / DC 230 V, +10/-15%, 48 to 63 Hz, cos φ = 1 (0.6)	
	max. 18 VA / 10 W	max. 50 VA / 30 W
Switching differential	≤ 0.5% of the display range	approx. 2% of the display range
Switching point accuracy	± 0.5% of the display range referring to the switch-off point with rising temperature	
Switching reliability	To ensure a high switching reliability, we recommend a minimum voltage of: 24 V and a minimum current of 20 mA	

	Electromechanical limit contact	Inductive limit contact
Switching output	01 to 11	30 and 31 The inductive limit contact operates contact-free (proximity switch). The coil body (initiator) is fitted to the setpoint value indicator. The control lug is moved by the actual value indicator. If the control lug moves into the air gap in the coil body, the internal resistance increases (active surface attenuated, initiator has high resistance – relay drops). The resulting change in the current strength is the input signal for the switching amplifier of the control unit. Mode of operation with switching behavior according to the "open circuit principle". Control lug not in the air gap in the coil body, relay engages: Current consumption ≥ 3 mA (active surface free, oscillator oscillates). Control lug in the air gap in the coil body, relay drops: Current consumption ≤ 1 mA (active surface attenuated, oscillator off). Inductive limit contact according to Directive 94/9 EC (ATEX), suitable for II 2 G EEx ia IIC T6
	For switching sequence and circuit diagrams, see order details	
Safety relays	In the case of electromechanical limit contacts, we recommend the use of multifunctional relays in the MSR (measurement and control technology) series from: Wiebrock Mess- und Regeltechnik GmbH, www.wiebrock.de. These switching amplifiers improve the switching reliability and the switching capacity of slow-action and magnetic snap contacts and reduce their contact load. Unintentional switching operations in the limit contacts, caused by vibrations, are reduced considerably by an OFF delay. In the case of inductive limit contacts, transistor relays, type KFA6-SR2-Ex up to W (II (1) G D [EEx ia] IIC) from Pepperl & Fuchs, www.pepperlfuchs.de, can be used. The intrinsic safety II 2 G EEx ia IIC T6 is guaranteed only in connection with the above-mentioned transistor relay.	

Display range (AB)	Display range in °C	Measuring range in °C	Tolerance in K (+/-)
643	-20 to +120	0 to +100	2.0
357	-50 to +50	-40 to +40	1.0
810	0 to +80	+10 to +70	1.0
814	0 to +100	+10 to +90	1.0
818	0 to +120	+20 to +100	1.0
826	0 to +160	+20 to +140	2.0
832	0 to +200	+20 to +180	2.0
834	0 to +250	+30 to +220	2.5
840	0 to +300	+30 to +270	5.0
854	0 to +500	+50 to +450	5.0

JUMO GmbH & Co. KG
Delivery address: Mackenrodtstraße 14
36039 Fulda, Germany
Postal address: 36035 Fulda, Germany
Phone: +49 661 6003-0
Fax: +49 661 6003-607
E-mail: mail@jumo.net
Internet: www.jumo.net

JUMO Instrument Co. Ltd.
JUMO House
Temple Bank, Riverway
Harlow, Essex CM20 2DY, UK
Phone: +44 1279 635533
Fax: +44 1279 635262
E-mail: sales@jumo.co.uk
Internet: www.jumo.co.uk

JUMO Process Control, Inc.
6733 Myers Road
East Syracuse, NY 13057, USA
Phone: 315-437-5866
1-800-554-5866
Fax: 315-437-5860
E-mail: info.us@jumo.net
Internet: www.jumousa.com

Dimensions

Types: 608425/0110
608425/0116

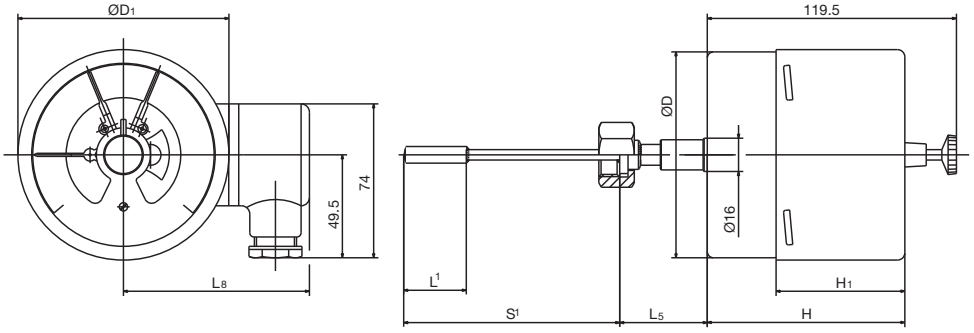

Types: 608425/1010
608425/1016

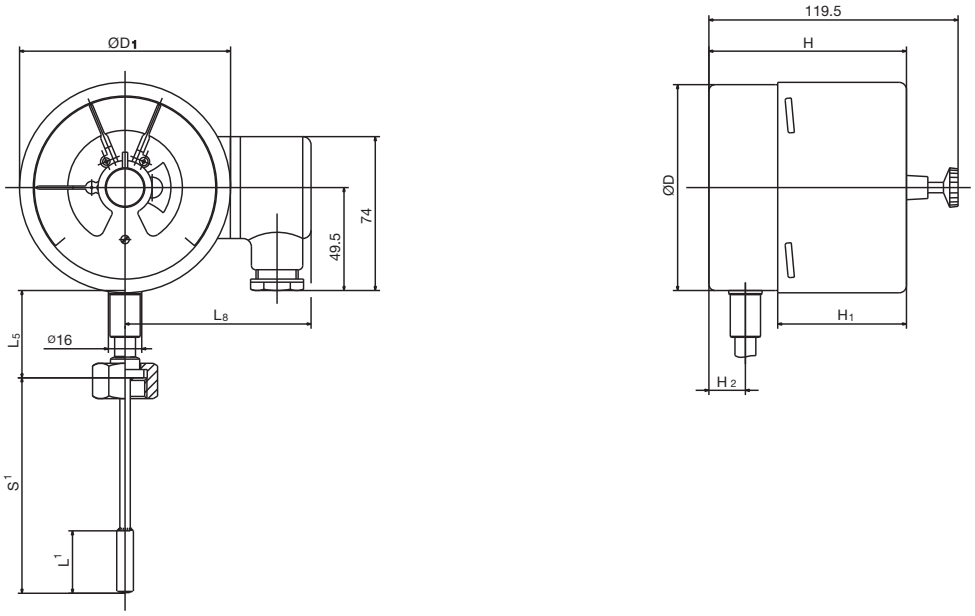

Types: 608425/2010
608425/2016

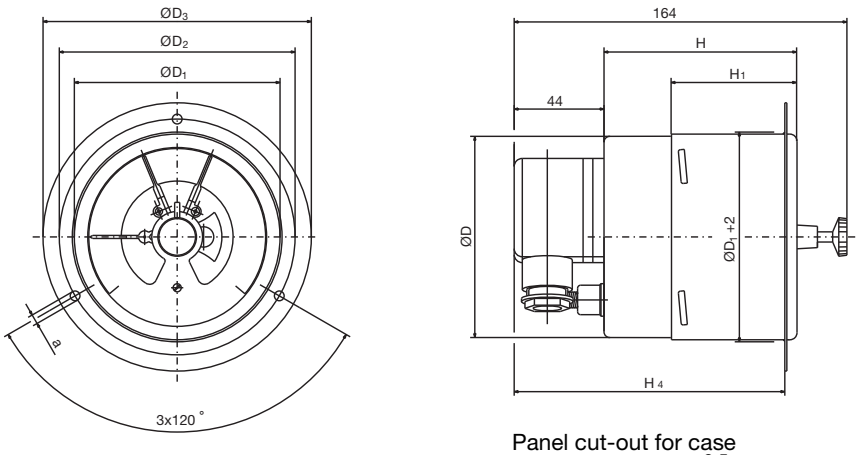

Panel cut-out for case
ø 100 mm = $105.5^{+0.5}$ mm
ø 160 mm = $165.5^{+0.5}$ mm

[1] For length specifications, see data sheet 608730

JUMO GmbH & Co. KG
Delivery address: Mackenrodtstraße 14
36039 Fulda, Germany
Postal address: 36035 Fulda, Germany
Phone: +49 661 6003-0
Fax: +49 661 6003-607
E-mail: mail@jumo.net
Internet: www.jumo.net

JUMO Instrument Co. Ltd.
JUMO House
Temple Bank, Riverway
Harlow, Essex CM20 2DY, UK
Phone: +44 1279 635533
Fax: +44 1279 635262
E-mail: sales@jumo.co.uk
Internet: www.jumo.co.uk

JUMO Process Control, Inc.
6733 Myers Road
East Syracuse, NY 13057, USA
Phone: 315-437-5866
1-800-554-5866
Fax: 315-437-5860
E-mail: info.us@jumo.net
Internet: www.jumousa.com

Types: 608425/2210
608425/2216

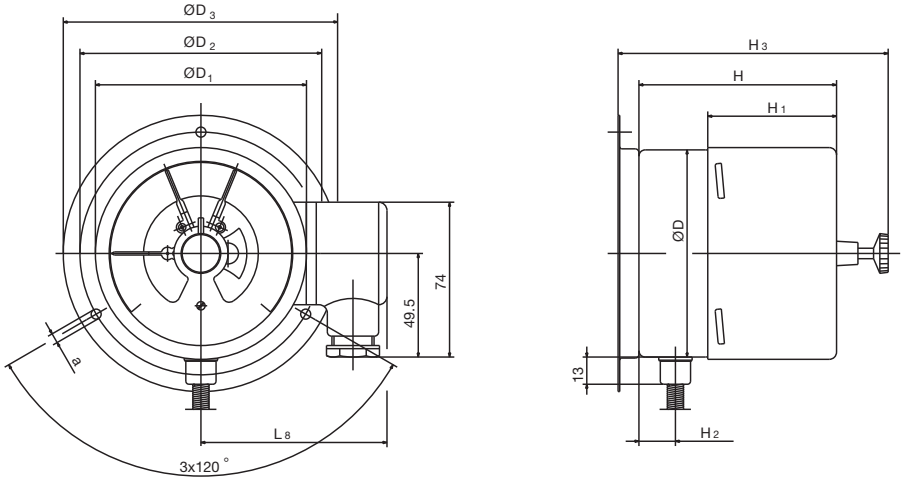

Types: 608425/2310
608425/2316

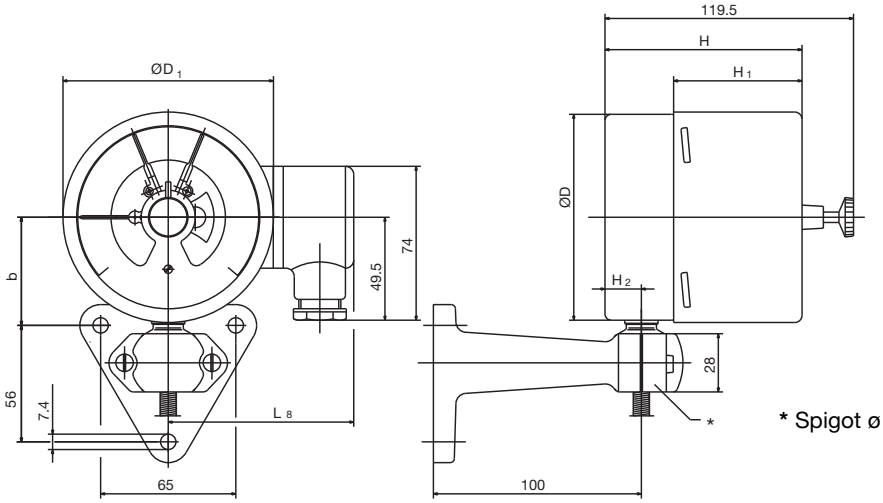

* Spigot ø 26mm

Bracket for measuring device according to DIN 16281

Case Ø	H	H_1	H_2	H_3	H_4	D	D_1	D_2	D_3	a	b	L_5	L_8
100	95	62	17.5	129.5	129	99	101.5	116	132	4.8	52	40[1]	90
160	96	63		121	130	159	161.5	178	196	5.8	82		120

[1] With protection tube connection type TA 02, L_5 is ≤ 69 mm

Type: 608425/2496

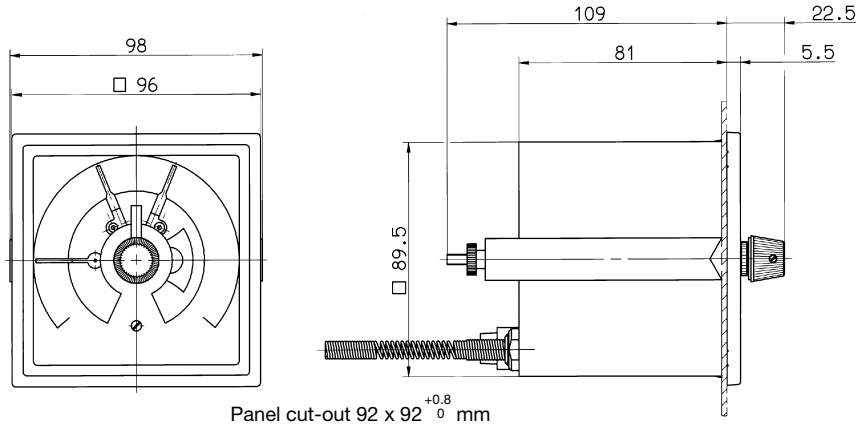

Panel cut-out 92 x 92 $^{+0.8}_{0}$ mm

JUMO GmbH & Co. KG
Delivery address: Mackenrodtstraße 14
36039 Fulda, Germany
Postal address: 36035 Fulda, Germany
Phone: +49 661 6003-0
Fax: +49 661 6003-607
E-mail: mail@jumo.net
Internet: www.jumo.net

JUMO Instrument Co. Ltd.
JUMO House
Temple Bank, Riverway
Harlow, Essex CM20 2DY, UK
Phone: +44 1279 635533
Fax: +44 1279 635262
E-mail: sales@jumo.co.uk
Internet: www.jumo.co.uk

JUMO Process Control, Inc.
6733 Myers Road
East Syracuse, NY 13057, USA
Phone: 315-437-5866
1-800-554-5866
Fax: 315-437-5860
E-mail: info.us@jumo.net
Internet: www.jumousa.com

Order details

Contact dial thermometer class 1, type 608425

		Order code	(1)	Basic type
		608425		Mechanical contact dial thermometer class 1 (round built-in and add-on device)
		608425		Mechanical contact dial thermometer class 1 (square built-in device)
			(2)	**Basic type extension**
X		0110		Design type: 01; case size: ø 100 mm
X		0116		Design type: 01; case size: ø 160 mm
X		1010		Design type: 10; case size: ø 100 mm
X		1016		Design type: 10; case size: ø 160 mm
X		2010		Design type: 20; case size: ø 100 mm
X		2016		Design type: 20; case size: ø 160 mm
X		2210		Design type: 22; case size: ø 100 mm
X		2216		Design type: 22; case size: ø 160 mm
X		2310		Design type: 23; case size: ø 100 mm
X		2316		Design type: 23; case size: ø 160 mm
	X	2496		Design type: 24; case size: 96 x 96 mm
			(3)	**Display range (AB)**
X	X	469		-40 to +40°C;
X	X	566		-30 to +50°C;
X	X	807		0 to +60°C;
X	X	810		0 to +80°C;
X	X	814		0 to +100°C;
X	X	818		0 to +120°C;
X	X	826		0 to +160°C;
X	X	832		0 to +200°C;
X	X	834		0 to +250°C;
X	X	840		0 to +300°C;
X	X	843		0 to +350°C;
X	X	848		0 to +400°C;
X	X	854		0 to +500°C;
			(4)	**Capillary type (FL)[1]**
X		00		Without (with rigid shaft)
X	X	04		FL04Stainless steel capillary (1.4571), ø 2.2 mm
			(5)	**Capillary length[1]**
X		0		Without (with rigid connection)
X	X	1000		1000 mm
X	X	2000		2000 mm
X	X	3000		3000 mm
X	X	4000		4000 mm
X	X	5000		5000 mm
X	X	. . . .		Special length (specifications in plain text: 1,000 mm increments, maximum length 10,000 mm)
			(6)	**Process connection (PC)[1]**
X	X	750		TF01 Temperature probe with stepped support tube
X	X	753		TF05 Temperature probe with plane support tube
X	X	752		TF11 Temperature probe without support tube
X	X	843		TA02 Protection tube with union nut and loose screw connection [2]
X	X	161		TA03 Protection tube with loose union nut (with TF01)
X	X	846		TA04 Protection tube with fixed hexagon male connector [2]
X	X	847		TA06 Displaceable threaded fitting on support tube [2]
X	X	891		SH05 Screw-in sleeve, multi-sectional[2] (only with ø 14 mm)
X	X	913		SH07 Screw-in sleeve, multi-sectional, with clamping piece and fixing screw[2]

JUMO GmbH & Co. KG
Delivery address: Mackenrodtstraße 14
36039 Fulda, Germany
Postal address: 36035 Fulda, Germany
Phone: +49 661 6003-0
Fax: +49 661 6003-607
E-mail: mail@jumo.net
Internet: www.jumo.net

JUMO Instrument Co. Ltd.
JUMO House
Temple Bank, Riverway
Harlow, Essex CM20 2DY, UK
Phone: +44 1279 635533
Fax: +44 1279 635262
E-mail: sales@jumo.co.uk
Internet: www.jumo.co.uk

JUMO Process Control, Inc.
6733 Myers Road
East Syracuse, NY 13057, USA
Phone: 315-437-5866
1-800-554-5866
Fax: 315-437-5860
E-mail: info.us@jumo.net
Internet: www.jumousa.com

Order details

Contact dial thermometer class 1, type 608425

			(7)	**Diameter of process connection (PC)[1]**
X	X	6		ø 6 mm
X	X	8		ø 8 mm
X	X	10		ø 10 mm
X	X	14		ø 14 mm (only for SH05)
			(8)	**Thread type of process connection (PC)[1]**
X	X	000		Without thread (for TF 01, TF 05, and TF 11)
X	X	103		Screw connection G 3/8
X	X	104		Screw connection G 1/2
X	X	105		Screw connection G 3/4
			(9)	**Material of process connection (PC)[1]**
X	X	26		Stainless steel (CrNi, 1.4571)
X	X	97		Stainless steel (CrNi, 14571) – TF / Brass (CuZn) – TA, SH
			(10)	**Insertion length, process connection (PC)[1] (dimension "EL" or "S")**
X	X	0		Minimum insertion length TF 11 (active probe dimension)
X	X	50		50 mm
X	X	100		100 mm
X	X	150		150 mm
X	X	200		200 mm
X	X	. . .		Special length (specifications in plain text – 50 mm increments)
			(11)	**Switching output (SA)**
X	X	01		With increasing temperature, contact 1 (N/C) opens (2)[3]
X	X	02		With increasing temperature, contact 1 (N/O) closes (1)[3]
X	X	03		With increasing temperature, contact 1 (N/C) opens and contact 2 (N/O) closes (21)[3]
X	X	04		With increasing temperature, contact 1 and contact 2 (N/O) closes (11)[3]
X	X	05		With increasing temperature, contact 1 and contact 2 (N/C) opens (22)[3]
X		10		With increasing temperature, contact 1 (N/C) opens and contact 2 (N/ closes (with isolated electrical circuit) (21)[3]
X		11		With increasing temperature, contact 1 and contact 2 (N/O) closes (with isolated electrical circuit) (11)[3]
X	X	30		Control lug moving in when the temperature rises, N/C (2)[3]
X	X	31		Control lug moving out when the temperature rises, N/O contact (1)[3]
			(12)	**Extra codes (TZ)**
X	X	000		Without extra code
X	X	442		Electromechanical magnetic snap contact
X		509		Setpoint value adjustment with key
X	X	522		Customized scale

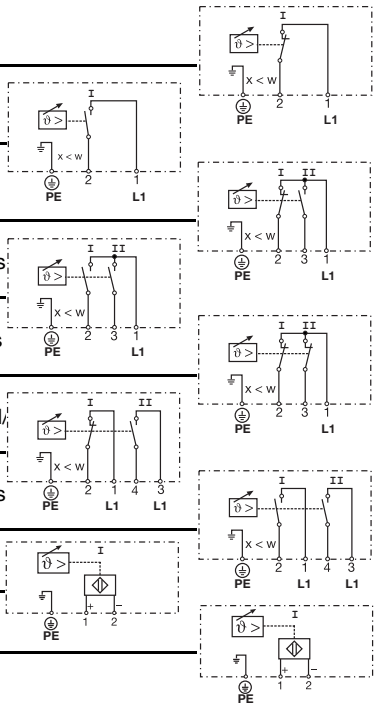

Special versions upon request!

	(1)		(2)		(3)		(4)		(5)		(6)		(7)		(8)		(9)		(10)		(11)		(12)	
Order code	608425	/	. . . .	-	. . .	-	. .	-	. . . .	-	. . .	-	. .	-	. . .	-	. .	-	. . .	-	. . .	/	. . .	, . . .
Order example	608425	/	2010	-	818	-	04	-	2000	-	750	-	8	-	000	-	26	-	100	-	01	/	000[4]	

[1] For description and special features refer to data sheet 608730
[2] Screw-in spigot according to DIN 3852 form A
[3] Bracketed values (. .) correspond to the key indicator specifications according to DIN 16196
[4] List extra codes in sequence, separated by commas

JUMO GmbH & Co. KG
Delivery address: Mackenrodtstraße 14
36039 Fulda, Germany
Postal address: 36035 Fulda, Germany
Phone: +49 661 6003-0
Fax: +49 661 6003-607
E-mail: mail@jumo.net
Internet: www.jumo.net

JUMO Instrument Co. Ltd.
JUMO House
Temple Bank, Riverway
Harlow, Essex CM20 2DY, UK
Phone: +44 1279 635533
Fax: +44 1279 635262
E-mail: sales@jumo.co.uk
Internet: www.jumo.co.uk

JUMO Process Control, Inc.
6733 Myers Road
East Syracuse, NY 13057, USA
Phone: 315-437-5866
1-800-554-5866
Fax: 315-437-5860
E-mail: info.us@jumo.net
Internet: www.jumousa.com

MICROSTAT-M

Type 608501

Special features

- Class 2
- Display ranges from -40°C to +600°C
- Temperature controller with actual value display as built-in device in a plastic case
- With a microswitch
- Case sizes: Ø 60 mm and Ø 80 mm
  front panel: 72 x 72 mm and 96 x 96 mm

Type 608501/2160

Brief description

The MICROSTAT-M is a universally applicable electromechanical temperature controller with actual value display. The device comes in a plastic case with a liquid- or gas-filled measuring system.
The temperature-dependent volume change in a measuring system filled with liquid or the temperature-dependent pressure change in a measuring system filled with gas is converted to a rotational movement of the actual value indicator by a bourdon tube; no transmission gear is required. The microswitch is actuated by the rotational movement of the indicator shaft via a tap system.

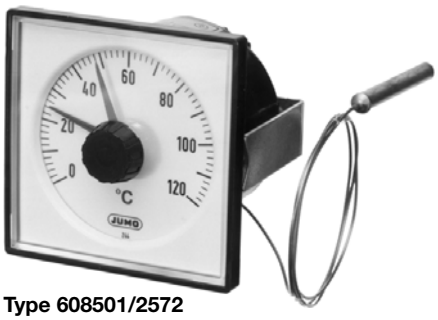

Type 608501/2572

JUMO GmbH & Co. KG
Delivery address: Mackenrodtstraße 14
36039 Fulda, Germany
Postal address: 36035 Fulda, Germany
Phone: +49 661 6003-0
Fax: +49 661 6003-607
E-mail: mail@jumo.net
Internet: www.jumo.net

JUMO Instrument Co. Ltd.
JUMO House
Temple Bank, Riverway
Harlow, Essex CM20 2DY, UK
Phone: +44 1279 635533
Fax: +44 1279 635262
E-mail: sales@jumo.co.uk
Internet: www.jumo.co.uk

JUMO Process Control, Inc.
6733 Myers Road
East Syracuse, NY 13057, USA
Phone: 315-437-5866
1-800-554-5866
Fax: 315-437-5860
E-mail: info.us@jumo.net
Internet: www.jumousa.com

Technical data

Case and/or front panel	Plastic, black; sheet steel case (extra code 415)	
Protection type	On the front: IP 53 according to DIN EN 60529 On the rear: IP 00 according to DIN EN 60529 (IP 54 with extra code 426)	
Scale	White, with black lettering	
Display	Class 2 according to DIN EN 13190	
Measuring system	**Liquid filling**	**Gas filling**
	AB ≤ 350 °C	AB ≥ 400 °C
Time constant $t_{0.632}$	Approx. 12 s, measured in water, with a probe Ø of 6 mm made of Cu.	Approx. 4 s, measured in oil, with a probe Ø of 10 mm made of stainless steel.
Influential effect of the ambient temperature	In % of the display range (referring to the deviation from the reference value +23°C)	
On case	0.15% of the display range per K ambient temperature change	0.05% of the display range per K ambient temperature change
On capillary (per m)	0.03% of the display range per K ambient temperature change	No influence
	At higher ambient temperature – higher temperature display – lower switching point	

	Standard	Extra code (TZ) 651	Extra code (TZ) 650
Electrical contact **Contact type**	Single-pole microswitch with mechanically actuated changeover contact		
Switching capacity	AC 230 V, +10/-15%, 48 to 63 Hz, cos φ = 1 (0.6)		
	5 (1.5) A	3 (1) A	10 (3) A
Switching differential	Approx. 2% of the display range		2 to 4% of the display range
Switching point accuracy	± 0.5% of the display range referring to the switch-off point with rising temperature		
Switching reliability	To ensure a high switching reliability, we recommend a minimum voltage of 24 V and a minimum current of 100 mA.		

	Standard	Extra code (TZ) 507
Electrical connection	Tab connector A 6.3x0.8 according to DIN 46244	Screw terminals: conductor cross-section up to 1.5 mm^2
Setpoint value adjustment	By setpoint adjuster in the front pane	
Limit value temperatures	For transport and storage: -20°C to +70°C (for display range -40 to +40°C up to max. 50°C; for display range -30 to +50°C up to max. 60°C)	
Rated position	Any	

Display range (AB)	Display range in °C	Measuring range in °C	Tolerance in K (+/-)
469	-40 to + 40	-40 to + 40	2.0
566	-30 to + 50	-30 to + 50	2.0
643	-20 to +120	-20 to +120	4.0
807	0 to + 60	0 to + 60	2.0
810	0 to + 80	0 to + 80	2.0
814	0 to +100	0 to +100	2.0
818	0 to +120	0 to +120	4.0
826	0 to +160	0 to +160	4.0
832	0 to +200	0 to +200	4.0
834	0 to +250	0 to +250	5.0
926	+50 to +250	+50 to +250	4.0
840	0 to +300	0 to +300	10.0
927	+50 to +300	+50 to +300	5.0
843	0 to +350	0 to +350	10.0
932	+50 to +350	+50 to +350	10.0
848	0 to +400	0 to +400	10.0
851	0 to +450	0 to +450	10.0
854	0 to +500	0 to +500	10.0
858	0 to +600	0 to +600	15.0

JUMO GmbH & Co. KG
Delivery address: Mackenrodtstraße 14
36039 Fulda, Germany
Postal address: 36035 Fulda, Germany
Phone: +49 661 6003-0
Fax: +49 661 6003-607
E-mail: mail@jumo.net
Internet: www.jumo.net

JUMO Instrument Co. Ltd.
JUMO House
Temple Bank, Riverway
Harlow, Essex CM20 2DY, UK
Phone: +44 1279 635533
Fax: +44 1279 635262
E-mail: sales@jumo.co.uk
Internet: www.jumo.co.uk

JUMO Process Control, Inc.
6733 Myers Road
East Syracuse, NY 13057, USA
Phone: 315-437-5866
1-800-554-5866
Fax: 315-437-5860
E-mail: info.us@jumo.net
Internet: www.jumousa.com

Dimensions

Types: 608501/2160
608501/2160 TZ 415

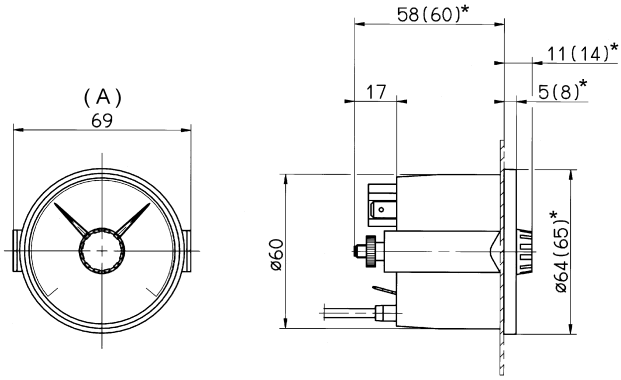

Panel cut-out Ø 62 $^{+0.5}_{0}$ mm

* With sheet steel case (extra code TZ 415)

(A) Fastening bar width

Types: 608501/2572

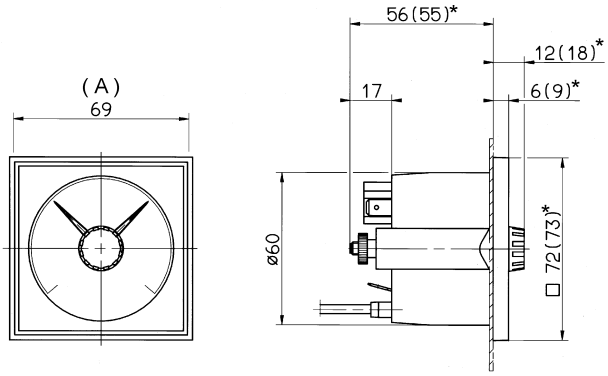

Panel cut-out Ø 62 $^{+0.5}_{0}$ mm

(A) Fastening bar width

Types: 608501/2180
608501/2180 TZ 415

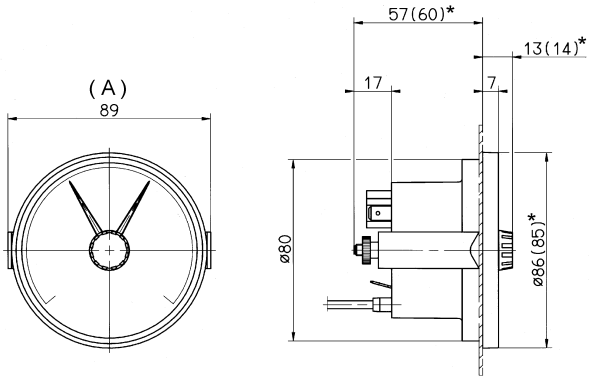

Panel cut-out Ø 82 $^{+0.5}_{0}$ mm

* With sheet steel case (extra code TZ 415)

(A) Fastening bar width

Types: 608501/2596
608501/2596 TZ 415

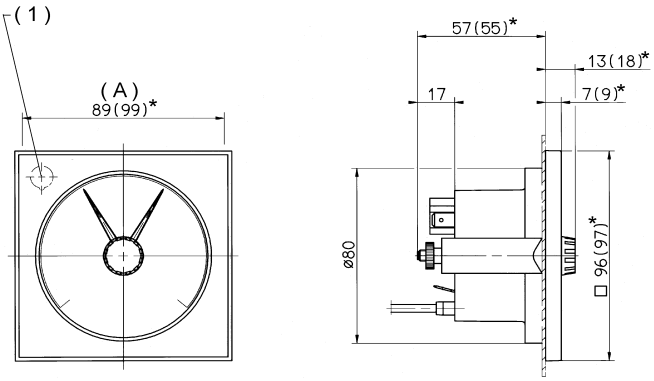

Panel cut-out Ø 82 $^{+0.5}_{0}$ mm or 92 x 92 $^{+0.8}_{0}$ mm (TZ 460)

* With sheet steel case (extra code TZ 415)

(1) TZ 572 (control lamp) only with panel cut-out 92 x 92$^{+0.8}_{0}$ mm

(A) Fastening bar width

JUMO GmbH & Co. KG
Delivery address: Mackenrodtstraße 14
36039 Fulda, Germany
Postal address: 36035 Fulda, Germany
Phone: +49 661 6003-0
Fax: +49 661 6003-607
E-mail: mail@jumo.net
Internet: www.jumo.net

JUMO Instrument Co. Ltd.
JUMO House
Temple Bank, Riverway
Harlow, Essex CM20 2DY, UK
Phone: +44 1279 635533
Fax: +44 1279 635262
E-mail: sales@jumo.co.uk
Internet: www.jumo.co.uk

JUMO Process Control, Inc.
6733 Myers Road
East Syracuse, NY 13057, USA
Phone: 315-437-5866
1-800-554-5866
Fax: 315-437-5860
E-mail: info.us@jumo.net
Internet: www.jumousa.com

Dimensions

Types: 608501/2060
608501/2060 TZ 415
608501/2080 TZ 415

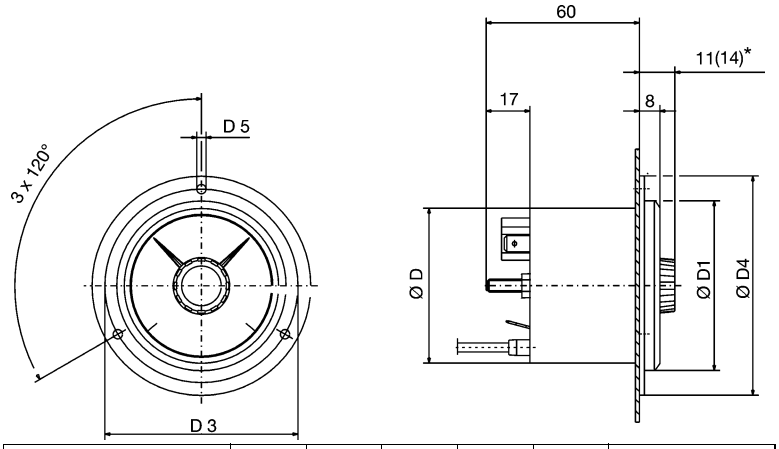

* With sheet steel case (extra code TZ 415)

Type	Ø D	Ø D1	Ø D3	Ø D4	Ø D5	Panel cut-out
	(mm)					Ø $^{+0.5}_{0}$ mm
608501/2060 608501/2060 TZ 415	60	66	75	85	3.6	62
608501/2080 TZ 415	80	86	95	110	4.8	82

Extra code 426

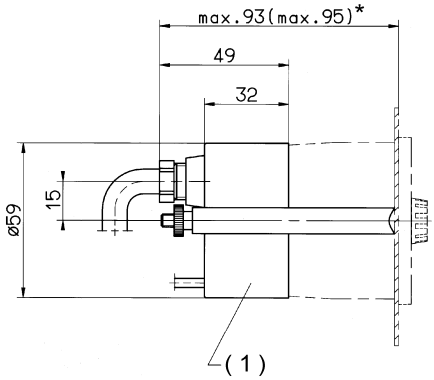

* With sheet steel case (extra code TZ 415)

(1) Extra code TZ 426

JUMO GmbH & Co. KG
Delivery address: Mackenrodtstraße 14
36039 Fulda, Germany
Postal address: 36035 Fulda, Germany
Phone: +49 661 6003-0
Fax: +49 661 6003-607
E-mail: mail@jumo.net
Internet: www.jumo.net

JUMO Instrument Co. Ltd.
JUMO House
Temple Bank, Riverway
Harlow, Essex CM20 2DY, UK
Phone: +44 1279 635533
Fax: +44 1279 635262
E-mail: sales@jumo.co.uk
Internet: www.jumo.co.uk

JUMO Process Control, Inc.
6733 Myers Road
East Syracuse, NY 13057, USA
Phone: 315-437-5866
1-800-554-5866
Fax: 315-437-5860
E-mail: info.us@jumo.net
Internet: www.jumousa.com

Order details

MICROSTAT-M Type 608501

Order code	(1)	Basic type
		Mechanical temperature controller MICROSTAT-M class 2 with a microswitch
608501/2060		Design type: 20; case size: ø 60 mm
608501/2080		Design type: 20; case size: ø 80 mm (only with TZ 415)
608501/2160		Design type: 21; case size: ø 60 mm
608501/2180		Design type: 21; case size: ø 80 mm
608501/2572		Design type: 25; case size: 72 x 72 mm
608501/2596		Design type: 25; case size: 96 x 96 mm

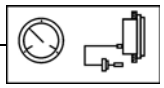

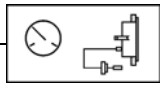

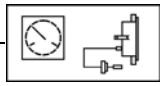

	(2)	Display range (AB)
		Display range °C
469		-40 to + 40
566		-30 to + 50
643		-20 to +120
807		0 to + 60
810		0 to + 80
814		0 to +100
818		0 to +120
826		0 to +160
832		0 to +200
834		0 to +250
926		+50 to +250
840		0 to +300
927		+50 to +300
843		0 to +350
932		+50 to +350
848		0 to +400
851		0 to +450
854		0 to +500
858		0 to +600

	(3)	Capillary type (FL)[1]
02		FL 02 Cu capillary with Cu textile braiding, approx. Ø 2.5 mm (up to AB end value +300°C)
11		FL11 Cu capillary with PE coating, approx. ø 3.5 mm (up to AB end value +120°C)
17		FL 17 Stainless steel capillary, Ø 1.5 mm
21		FL21 Cu capillary, Ø 1.0 mm (up to AB end value +300°C)

	(4)	Capillary length[1]
1000		1000 mm
2000		2000 mm
3000		3000 mm
4000		4000 mm
5000		5000 mm
. . . .		Special length (specifications in plain text: 1,000 mm increments, maximum length 10,000 mm)

JUMO GmbH & Co. KG
Delivery address: Mackenrodtstraße 14
36039 Fulda, Germany
Postal address: 36035 Fulda, Germany
Phone: +49 661 6003-0
Fax: +49 661 6003-607
E-mail: mail@jumo.net
Internet: www.jumo.net

JUMO Instrument Co. Ltd.
JUMO House
Temple Bank, Riverway
Harlow, Essex CM20 2DY, UK
Phone: +44 1279 635533
Fax: +44 1279 635262
E-mail: sales@jumo.co.uk
Internet: www.jumo.co.uk

JUMO Process Control, Inc.
6733 Myers Road
East Syracuse, NY 13057, USA
Phone: 315-437-5866
1-800-554-5866
Fax: 315-437-5860
E-mail: info.us@jumo.net
Internet: www.jumousa.com

Order details

MICROSTAT-M Type 608501

Order code	(5)	Process connection (PC)[1]	
750		TF 01; Temperature probe with stepped support tube	
752		TF 11; Temperature probe without support tube	
843		TA 02; Protection tube with union nut and loose screw connection[2]	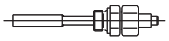
161		TA 03; Protection tube with loose union nut	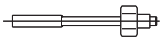
847		TA 06; Displaceable threaded fitting on support tube[2]	
311		TA 20; Protection tube with loose screw connection and connection collar[2]	
872		TA 21; Protection tube with loose pressure screw and conical seal	
873		TA 22; Protection tube with loose pressure screw, conical seal and loose screw connection[2]	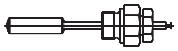
401		TA 23; Protection tube with pressure screw and contact pressure spring	
913		SH 07; Screw-in sleeve, multi-sectional, with clamping piece and fixing screw[2]	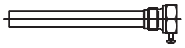
820		SH 09; Weld-in sleeve, multi-sectional, with clamping piece and fixing screw (not with FL21 – weld collar with steel 1.4515)	
876		SH 10; Screw-in sleeve, multi-sectional[2]	
871		SH 11; Screw-in sleeve, multi-sectional[2]	

	(6)	Diameter of process connection (PC)[1]
6		Ø 6 mm
8		Ø 8 mm
10		Ø 10 mm
11		Ø 11 mm
12		Ø 12 mm

	(7)	Thread type of process connection (PC)[1]
000		Without thread (for TF 01 and TF 11)
103		Screw connection $G^3/_8$
104		Screw connection $G^1/_2$
105		Screw connection $G^3/_4$
114		Screw connection M 10 × 1 (only for TA 23 and SH 11)

	(8)	Material, probe / support tube[1]
26		Stainless steel (CrNi, 1.4571)
96		Copper (Cu) / brass (CuZn) (up to 200 °C)
95		Stainless steel (CrNi, 1.4571) – probe / brass (CuZn) – support tube (from 250 °C)

JUMO GmbH & Co. KG
Delivery address: Mackenrodtstraße 14
36039 Fulda, Germany
Postal address: 36035 Fulda, Germany
Phone: +49 661 6003-0
Fax: +49 661 6003-607
E-mail: mail@jumo.net
Internet: www.jumo.net

JUMO Instrument Co. Ltd.
JUMO House
Temple Bank, Riverway
Harlow, Essex CM20 2DY, UK
Phone: +44 1279 635533
Fax: +44 1279 635262
E-mail: sales@jumo.co.uk
Internet: www.jumo.co.uk

JUMO Process Control, Inc.
6733 Myers Road
East Syracuse, NY 13057, USA
Phone: 315-437-5866
1-800-554-5866
Fax: 315-437-5860
E-mail: info.us@jumo.net
Internet: www.jumousa.com

Order details

MICROSTAT-M Type 608501

Order code	(9)	Material of process connection (PC)[1]
00		Without (only TF 01 and TF 11)
26		Stainless steel (CrNi, 1.4571)
46		Brass (CuZn)

	(10)	Insertion length, process connection (PC)[1] (dimension "EL" or "S")
0		Minimum insertion length TF 11 (active probe dimension)
50		50 mm
100		100 mm
150		150 mm
200		200 mm
. . .		Special length (specifications in plain text – 50 mm increments)

	(11)	Switching output (SA)	
20	SA 20	One contact	

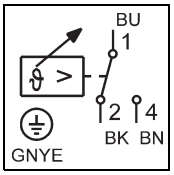

Standard connection diagram

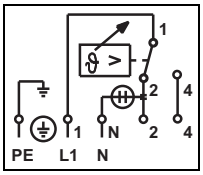

Connection diagram with control lamp (TZ 572)

	(12)	Extra codes (TZ)
000		Without extra code
315		Strain relief spring for capillary on case and probe (not with FL 21)
411		Bezel, front panel or flange ring made of metal (not with basic type extension 2080 and 2180)
415		Sheet steel case with metal bezel, front panel, or flange ring
426		Plastic cover cap to protect the tab connector or screw terminals against contact and spray water, IP 54, with cable fitting, suitable for cable Ø of 6-8 mm
460		Device centering for panel cut-out 68 x 68 mm and 92 × 92 mm (only for basic type extension 2572 and 2596)
477		Setpoint adjustment protected by the bolted cover. adjustment with tools (only with case size Ø 60 mm in the plastic case)
507		Electrical connection by screw terminals up to 1.5 mm^2 cable cross-section
510		Stop for Min. — or Max. — setpoint value limitation, factory set
520		Switching point is a permanent default setting
522		Customized scale
572		Control lamp (only with types: 608501/2572 TZ 460, 415 and 608501/2596 TZ 460, 415)
650		Microswitch 10 (3) A (AC/DC 230 V, +10/-15%, 48 to 63 Hz, cos φ = 1 (0.6)) (not with TZ 577)

Special versions upon request!

Order code

(1)		(2)		(3)		(4)		(5)		(6)		(7)		(8)		(9)		(10)		(11)		(12)	
608501/. . . .	-	. . .	-	. .	-	. . . .	-	. . .	-	. .	-	. . .	-	. .	-	. .	-	. . .	-	. .	/	. . .	, . . .

Order example

608501/2060	-	818	-	21	-	2000	-	750	-	8	-	000	-	96	-	00	-	100	-	20	/	000[3]

[1] For description and special features refer to data sheet 608730.
[2] Screw-in spigot according to DIN 3852 form A.
[3] List extra codes in sequence, separated by commas.

JUMO GmbH & Co. KG
Delivery address: Mackenrodtstraße 14
36039 Fulda, Germany
Postal address: 36035 Fulda, Germany
Phone: +49 661 6003-0
Fax: +49 661 6003-607
Email: mail@jumo.net
Internet: www.jumo.net

JUMO Instrument Co. Ltd.
JUMO House
Temple Bank, Riverway
Harlow, Essex, CM20 2DY, UK
Phone: +44 1279 63 55 33
Fax: +44 1279 62 50 29
Email: sales@jumo.co.uk
Internet: www.jumo.co.uk

JUMO Process Control, Inc.
6733 Myers Road
East Syracuse, NY 13057, USA
Phone: +1 315 437 5866
Fax: +1 315 437 5860
Email: info.us@jumo.net
Internet: www.jumousa.com

Contact Dial Thermometers

Special features

- Class 1.5
- Display range -40 to +600 °C
- Temperature controller with actual value display as built-in or add-on device in a stainless steel case
- With 1 or 2 miroswitches
- Case sizes Ø: 60 mm, 80 mm, and 100 mm
- Front panel: 72 mm × 72 mm and 96 mm × 96 mm

Type 608520/2380

Type 608550/1080

Brief description

Contact dial thermometers are devices with an actual value display for temperature measurement, control, and monitoring and can be used universally.

The temperature-dependent volume change in a measuring system filled with liquid or the temperature-dependent pressure change in a measuring system filled with gas is converted to a rotational movement of the actual value indicator by a bourdon tube; no transmission gear is required. The microswitch is actuated by the rotational movement of the indicator shaft via a tap system.

Contact dial thermometers in the series 608520/608550 are RoHS-compliant and cadmium-free.

JUMO GmbH & Co. KG
Delivery address: Mackenrodtstraße 14
36039 Fulda, Germany
Postal address: 36035 Fulda, Germany
Phone: +49 661 6003-0
Fax: +49 661 6003-607
Email: mail@jumo.net
Internet: www.jumo.net

JUMO Instrument Co. Ltd.
JUMO House
Temple Bank, Riverway
Harlow, Essex, CM20 2DY, UK
Phone: +44 1279 63 55 33
Fax: +44 1279 62 50 29
Email: sales@jumo.co.uk
Internet: www.jumo.co.uk

JUMO Process Control, Inc.
6733 Myers Road
East Syracuse, NY 13057, USA
Phone: +1 315 437 5866
Fax: +1 315 437 5860
Email: info.us@jumo.net
Internet: www.jumousa.com

Technical data

General Information

Case and front panel	Stainless steel (1.4301)
Cover cap	Plastic (PA6), gray, UV-stabilized
Protection type	IP54 according to DIN EN 60529
Front pane	Acrylic glass (PMMA)
Chassis	Aluminum (3.2582.05)
Scale	White, with black lettering
Display	Class 1.5 similar to DIN EN 13190
Strain relief spring	For capillary devices on the case and the temperature probe
Setpoint value adjustment	By setpoint adjuster in the front pane
Display correction	On the rear
Limit value temperatures	For transport and storage -30 to +70 °C (for display range -40 to +40 °C up to max. 50 °C; -30 to +50 °C up to max. 60 °C)
Rated position (NL)	Any

Display range

Display range (AB)	Display range °C	Measuring range in °C	Tolerance in K (±)
469	-40 to +40	-30 to +30	1.5
643	-20 to +120	-20 to +120	3.0
807	0 to 60	10 to 50	1.5
814	0 to 100	10 to 90	1.5
818	0 to 120	20 to 100	3.0
832	0 to 200	20 to 180	3.0
840	0 to 300	30 to 270	6.0
848	0 to 400	50 to 350	6.0
854	0 to 500	50 to 450	8.0
858	0 to 600	100 to 500	10.0

Filling

	Liquid filling	Gas filling
Measuring system	Display range (AB) ≤ 350 °C	Display range (AB) ≥ 400 °C
Time constant $t_{0.632}$	Approx. 12 s, measured in water, with a probe-Ø of 6 mm made of copper	Approx. 4 s, measurend in oil, with a probe Ø of 10 mm made of stainless steel
Ambient temperature influence effect	In % of the display range (referring to the deviation from the reference value 23 °C)	
On case	0.15 % of the display range per K ambient temperature change	0.05 % of the display range per K ambient temperature change
On capillary (per m)	0.03 % of the display range per K ambient temperature change	No influence
	At higher ambient temperature - higher temperature display - lower switching point	

JUMO GmbH & Co. KG
Delivery address: Mackenrodtstraße 14
36039 Fulda, Germany
Postal address: 36035 Fulda, Germany
Phone: +49 661 6003-0
Fax: +49 661 6003-607
Email: mail@jumo.net
Internet: www.jumo.net

JUMO Instrument Co. Ltd.
JUMO House
Temple Bank, Riverway
Harlow, Essex, CM20 2DY, UK
Phone: +44 1279 63 55 33
Fax: +44 1279 62 50 29
Email: sales@jumo.co.uk
Internet: www.jumo.co.uk

JUMO Process Control, Inc.
6733 Myers Road
East Syracuse, NY 13057, USA
Phone: +1 315 437 5866
Fax: +1 315 437 5860
Email: info.us@jumo.net
Internet: www.jumousa.com

Electrical contact

Electrical contact	Standard	Extra code (TZ) 650
Contact type	Single-pole microswitch with mechanically actuated changeover contact	
Switching capacity	AC 230 V, +10/-15 %, 48 to 63 Hz, cos φ = 1 (0.6)	
	5 (1.5) A	10 (3) A
Swichting differential	Approx. 1.5 % of the display range	1.5 to 3 % of the display range
Switching point accuracy	±0.5 % of the display range referring to the switch-off point with rising temperature	
Switching reliability	To ensure a high switching reliability, we reccommend a minimum voltage of 24 V and a minimum current of 100 mA.	

Electrical connection

Electrical connection	Standard	Design type 02 and 22	Design type 10, 23 and extra code 426	Case Ø 60 mm
	Screw terminals, connection cross-section up to 2.5 mm^2	Connection cable 0.6 m ferrule	Cover cap with cable fitting, suitable for cable Ø from 6.5 to 13 mm	Cover cap with cable fitting, suitable for cable Ø from 8 to 10 mm

JUMO GmbH & Co. KG
Delivery address: Mackenrodtstraße 14
36039 Fulda, Germany
Postal address: 36035 Fulda, Germany
Phone: +49 661 6003-0
Fax: +49 661 6003-607
Email: mail@jumo.net
Internet: www.jumo.net

JUMO Instrument Co. Ltd.
JUMO House
Temple Bank, Riverway
Harlow, Essex, CM20 2DY, UK
Phone: +44 1279 63 55 33
Fax: +44 1279 62 50 29
Email: sales@jumo.co.uk
Internet: www.jumo.co.uk

JUMO Process Control, Inc.
6733 Myers Road
East Syracuse, NY 13057, USA
Phone: +1 315 437 5866
Fax: +1 315 437 5860
Email: info.us@jumo.net
Internet: www.jumousa.com

Dimensions

Type 608520/0280

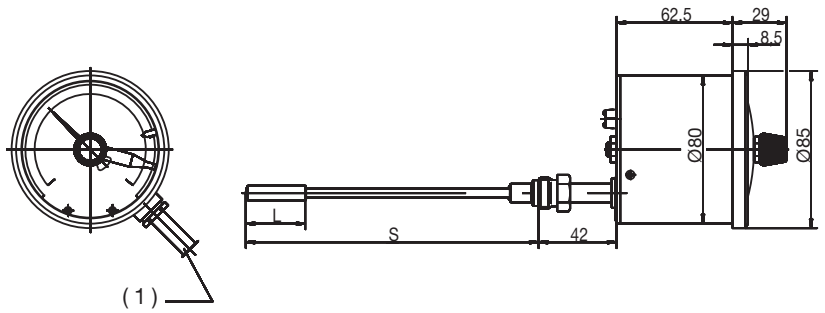

(1) Connecting cable 0.6 m

Type 608520/0210

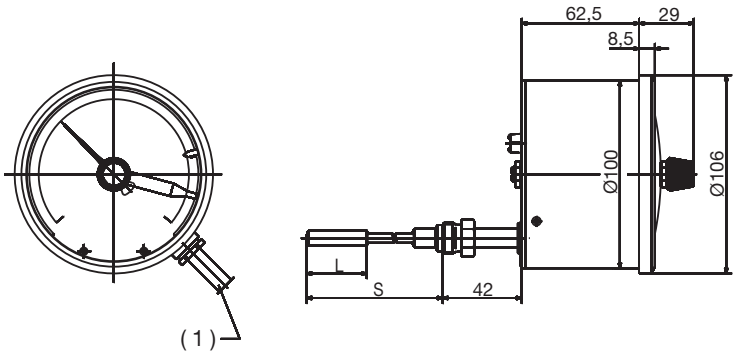

(1) Connecting cable 0.6 m

Type 608520/1080

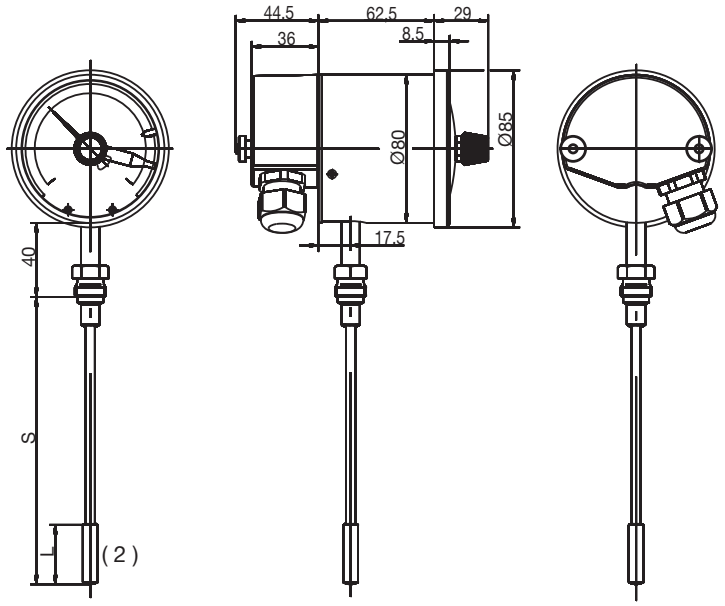

(2) Active probe dimension

JUMO GmbH & Co. KG
Delivery address: Mackenrodtstraße 14
36039 Fulda, Germany
Postal address: 36035 Fulda, Germany
Phone: +49 661 6003-0
Fax: +49 661 6003-607
Email: mail@jumo.net
Internet: www.jumo.net

JUMO Instrument Co. Ltd.
JUMO House
Temple Bank, Riverway
Harlow, Essex, CM20 2DY, UK
Phone: +44 1279 63 55 33
Fax: +44 1279 62 50 29
Email: sales@jumo.co.uk
Internet: www.jumo.co.uk

JUMO Process Control, Inc.
6733 Myers Road
East Syracuse, NY 13057, USA
Phone: +1 315 437 5866
Fax: +1 315 437 5860
Email: info.us@jumo.net
Internet: www.jumousa.com

Type 608550/1080 + TA24

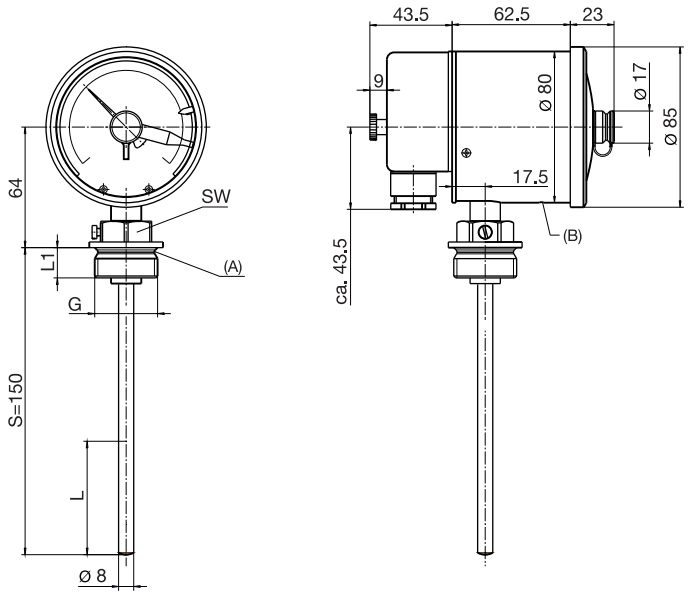

(A)	Screw-in spigot, DIN 3852 Form A	(B)	Air vent
(L)	Active probe dimension		for indication range 0 to 120 °C, approx 70 mm for indication range -20 to +120 °C, approx 60 mm

Type 608520/1010

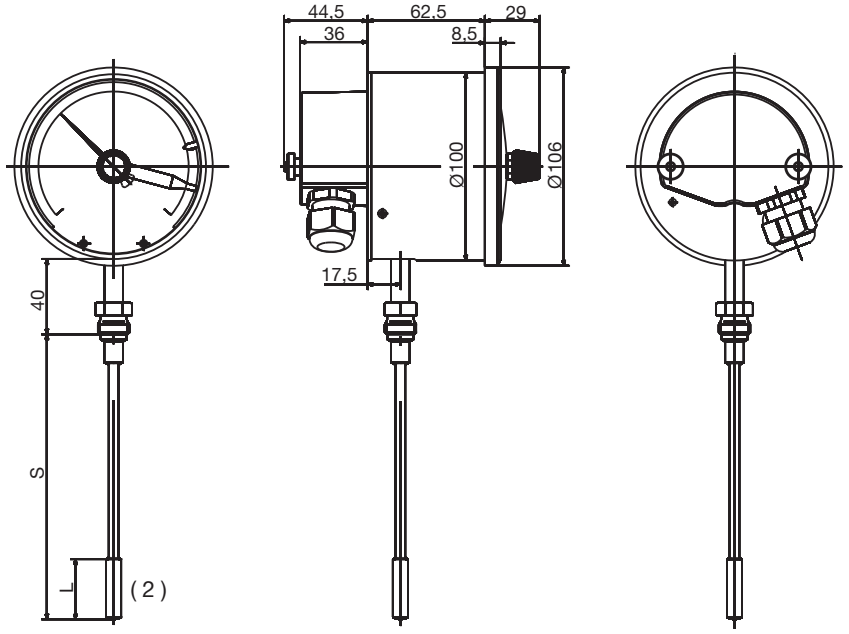

(2) Active probe dimension

JUMO GmbH & Co. KG
Delivery address: Mackenrodtstraße 14
36039 Fulda, Germany
Postal address: 36035 Fulda, Germany
Phone: +49 661 6003-0
Fax: +49 661 6003-607
Email: mail@jumo.net
Internet: www.jumo.net

JUMO Instrument Co. Ltd.
JUMO House
Temple Bank, Riverway
Harlow, Essex, CM20 2DY, UK
Phone: +44 1279 63 55 33
Fax: +44 1279 62 50 29
Email: sales@jumo.co.uk
Internet: www.jumo.co.uk

JUMO Process Control, Inc.
6733 Myers Road
East Syracuse, NY 13057, USA
Phone: +1 315 437 5866
Fax: +1 315 437 5860
Email: info.us@jumo.net
Internet: www.jumousa.com

Type 608520/2060

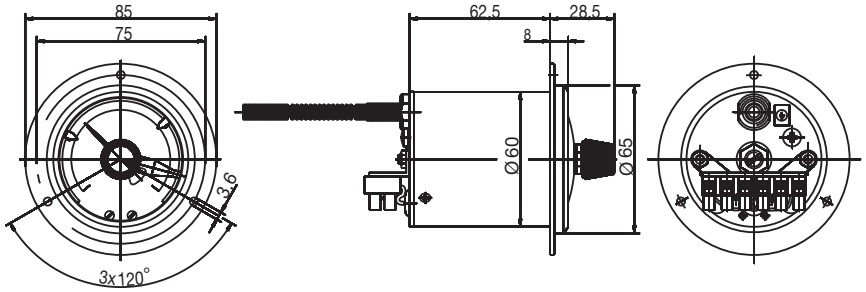

Panel cut-out for case Ø 60 mm = $62^{+0,5/0}$ mm

Type 608520/2080

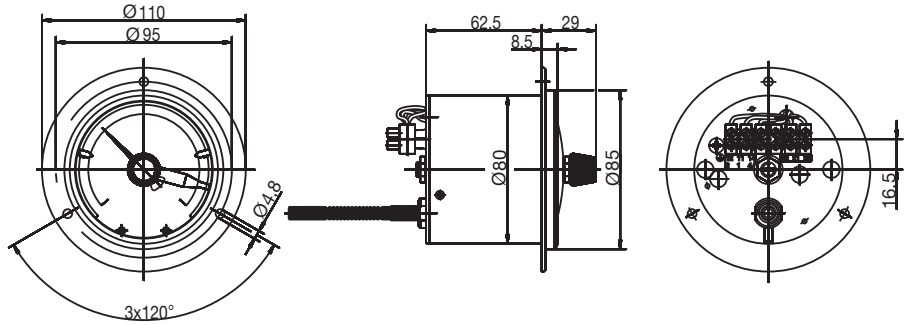

Panel cut-out for case Ø 80 mm = $82^{+0,5/0}$ mm

Type 608520/2010

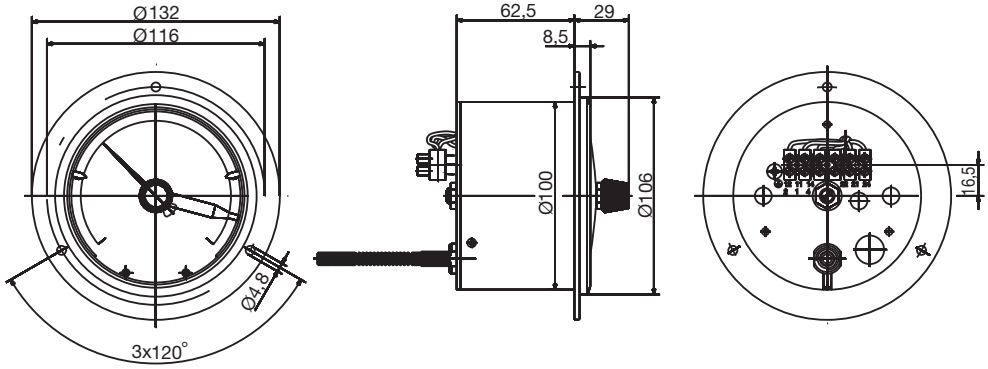

Panel cut-out for case Ø 100 mm = $100_{0}^{+0,5}$ mm

Type 608520/2160

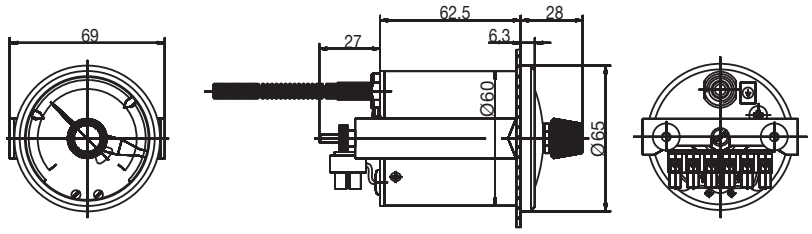

Panel cut-out for case Ø 60 mm = $62_{0}^{+0,5}$ mm

JUMO GmbH & Co. KG
Delivery address: Mackenrodtstraße 14
36039 Fulda, Germany
Postal address: 36035 Fulda, Germany
Phone: +49 661 6003-0
Fax: +49 661 6003-607
Email: mail@jumo.net
Internet: www.jumo.net

JUMO Instrument Co. Ltd.
JUMO House
Temple Bank, Riverway
Harlow, Essex, CM20 2DY, UK
Phone: +44 1279 63 55 33
Fax: +44 1279 62 50 29
Email: sales@jumo.co.uk
Internet: www.jumo.co.uk

JUMO Process Control, Inc.
6733 Myers Road
East Syracuse, NY 13057, USA
Phone: +1 315 437 5866
Fax: +1 315 437 5860
Email: info.us@jumo.net
Internet: www.jumousa.com

Type 608520/2180

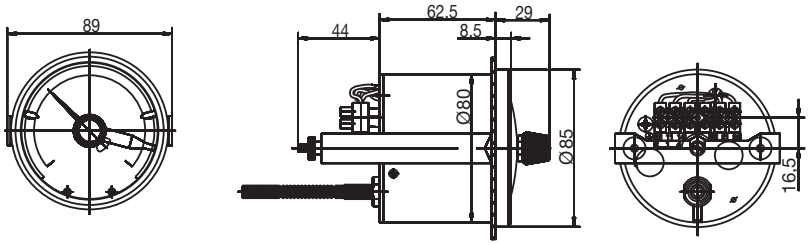

Panel cut-out for case Ø 80 mm = $82_0^{+0,5}$ mm

Type 608520/2110

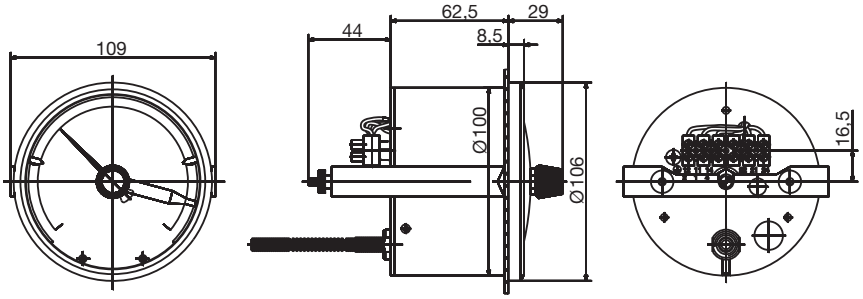

Panel cut-out for case Ø 100 mm = $100_0^{+0,5}$ mm

Type 608520/2280

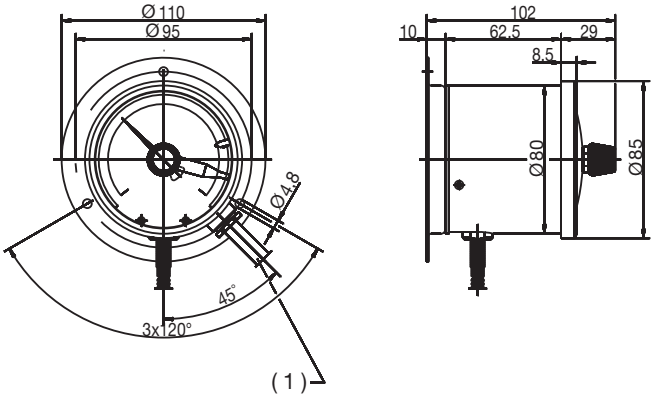

(1) Connecting cable 0.6 m long, ferrule

JUMO GmbH & Co. KG
Delivery address: Mackenrodtstraße 14
36039 Fulda, Germany
Postal address: 36035 Fulda, Germany
Phone: +49 661 6003-0
Fax: +49 661 6003-607
Email: mail@jumo.net
Internet: www.jumo.net

JUMO Instrument Co. Ltd.
JUMO House
Temple Bank, Riverway
Harlow, Essex, CM20 2DY, UK
Phone: +44 1279 63 55 33
Fax: +44 1279 62 50 29
Email: sales@jumo.co.uk
Internet: www.jumo.co.uk

JUMO Process Control, Inc.
6733 Myers Road
East Syracuse, NY 13057, USA
Phone: +1 315 437 5866
Fax: +1 315 437 5860
Email: info.us@jumo.net
Internet: www.jumousa.com

Type 608520/2210

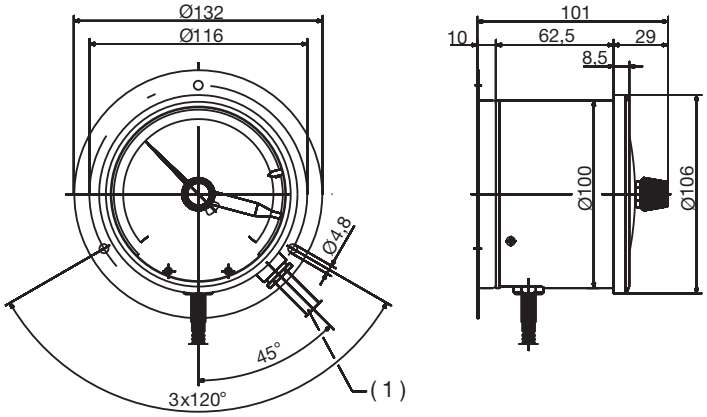

(1) Connecting cable 0.6 m long, ferrule

Type 608520/2380

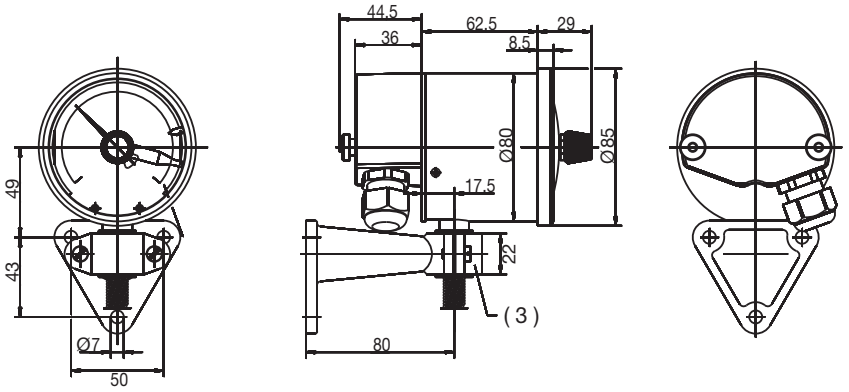

(3) Spigot Ø 20 mm

Type 608520/2310

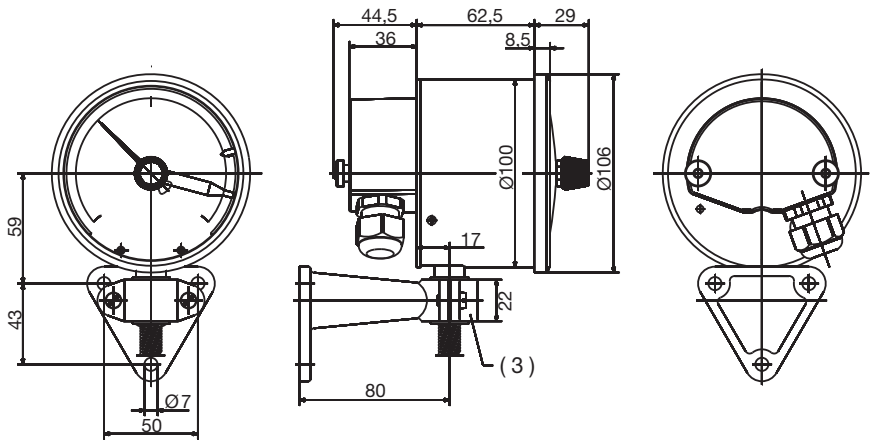

(3) Spigot Ø 20 mm

JUMO GmbH & Co. KG
Delivery address: Mackenrodtstraße 14
36039 Fulda, Germany
Postal address: 36035 Fulda, Germany
Phone: +49 661 6003-0
Fax: +49 661 6003-607
Email: mail@jumo.net
Internet: www.jumo.net

JUMO Instrument Co. Ltd.
JUMO House
Temple Bank, Riverway
Harlow, Essex, CM20 2DY, UK
Phone: +44 1279 63 55 33
Fax: +44 1279 62 50 29
Email: sales@jumo.co.uk
Internet: www.jumo.co.uk

JUMO Process Control, Inc.
6733 Myers Road
East Syracuse, NY 13057, USA
Phone: +1 315 437 5866
Fax: +1 315 437 5860
Email: info.us@jumo.net
Internet: www.jumousa.com

Type 608520/2572

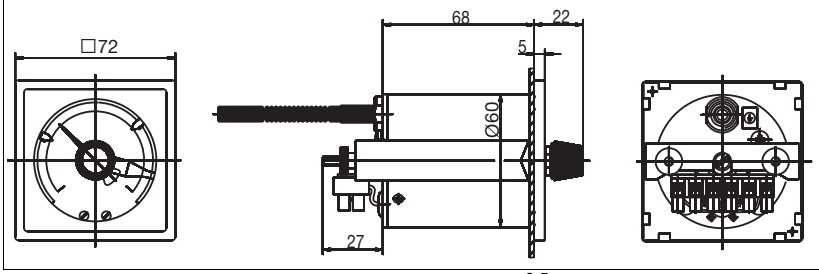

Panel cut-out for front panel 72 mm × 72 mm = Ø $62_{0}^{+0.5}$ mm

Type 608520/2596

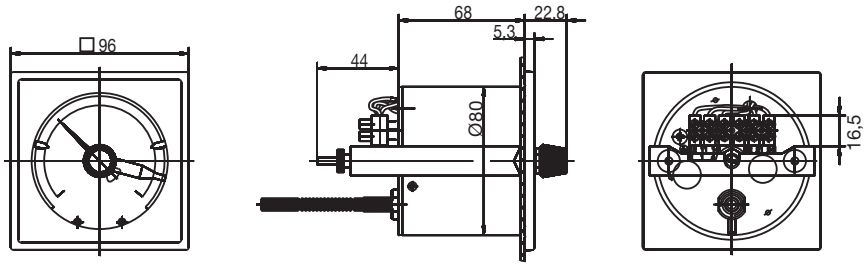

Panel cut-out for front panel 96 mm × 96 mm = Ø $82^{+0.5/0}$ mm or 92 mm × $92^{+0.5/0}$ mm (extra code 460)

JUMO GmbH & Co. KG
Delivery address: Mackenrodtstraße 14
36039 Fulda, Germany
Postal address: 36035 Fulda, Germany
Phone: +49 661 6003-0
Fax: +49 661 6003-607
Email: mail@jumo.net
Internet: www.jumo.net

JUMO Instrument Co. Ltd.
JUMO House
Temple Bank, Riverway
Harlow, Essex, CM20 2DY, UK
Phone: +44 1279 63 55 33
Fax: +44 1279 62 50 29
Email: sales@jumo.co.uk
Internet: www.jumo.co.uk

JUMO Process Control, Inc.
6733 Myers Road
East Syracuse, NY 13057, USA
Phone: +1 315 437 5866
Fax: +1 315 437 5860
Email: info.us@jumo.net
Internet: www.jumousa.com

Order details

(1)	**Basic type**		
608520	Mechanical contact dial thermometer, class 1.5		
608550	Mechanical contact dial thermometer, class 1.5 – Transformer version (only basic type extension 1080)		
(2)	**Basic type extension**		Case size Ø
0280	Design type 02	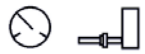	80 mm
0210	Design type 02		100 mm
1080	Design type 10		80 mm
1010	Design type 10		100 mm
2060	Design type 20		60 mm
2080	Design type 20		80 mm
2010	Design type 20		100 mm
2160	Design type 21	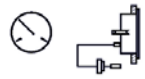	60 mm
2180	Design type 21		80 mm
2110	Design type 21		100 mm
2280	Design type 22		80 mm
2210	Design type 22		100 mm
2380	Design type 23		80 mm
2310	Design type 23		100 mm
2572	Design type 25	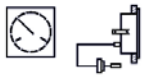	72 mm × 72 mm
2596	Design type 25		96 mm × 96 mm
(3)	**Display range in °C**		
469	-40 to +40		
643	-20 to +120		
807	0 to 60		
814	0 to 100		
818	0 to 120		
832	0 to 200		
840	0 to 300		
848	0 to 400		
854	0 to 500		
858	0 to 600		
(4)	**Capillary type**[a]		
00	Without (with rigid connection)		
02	FL 02 Cu capillary with Cu textile braiding, approx. Ø 2.5 mm (up to AB end value 300 °C)		
11	FL 11 Cu capillary with PE coating, approx. Ø 3.5 mm (up to AB end value 120 °C)		
17	FL 17 Stainless steel capillary, approx. Ø 1.5 mm		
21	FL 21 Cu capillary, approx. Ø 1.0 mm (up to AB end value 300 °C)		
(5)	**Capillary length**[b]		
0	Without (with rigid connection)		
1000	1000 mm		
2000	2000 mm		
3000	3000 mm		
4000	4000 mm		
5000	5000 mm		

JUMO GmbH & Co. KG
Delivery address: Mackenrodtstraße 14
36039 Fulda, Germany
Postal address: 36035 Fulda, Germany
Phone: +49 661 6003-0
Fax: +49 661 6003-607
Email: mail@jumo.net
Internet: www.jumo.net

JUMO Instrument Co. Ltd.
JUMO House
Temple Bank, Riverway
Harlow, Essex, CM20 2DY, UK
Phone: +44 1279 63 55 33
Fax: +44 1279 62 50 29
Email: sales@jumo.co.uk
Internet: www.jumo.co.uk

JUMO Process Control, Inc.
6733 Myers Road
East Syracuse, NY 13057, USA
Phone: +1 315 437 5866
Fax: +1 315 437 5860
Email: info.us@jumo.net
Internet: www.jumousa.com

...		Special length (specifications in plain text: 1,000 mm increments, maximum length 6,000 mm), additional lengths upon request	
	(6)	**Process connection**[a]	
750	TF 01	Temperature probe with stepped support tube	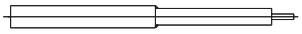
752	TF 11	Temperature probe without support tube	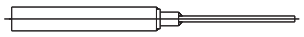
843	TA 02	Protection tube with union nut and loose screw connection[b]	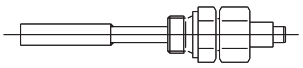
161	TA 03	Protection tube with loose screw connection	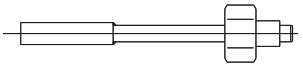
847	TA 06	Protection tube with displaceable threaded fitting on support tube[b]	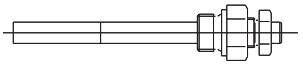
311	TA 20	Protection tube with loose screw connection and connection collar[b]	
872	TA 21	Protection tube with loose pressure screw and conical seal (only G 3/8 possible)	
873	TA 22	Protection tube with loose pressure screw, conical seal and loose screw connection[b]	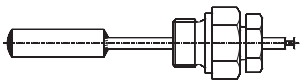
874	TA 24	Protection tube (CuNi) with screw connection (CuZn), O-ring seal and clamping screw[a, b]	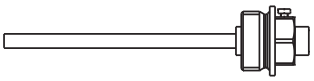
401	TA 23	Protection tube with pressure screw and contact pressure spring (only M10 × 1 possible)	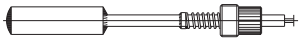
913	SH 07	Screw-in protection tube, multi-sectional, with clamping piece and fixing screw (suitable for TF 01 and TF 11)	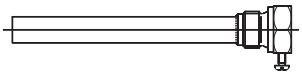
820	SH 09	Weld-in protection tube, multi-sectional, with clamping piece and fixing screw[b] (not for FL 21 - welding collar with steel 1.4515)	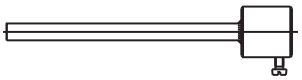
876	SH 10	Screw-in protection tube, multi-sectional[b] (suitable for TA 21)	
871	SH 11	Screw-in protection tube, multi-sectional[b] (suitable for TA 23)	
	(7)	**Diameter of process connection**[a]	
6	6 mm		
8	8 mm		
10	10 mm		
11	11 mm		
12	12 mm		
	(8)	**Thread type of process connection**[a]	
000	Without (for TA 01 and TF 11)		
103	Screw connection G 3/8		
104	Screw connection G 1/2		
105	Screw connection G 3/4		
106	Screw connection G 1		
114	Screw connection M10 × 1 (only with TA 23)		
	(9)	**Material probe/support tube**[a]	
26	Stainless steel (CrNi, 1.4571)		

JUMO GmbH & Co. KG
Delivery address: Mackenrodtstraße 14
36039 Fulda, Germany
Postal address: 36035 Fulda, Germany
Phone: +49 661 6003-0
Fax: +49 661 6003-607
Email: mail@jumo.net
Internet: www.jumo.net

JUMO Instrument Co. Ltd.
JUMO House
Temple Bank, Riverway
Harlow, Essex, CM20 2DY, UK
Phone: +44 1279 63 55 33
Fax: +44 1279 62 50 29
Email: sales@jumo.co.uk
Internet: www.jumo.co.uk

JUMO Process Control, Inc.
6733 Myers Road
East Syracuse, NY 13057, USA
Phone: +1 315 437 5866
Fax: +1 315 437 5860
Email: info.us@jumo.net
Internet: www.jumousa.com

96		Copper (Cu)/Brass (CuZn) (up to 200 °C)
95		Stainless steel (CrNi, 1.4571) - probe/brass (CuZn) - support tube (from 250 °C)
	(10)	**Process connection material**[a]
00		Without (only TF 01 and TF 11)
26		Stainless steel (CrNi, 1.4571)
46		Brass (CuZn)
	(11)	**Insertion length process connection**[a] (dimension „EL“ or „S“)
0		Minimum insertion length TF 11 (active probe dimension)
50		50 mm
100		100 mm
150		150 mm
200		200 mm
...		Special length (specifications in plain text, 50 mm increments)
	(12)	**Swichting output**
20		1 changeover switch 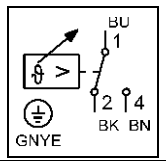
21		2 changeover switches 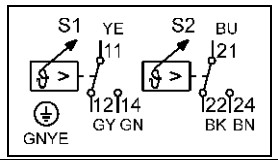
22		2 changeover switches with fixed sequence 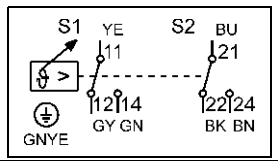
	(13)	**Extra codes**
000		Without
426		Cover cap to protect the screw terminals against contact and spray water (standard for design types 10 and 23; not for design type 02 and 22; not in conjunction with extra code 460)
430		Drag indicator (includes extra code 477)
460		Device centering for panel cut-out 92 mm × 92 mm (only for basic type extension 2596)
477		Setpoint adjustment protected by the bolted cover, adjustment with screwdriver
518		Stop for Min.- or Max.-setpoint value limitation, default setting
522		Customized scale
650		Microswitch 10 (3) A [AC/DC 230 V, +10/-15 %, 48 to 63 Hz, cos φ = 1 (0.6)]
Special versions upon request!		

[a] For the description and special features refer to data sheet 608730.

[b] Screw-in spigot according to DIN 3852, form A

	(1)		(2)		(3)		(4)		(5)		(6)		(7)		(8)		(9)		(10)		(11)		(12)		(13)	
Order code	[ ]	/	[ ]	-	[ ]	-	[ ]	-	[ ]	-	[ ]	-	[ ]	-	[ ]	-	[ ]	-	[ ]	-	[ ]	-	[ ]	/	[ ]	, ...[a]
Order example	608520	/	210	-	818	-	21	-	2000	-	104	-	10	-	000	-	26	-	00	-	100	-	20	/	650	

[a] List extra codes in sequence, separated by commas.

JUMO GmbH & Co. KG
Delivery address: Mackenrodtstraße 14
36039 Fulda, Germany
Postal address: 36035 Fulda, Germany
Phone: +49 661 6003-0
Fax: +49 661 6003-607
Email: mail@jumo.net
Internet: www.jumo.net

JUMO Instrument Co. Ltd.
JUMO House
Temple Bank, Riverway
Harlow, Essex, CM20 2DY, UK
Phone: +44 1279 63 55 33
Fax: +44 1279 62 50 29
Email: sales@jumo.co.uk
Internet: www.jumo.co.uk

JUMO Process Control, Inc.
6733 Myers Road
East Syracuse, NY 13057, USA
Phone: +1 315 437 5866
Fax: +1 315 437 5860
Email: info.us@jumo.net
Internet: www.jumousa.com

Stock versions

Delivery within 3 working days after receipt of order

Type	Display range °C	Switching output	Temperature probe, process connection	Protection tube mm	Part no.
608550/0180-643-874-8-106-50-150-20/434-522 with drag indicator	-20 to +120	20 (1 contact)	TF 05 d = 8 mm TA 24, G 1“, CuZn	150	00455918
608550/0180-643-874-8-106-50-150-21/434-522 with drag indicator		21 (2 contacts)			00455919

JUMO GmbH & Co. KG
Delivery address: Mackenrodtstraße 14
36039 Fulda, Germany
Postal address: 36035 Fulda, Germany
Phone: +49 661 6003-0
Fax: +49 661 6003-607
E-mail: mail@jumo.net
Internet: www.jumo.net

JUMO Instrument Co. Ltd.
JUMO House
Temple Bank, Riverway
Harlow, Essex CM20 2DY, UK
Phone: +44 1279 635533
Fax: +44 1279 635262
E-mail: sales@jumo.co.uk
Internet: www.jumo.co.uk

JUMO Process Control, Inc.
6733 Myers Road
East Syracuse, NY 13057, USA
Phone: 315-437-5866
1-800-554-5866
Fax: 315-437-5860
E-mail: info.us@jumo.net
Internet: www.jumousa.com

Contact Dial Thermometer

Special features

- Class 1.5
- Display range -40 to +600 °C
- Temperature controller with actual value display as built-in or add-on device in the stainless steel case with a bayonet connection
- Case size ∅: 100 mm
- Protection type IP65

Brief description

Contact dial thermometers are devices with an actual value display for temperature measurement, control, and monitoring and can be used universally.

The temperature-dependent volume change in a measuring system filled with liquid or the temperature-dependent pressure change in a measuring system filled with gas is converted to a rotational movement of the actual value indicator by a bourdon tube; no transmission gear is required. The microswitch is actuated by the rotational movement of the indicator shaft via a tap system.

Technical data

Basic type extension	0210, 1010, 2010, 2210, 2310
Case	Stainless steel case with bayonet connection (1.4301)
Protection type	IP65 according to DIN EN 60529
Front pane	Polycarbonate
Scale	White, with black lettering
Display	Class 1.5 similar to DIN EN 13190
Strain relief spring	For capillary devices on the case and the temperature probe
Setpoint value adjustment	By setpoint adjuster in the front pane; with screwdriver, protected by the bolted cover.
Display correction	On the rear, no display correction with design type 20
Limit value temperatures	For transport and storage -20 to +70 °C (for display range 0 to +60 °C up to max. 65 °C; -40 to +40 °C up to max. 50 °C; -30 to +50 °C up to max. 60 °C)
Rated position (NL)	Any

JUMO GmbH & Co. KG
Delivery address: Mackenrodtstraße 14
36039 Fulda, Germany
Postal address: 36035 Fulda, Germany
Phone: +49 661 6003-0
Fax: +49 661 6003-607
E-mail: mail@jumo.net
Internet: www.jumo.net

JUMO Instrument Co. Ltd.
JUMO House
Temple Bank, Riverway
Harlow, Essex CM20 2DY, UK
Phone: +44 1279 635533
Fax: +44 1279 635262
E-mail: sales@jumo.co.uk
Internet: www.jumo.co.uk

JUMO Process Control, Inc.
6733 Myers Road
East Syracuse, NY 13057, USA
Phone: 315-437-5866
1-800-554-5866
Fax: 315-437-5860
E-mail: info.us@jumo.net
Internet: www.jumousa.com

Technical data

Display range (AB)	Display range in °C	Measuring range in °C	Tolerance in °C (+/-)
469	-40 to +40	-30 to +30	1.5
566	-30 to +50	-20 to +40	1.5
643	-20 to +120	0 to +100	3.0
807	0 to +60	+10 to +50	1.5
810	0 to +80	+10 to +70	1.5
814	0 to +100	+10 to +90	1.5
818	0 to +120	+20 to +100	3.0
826	0 to +160	+20 to +140	3.0
832	0 to +200	+20 to +180	3.0
834	0 to +250	+30 to +220	4.0
926	+50 to +250	+70 to +230	3.0
840	0 to +300	+30 to +270	6.0
927	+50 to +300	+80 to +270	4.0
843	0 to +350	+50 to +300	6.0
932	+50 to +350	+80 to +320	6.0
848	0 to +400	+50 to +350	6.0
851	0 to +450	+50 to +400	6.0
854	0 to +500	+50 to +450	8.0
858	0 to +600	+100 to +500	10.0

	Liquid filling	**Gas filling**
Measuring system	Display range (AB) ≤ 350 °C	Display range (AB) ≥ 400 °C
Time constant $t_{0.632}$	Approx. 12 s, measured in water, with a probe Ø of 6 mm made of Cu.	Approx. 4 s, measured in oil, with a probe Ø of 10 mm made of stainless steel.
Ambient temperature influence effect	In % of the display range (referring to the deviation from the reference value +23 °C)	
On case	0.15% of the display range per K ambient temperature change	0.05% of the display range per K ambient temperature change
On capillary (per m)	0.03% of the display range per K ambient temperature change	No influence
	At higher ambient temperature – higher temperature display – lower switching point	

	Standard	**Extra code (TZ) 650**
Electrical contact **Contact type**	Single-pole microswitch with mechanically actuated changeover contact	
Switching capacity	AC 230V, +10/-15%, 48 to 63Hz, cos φ = 1 (0.6)	
	5 (1.5) A	10 (3) A
Switching differential	Approx. 1.5% of the display range	1.5 to 3% of the display range
Switching point accuracy	± 0.5% of the display range referring to the switch-off point with rising temperature	
Switching reliability	To ensure a high switching reliability, we recommend a minimum voltage of 24 V and a minimum current of 100 mA	

Electrical connection	Junction box: conductor cross-section up to 2.5 mm^2, suitable for cable Ø from 6.5 to 13 mm

JUMO GmbH & Co. KG
Delivery address: Mackenrodtstraße 14
36039 Fulda, Germany
Postal address: 36035 Fulda, Germany
Phone: +49 661 6003-0
Fax: +49 661 6003-607
E-mail: mail@jumo.net
Internet: www.jumo.net

JUMO Instrument Co. Ltd.
JUMO House
Temple Bank, Riverway
Harlow, Essex CM20 2DY, UK
Phone: +44 1279 635533
Fax: +44 1279 635262
E-mail: sales@jumo.co.uk
Internet: www.jumo.co.uk

JUMO Process Control, Inc.
6733 Myers Road
East Syracuse, NY 13057, USA
Phone: 315-437-5866
1-800-554-5866
Fax: 315-437-5860
E-mail: info.us@jumo.net
Internet: www.jumousa.com

Dimensions

Type:
608523/0210

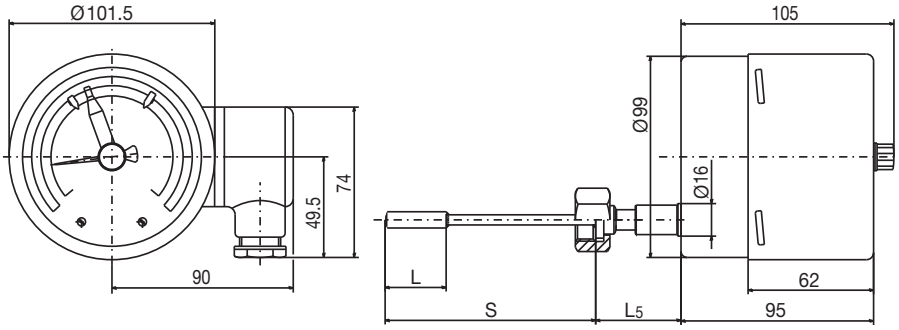

Type:
608523/1010

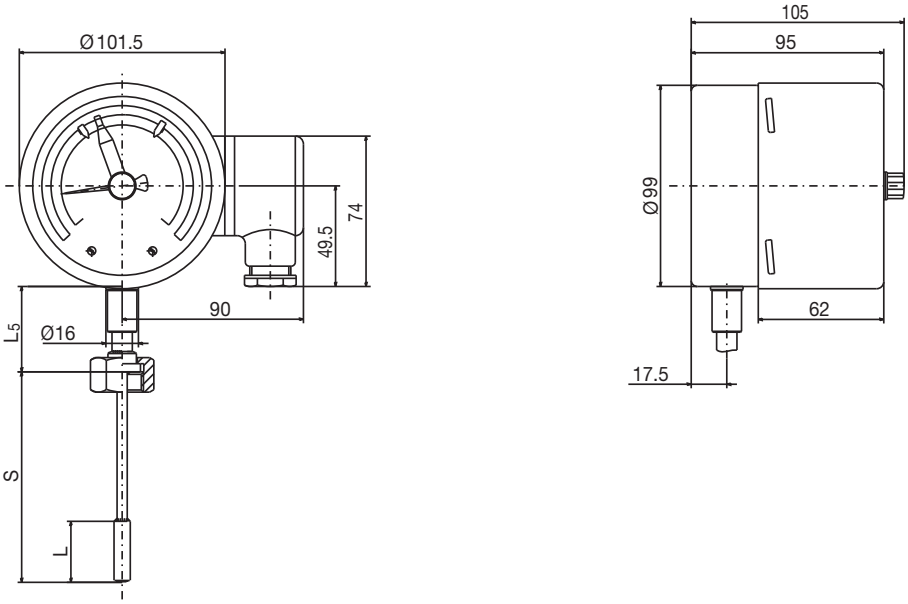

Type:
608523/1010 + TA24

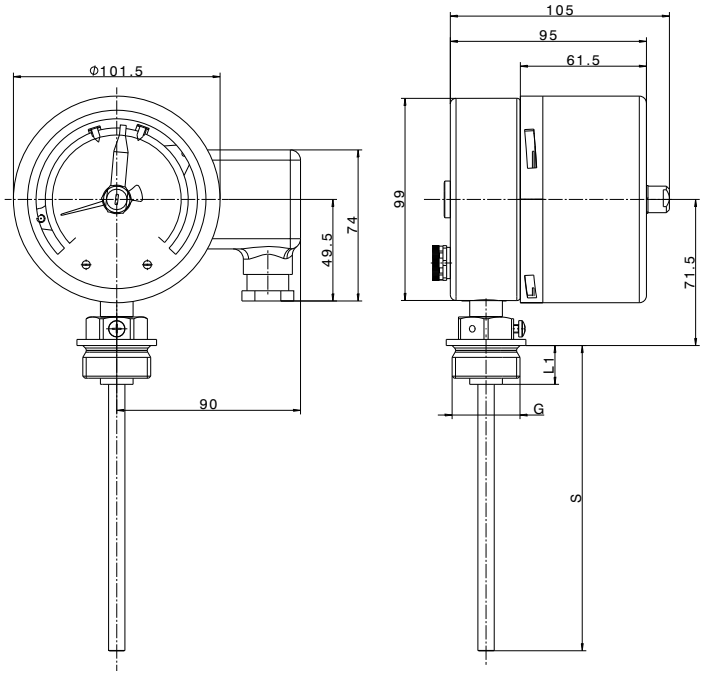

JUMO GmbH & Co. KG
Delivery address: Mackenrodtstraße 14
36039 Fulda, Germany
Postal address: 36035 Fulda, Germany
Phone: +49 661 6003-0
Fax: +49 661 6003-607
E-mail: mail@jumo.net
Internet: www.jumo.net

JUMO Instrument Co. Ltd.
JUMO House
Temple Bank, Riverway
Harlow, Essex CM20 2DY, UK
Phone: +44 1279 635533
Fax: +44 1279 635262
E-mail: sales@jumo.co.uk
Internet: www.jumo.co.uk

JUMO Process Control, Inc.
6733 Myers Road
East Syracuse, NY 13057, USA
Phone: 315-437-5866
1-800-554-5866
Fax: 315-437-5860
E-mail: info.us@jumo.net
Internet: www.jumousa.com

Type:
608523/2010

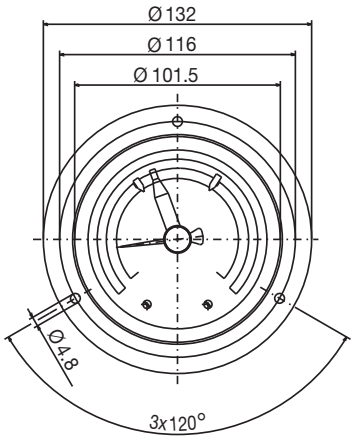

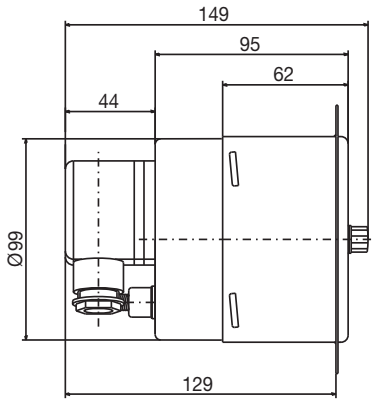

Panel cut-out Ø 105 $^{+0.5}_{0}$ mm

Type:
608523/2210

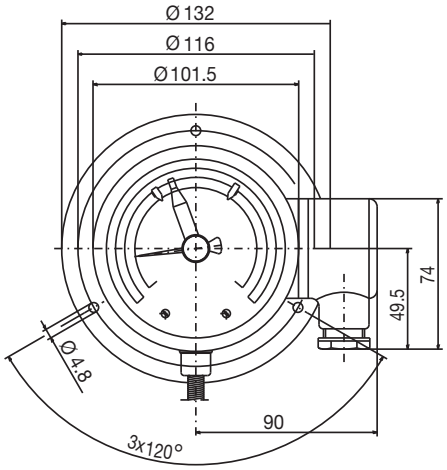

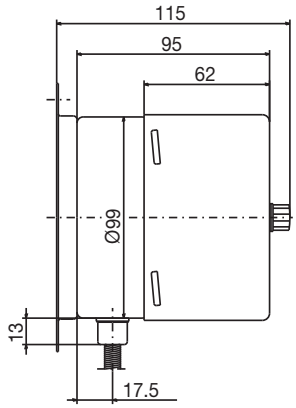

Panel cut-out Ø 105 $^{+0.5}_{0}$ mm

Type:
608523/2310

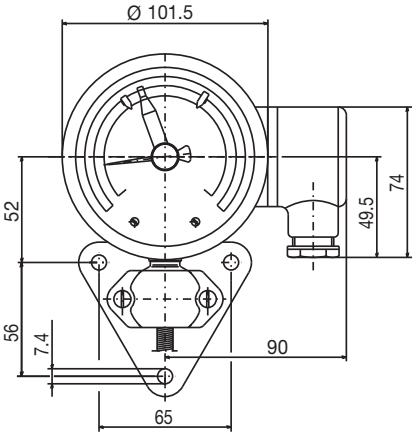

Bracket for measuring device according to DIN 16281

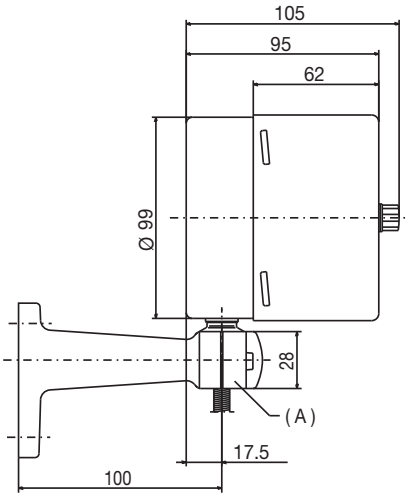

(A) Spigot Ø 26 mm

L_5	Protection tube connection type
40 mm	TA 03, TA 30
≤ 69 mm	TA 02
42.5 mm	TA 21
51.5 mm	TA 22, TA 31

JUMO GmbH & Co. KG
Delivery address: Mackenrodtstraße 14
36039 Fulda, Germany
Postal address: 36035 Fulda, Germany
Phone: +49 661 6003-0
Fax: +49 661 6003-607
E-mail: mail@jumo.net
Internet: www.jumo.net

JUMO Instrument Co. Ltd.
JUMO House
Temple Bank, Riverway
Harlow, Essex CM20 2DY, UK
Phone: +44 1279 635533
Fax: +44 1279 635262
E-mail: sales@jumo.co.uk
Internet: www.jumo.co.uk

JUMO Process Control, Inc.
6733 Myers Road
East Syracuse, NY 13057, USA
Phone: 315-437-5866
1-800-554-5866
Fax: 315-437-5860
E-mail: info.us@jumo.net
Internet: www.jumousa.com

Order details

Order code	(1)	Basic type
608523		Mechanical contact dial thermometer class 1.5

	(2)	Basic type extension		Case size Ø
0210		Design type 02	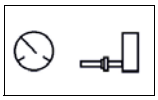	100 mm
1010		Design type 10	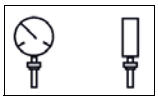	100 mm
2010		Design type 20	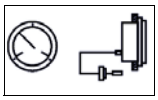	100 mm
2210		Design type 22	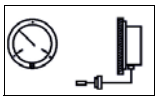	100 mm
2310		Design type 23	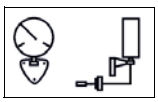	100 mm

	(3)	Display range in °C
469		-40 to +40
566		-30 to +50
643		-20 to +120
807		0 to +60
810		0 to +80
814		0 to +100
818		0 to +120
826		0 to +160
832		0 to +200
834		0 to +250
926		+50 to +250
840		0 to +300
927		+50 to +300
843		0 to +350
932		+50 to +350
848		0 to +400
851		0 to +450
854		0 to +500
858		0 to +600

JUMO GmbH & Co. KG
Delivery address: Mackenrodtstraße 14
36039 Fulda, Germany
Postal address: 36035 Fulda, Germany
Phone: +49 661 6003-0
Fax: +49 661 6003-607
E-mail: mail@jumo.net
Internet: www.jumo.net

JUMO Instrument Co. Ltd.
JUMO House
Temple Bank, Riverway
Harlow, Essex CM20 2DY, UK
Phone: +44 1279 635533
Fax: +44 1279 635262
E-mail: sales@jumo.co.uk
Internet: www.jumo.co.uk

JUMO Process Control, Inc.
6733 Myers Road
East Syracuse, NY 13057, USA
Phone: 315-437-5866
1-800-554-5866
Fax: 315-437-5860
E-mail: info.us@jumo.net
Internet: www.jumousa.com

Order code	(4)	Capillary type (FL) [a]
00		Without (with rigid connection)
02		FL 02 Cu capillary with Cu textile braiding, approx. Ø 2.5 mm (up to AB end value +300 °C)
11		FL 11 Cu capillary with PE coating, approx. ø 3.5 mm (up to AB end value +120 °C)
17		FL 17 Stainless steel capillary, approx. Ø 1.5 mm
21		FL 21 Cu capillary, approx. Ø 1.0 mm (up to AB end value +300 °C)

	(5)	Capillary length [b]
0		Without (with rigid connection)
1000		1000 mm
2000		2000 mm
3000		3000 mm
4000		4000 mm
5000		5000 mm
. . . .		Special length (specification in plain text: 1,000 mm increments, maximum length 10,000 mm), additional lengths upon request

	(6)	Process connection (PC)[a]	
750	TF 01	Temperature probe with stepped support tube	
752	TF 11	Temperature probe without support tube	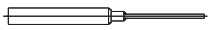
843	TA 02	Protection tube with union nut and loose screw connection [b]	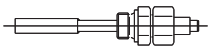
161	TA 03	Protection tube with loose screw connection	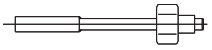
847	TA 06	Protection tube with displaceable threaded fitting on support tube [b]	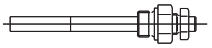
311	TA 20	Protection tube with loose screw connection and connection collar [b]	
872	TA 21	Protection tube with loose pressure screw and conical seal (only G 3/8 possible)	
873	TA 22	Protection tube with loose pressure screw, conical seal, and loose screw connection [b]	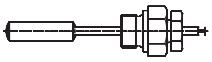
401	TA 23	Protection tube with pressure screw and contact pressure spring (only M 10x1 possible)	
874	TA 24	Protection tube (CuNi) with screw connection (CuZn), O-ring seal and clamping screw [a b]	
913	SH 07	Screw-in protection tube, multi-sectional, with clamping piece and fixing screw (suitable for TF 01 and TF 11)	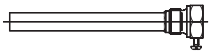
820	SH 09	Weld-in protection tube, multi-sectional, with clamping piece and fixing screw[b] (not for FL 21 – welding collar with steel 1.4515)	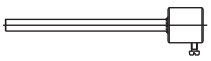
876	SH 10	Screw-in protection tube, multi-sectional[b] (suitable for TA 21)	
871	SH 11	Screw-in protection tube, multi-sectional[b] (suitable for TA 21)	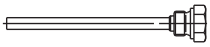

[a] For the description and special features refer to data sheet 608730.
[b] Screw-in spigot according to DIN 3852, form A.

JUMO GmbH & Co. KG
Delivery address: Mackenrodtstraße 14
36039 Fulda, Germany
Postal address: 36035 Fulda, Germany
Phone: +49 661 6003-0
Fax: +49 661 6003-607
E-mail: mail@jumo.net
Internet: www.jumo.net

JUMO Instrument Co. Ltd.
JUMO House
Temple Bank, Riverway
Harlow, Essex CM20 2DY, UK
Phone: +44 1279 635533
Fax: +44 1279 635262
E-mail: sales@jumo.co.uk
Internet: www.jumo.co.uk

JUMO Process Control, Inc.
6733 Myers Road
East Syracuse, NY 13057, USA
Phone: 315-437-5866
1-800-554-5866
Fax: 315-437-5860
E-mail: info.us@jumo.net
Internet: www.jumousa.com

Order code	(7)	Ø Process connection (PC) [a]
6		6 mm
8		8 mm
10		10 mm
11		11 mm
12		12 mm

	(8)	Thread type of process connection (PC)[a]
000		Without thread (for TA 01 and TF 11)
103		Screw connection G 3/8
104		Screw connection G 1/2
105		Screw connection G 3/4
106		Screw connection G 1
114		Screw connection M 10 x 1 (only with TA 23 and SH 11)

	(9)	Material, probe / support tube [a]
26		Stainless steel (CrNi, 1.4571)
96		Copper (Cu) / Brass (CuZn) (up to 200 °C)
95		Stainless steel (CrNi, 1.4571) - probe / Brass (CuZn) - support tube from 250 °C)

	(10)	Material of process connection (PC)[a]
00		Without (only TF 01 and TF 11)
26		Stainless steel (CrNi, 1.4571)
46		Brass (CuZn)

	(11)	Insertion length, process connection (PC) [a] (dimension "EL" or "S")
0		Minimum insertion length TF 11 (active probe dimension)
50		50 mm
100		100 mm
150		150 mm
200		200 mm
. . .		Special length (specifications in plain text – 50 mm increments)

[a] For the description and special features refer to data sheet 608730.

JUMO GmbH & Co. KG
Delivery address: Mackenrodtstraße 14
36039 Fulda, Germany
Postal address: 36035 Fulda, Germany
Phone: +49 661 6003-0
Fax: +49 661 6003-607
E-mail: mail@jumo.net
Internet: www.jumo.net

JUMO Instrument Co. Ltd.
JUMO House
Temple Bank, Riverway
Harlow, Essex CM20 2DY, UK
Phone: +44 1279 635533
Fax: +44 1279 635262
E-mail: sales@jumo.co.uk
Internet: www.jumo.co.uk

JUMO Process Control, Inc.
6733 Myers Road
East Syracuse, NY 13057, USA
Phone: 315-437-5866
1-800-554-5866
Fax: 315-437-5860
E-mail: info.us@jumo.net
Internet: www.jumousa.com

Order code	(12)	Switching output	
28		1 switch	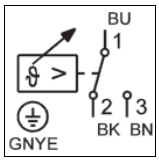
27		2 switches	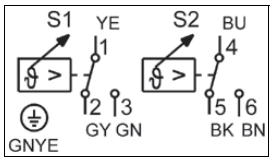
19		2 switches in fixed sequence	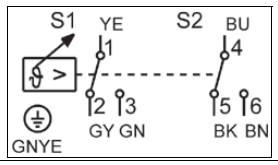

	(13)	Extra codes (TZ)
000		Without extra code
434		Drag indicator can be adjusted with a screwdriver, protected by a cover
650		Microswitch 10 (3) A (AC/DC 230 V, +10/-15%, 48 to 63 Hz, cos φ = 1 (0.6))
518		Stop for Min. — or Max. — setpoint value limitation, default setting
522		Customized scale

Special versions upon request!

Order code

(1)		(2)		(3)		(4)		(5)		(6)		(7)		(8)		(9)		(10)		(11)		(12)		(13)	
608523	/	. . . .	-	. . .	-	. .	-	. . . .	-	. . .	-	. .	-	. . .	-	. .	-	. .	-	. . .	-	. .	/	. . .	, . . .

Order example

608523	/	2010	-	818	-	21	-	2000	-	750	-	10	-	000	-	26	-	00	-	100	-	28	/	000[a]	, . . .

[a] List extra codes in sequence, separated by commas.

JUMO GmbH & Co. KG
Delivery address: Mackenrodtstraße 14
36039 Fulda, Germany
Postal address: 36035 Fulda, Germany
Phone: +49 661 6003-0
Fax: +49 661 6003-607
Email: mail@jumo.net
Internet: www.jumo.net

JUMO Instrument Co. Ltd.
JUMO House
Temple Bank, Riverway
Harlow, Essex, CM20 2DY, UK
Phone: +44 1279 63 55 33
Fax: +44 1279 62 50 29
Email: sales@jumo.co.uk
Internet: www.jumo.co.uk

JUMO Process Control, Inc.
6733 Myers Road
East Syracuse, NY 13057, USA
Phone: +1 315 437 5866
Fax: +1 315 437 5860
Email: info.us@jumo.net
Internet: www.jumousa.com

JUMO dicoTEMP 800

Dial thermometer with microswitch

Special features

- Low mounting depth
- Class 1.5
- Display ranges from -50 to +500 °C
- Temperature controller with actual value display with panel mount, stainless steel case
- 1 microswitch
- Case size Ø 80 mm

Type 608530/2180

Brief description

Dial thermometers with microswitches are universal temperature controllers with an actual value display for temperature measurement, control, and monitoring.

The temperature-dependent volume change in a measuring system filled with liquid, or the temperature-dependent pressure change in a measuring system filled with gas, is converted to a rotational movement of the actual value indicator by a bourdon tube; no transmission gear is required. The microswitch is actuated by the rotational movement of the indicator shaft via a tap system.

Series 608530 dial thermometers with microswitches are RoHS-compliant and cadmium-free.

JUMO GmbH & Co. KG
Delivery address: Mackenrodtstraße 14
36039 Fulda, Germany
Postal address: 36035 Fulda, Germany
Phone: +49 661 6003-0
Fax: +49 661 6003-607
Email: mail@jumo.net
Internet: www.jumo.net

JUMO Instrument Co. Ltd.
JUMO House
Temple Bank, Riverway
Harlow, Essex, CM20 2DY, UK
Phone: +44 1279 63 55 33
Fax: +44 1279 62 50 29
Email: sales@jumo.co.uk
Internet: www.jumo.co.uk

JUMO Process Control, Inc.
6733 Myers Road
East Syracuse, NY 13057, USA
Phone: +1 315 437 5866
Fax: +1 315 437 5860
Email: info.us@jumo.net
Internet: www.jumousa.com

Technical data

Housing and front panel	Stainless steel (1.4301)
Protection type	Front IP54, rear IP00 according to DIN EN 60529
Front pane	Acrylic glass (PMMA)
Chassis	Die-cast
Scale	White, with black lettering
Display	Class 1.5 similar to DIN EN 13190
Strain relief spring	For capillary devices on the housing and temperature probe
Switching capacity	Max. 5 A, 230 V/optional max. 10 A, 230 V
Setpoint value adjustment	By setpoint adjuster in the front pane
Limit value temperatures	For transport, storage, and operation -30 to +70 °C
Weight	Approx. 350 g
Rated position (NL)	Any

Display range (AB)	Display range in °C	Measuring range in °C	Tolerance in K (±)
818	0 to 120	20 to 100	3
834	0 to 250	30 to 220	5
926	50 to 250	70 to 230	4
927	50 to 300	80 to 270	5

	Liquid fill	Gas fill
Measuring system	Display range (AB) ≤ 350 °C	Display range (AB) ≥ 400 °C
Time constant $t_{0.632}$	Approx. 12 s, measured in water, with a probe Ø of 6 mm made of copper	Approx. 4 s, measured in oil, with a probe Ø of 10 mm made of stainless steel
Ambient temperature influence effect	In % of display range (relative to the deviation from the reference value 23 °C)	
On housing	0.15 % of display range per K ambient temperature change	0.05 % of display range per K ambient temperature change
On capillary (per m)	0.03 % of display range per K ambient temperature change	No influence
	At higher ambient temperature – higher temperature display – lower switching point	

Electrical contact	Standard	Optional
Contact type	Single-pole microswitch with mechanically actuated changeover contact	
Switching capacity	AC 230 V, +10 %, cos φ = 1 (0.6)	
	5(1.5) A	10(3) A
Switching contact	Must be fused accordingly	
Switching differential	Approx. 1.5 % of display range	1.5 to 3 % of display range
Switching point accuracy	±0.5 % of the display range referring to the switch-off point with rising temperature	
Switching reliability	To ensure the maximum possible switching reliability, we recommend a minimum voltage of 24 V and a minimum current of 100 mA.	

Electrical connection	Standard: screw terminals, connection cross section up to 2.5 mm^2

JUMO GmbH & Co. KG
Delivery address: Mackenrodtstraße 14
36039 Fulda, Germany
Postal address: 36035 Fulda, Germany
Phone: +49 661 6003-0
Fax: +49 661 6003-607
Email: mail@jumo.net
Internet: www.jumo.net

JUMO Instrument Co. Ltd.
JUMO House
Temple Bank, Riverway
Harlow, Essex, CM20 2DY, UK
Phone: +44 1279 63 55 33
Fax: +44 1279 62 50 29
Email: sales@jumo.co.uk
Internet: www.jumo.co.uk

JUMO Process Control, Inc.
6733 Myers Road
East Syracuse, NY 13057, USA
Phone: +1 315 437 5866
Fax: +1 315 437 5860
Email: info.us@jumo.net
Internet: www.jumousa.com

Dimensions

Type 608530/2060

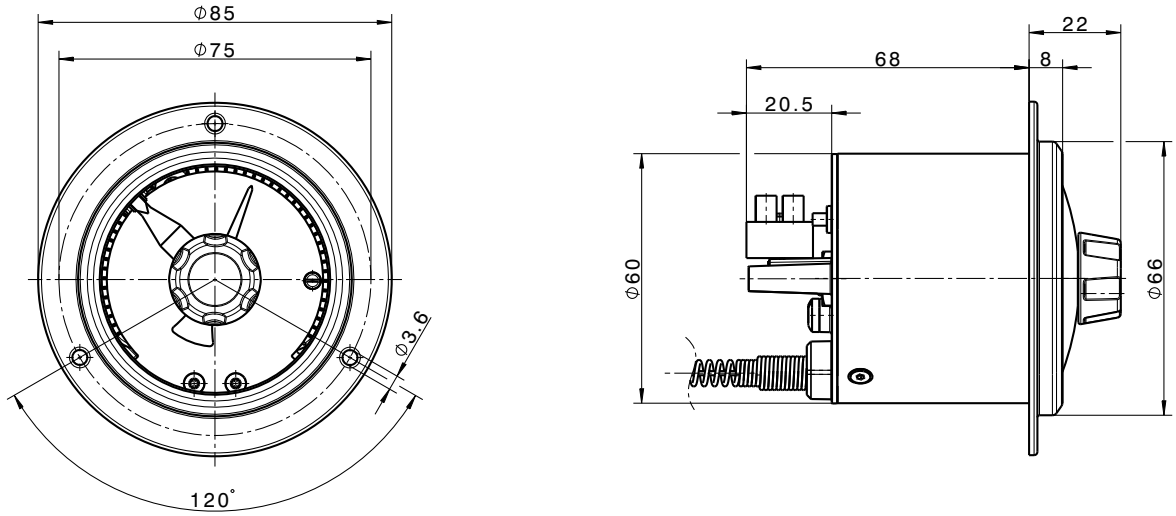

Type 608530/2080

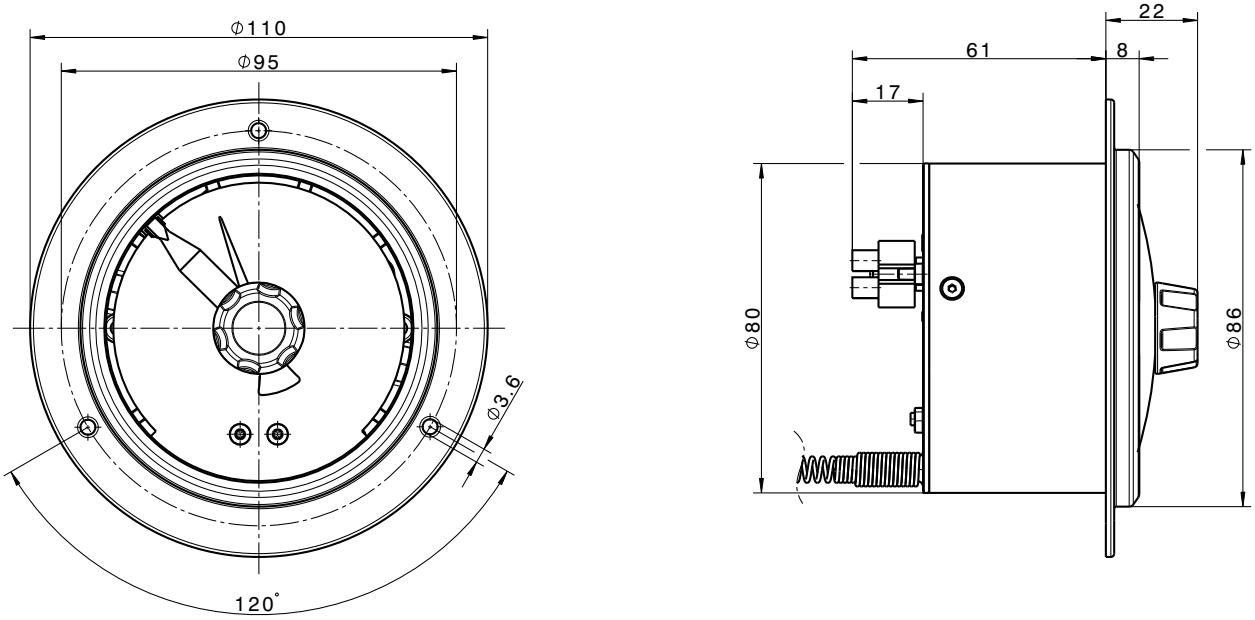

JUMO GmbH & Co. KG
Delivery address: Mackenrodtstraße 14
36039 Fulda, Germany
Postal address: 36035 Fulda, Germany
Phone: +49 661 6003-0
Fax: +49 661 6003-607
Email: mail@jumo.net
Internet: www.jumo.net

JUMO Instrument Co. Ltd.
JUMO House
Temple Bank, Riverway
Harlow, Essex, CM20 2DY, UK
Phone: +44 1279 63 55 33
Fax: +44 1279 62 50 29
Email: sales@jumo.co.uk
Internet: www.jumo.co.uk

JUMO Process Control, Inc.
6733 Myers Road
East Syracuse, NY 13057, USA
Phone: +1 315 437 5866
Fax: +1 315 437 5860
Email: info.us@jumo.net
Internet: www.jumousa.com

Type 608530/2160

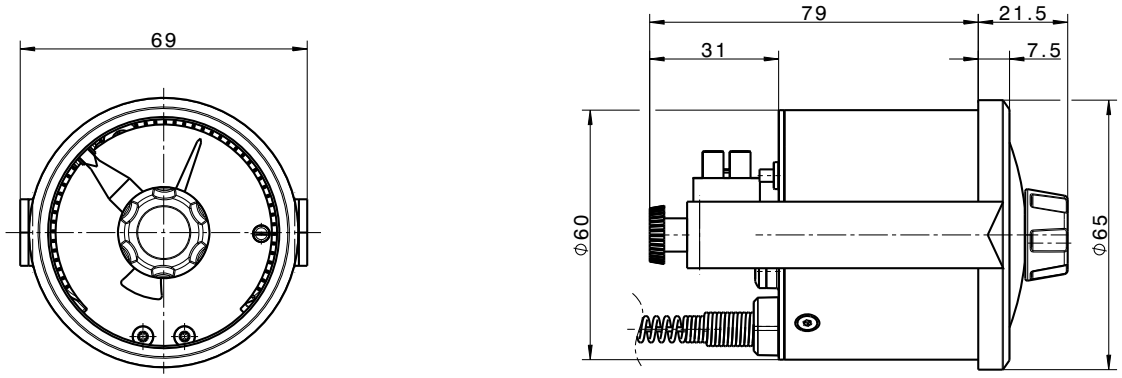

Type 608530/2180

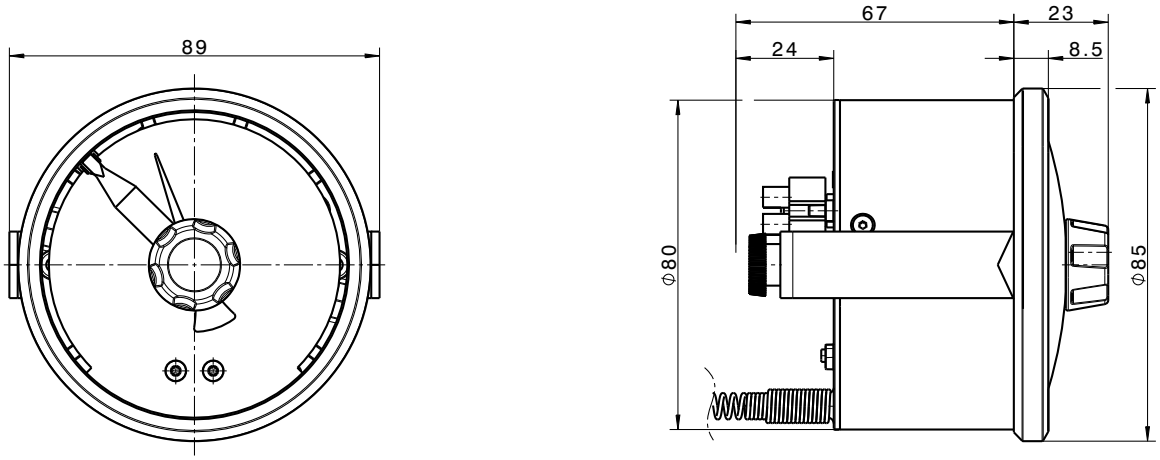

JUMO GmbH & Co. KG
Delivery address: Mackenrodtstraße 14
36039 Fulda, Germany
Postal address: 36035 Fulda, Germany
Phone: +49 661 6003-0
Fax: +49 661 6003-607
Email: mail@jumo.net
Internet: www.jumo.net

JUMO Instrument Co. Ltd.
JUMO House
Temple Bank, Riverway
Harlow, Essex, CM20 2DY, UK
Phone: +44 1279 63 55 33
Fax: +44 1279 62 50 29
Email: sales@jumo.co.uk
Internet: www.jumo.co.uk

JUMO Process Control, Inc.
6733 Myers Road
East Syracuse, NY 13057, USA
Phone: +1 315 437 5866
Fax: +1 315 437 5860
Email: info.us@jumo.net
Internet: www.jumousa.com

Order details

	(1)	**Basic type**
608530		JUMO dicoTEMP 800 – Dial thermometer with 1 microswitch, class 1.5
	(2)	**Basic type extensions**
2060		Design type 20, housing size Ø 60 mm
2080		Design type 20, housing size Ø 80 mm
2160		Design type 21, housing size Ø 60 mm
2180		Design type 21, housing size Ø 80 mm
	(3)	**Display range**
818		0 to 120 °C
834		0 to 250 °C
926		50 to 250 °C
927		50 to 300 °C
	(4)	**Switching capacity**
11		AC/DC 24 V, 0.1 A
26		AC 230 V, 5(1,5) A, cos = 1(0.6)
27		AC 230 V, 10(3) A, cos = 1(0.6)
	(5)	**Capillary type**
17		FL17 Stainless steel capillary, Ø 1.5 mm
21		FL21 Cu capillary, Ø 1.0 mm
22		FL22 Stainless steel capillary, Ø 1 mm
	(6)	**Capillary length**
1000		1000 mm
2000		2000 mm
...		Special length (specifications in plain text: 1 000 mm increments, maximum length 6 000 mm)
	(7)	**Process connection**
750		TF01, temperature probe with stepped support tube
848		TA25, displaceable threaded fitting on capillary 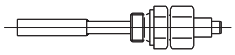
	(8)	**Diameter**
6		6 mm
8		8 mm
	(9)	**Thread type of process connection**
000		None
103		Screw connection G 3/8
104		Screw connection G 1/2
	(10)	**Material of probe and support tube**
26		CrNi 1.4571
96		Cu (copper) probe/CuZn (brass) support tube

JUMO GmbH & Co. KG
Delivery address: Mackenrodtstraße 14
36039 Fulda, Germany
Postal address: 36035 Fulda, Germany
Phone: +49 661 6003-0
Fax: +49 661 6003-607
Email: mail@jumo.net
Internet: www.jumo.net

JUMO Instrument Co. Ltd.
JUMO House
Temple Bank, Riverway
Harlow, Essex, CM20 2DY, UK
Phone: +44 1279 63 55 33
Fax: +44 1279 62 50 29
Email: sales@jumo.co.uk
Internet: www.jumo.co.uk

JUMO Process Control, Inc.
6733 Myers Road
East Syracuse, NY 13057, USA
Phone: +1 315 437 5866
Fax: +1 315 437 5860
Email: info.us@jumo.net
Internet: www.jumousa.com

	(11)	**Process connection material**
00		None
26		CrNi 1.4571
46		CuZn (brass)
	(12)	**Insertion length**
0,0		Min. insertion length TF11
50.0		50 mm
100.0		100 mm
...		Special length (specifications in plain text, 50 mm increments)
	(13)	**Switching output**
20		SA20 with one micro switch
	(14)	**Extra codes**
000		None
518		Limit stop for min. or max. setpoint value limitation default setting
520		Switching point default setting
522		Customized scale

Special versions upon request.

	(1)		(2)		(3)		(4)		(5)		(6)		(7)		(8)	
Order code		/		-		-		-		-		-		-		-
Order example	608530	/	2180	-	818	-	11	-	17	-	1000	-	750	-	000	-

	(9)		(10)		(11)		(12)		(13)		(14)	
Order code		-		-		-		-		/		[a]
Order example	26	-	26	-	6	-	100	-	20	/	520	

[a] List extra codes in sequence and separate using commas.

Stock versions

Order code	Display range	Part no.
608530/2180-926-26-22-2000-848-120-26-26-6-0-20/000	50 to 250 °C	00669249

JUMO GmbH & Co. KG
Delivery address: Mackenrodtstraße 14
36039 Fulda, Germany
Postal address: 36035 Fulda, Germany
Phone: +49 661 6003-0
Fax: +49 661 6003-607
Email: mail@jumo.net
Internet: www.jumo.net

JUMO Instrument Co. Ltd.
JUMO House
Temple Bank, Riverway
Harlow, Essex, CM20 2DY, UK
Phone: +44 1279 63 55 33
Fax: +44 1279 62 50 29
Email: sales@jumo.co.uk
Internet: www.jumo.co.uk

JUMO Process Control, Inc.
6733 Myers Road
East Syracuse, NY 13057, USA
Phone: +1 315 437 5866
Fax: +1 315 437 5860
Email: info.us@jumo.net
Internet: www.jumousa.com

Contact Dial Thermometer

Special features

- Class 1.5
- Display ranges -40 to +600 °C
- Electromechanical temperature controller as add-on device with actual value indicator in polyamide (PA6) housing
- With one or two microswitches
- Housing size: Ø 80 mm

Type 608540/1080

Brief description

The contact dial thermometer is a universal device with actual value display for temperature measurement, control and monitoring.

The temperature-dependent volume change in a measuring system filled with liquid or the temperature-dependent pressure change in a measuring system filled with gas is converted to a rotational movement of the actual value indicator by a bourdon tube; no transmission gear is required. The microswitch is actuated by the rotational movement of the indicator shaft via a tap system.

JUMO GmbH & Co. KG
Delivery address: Mackenrodtstraße 14
36039 Fulda, Germany
Postal address: 36035 Fulda, Germany
Phone: +49 661 6003-0
Fax: +49 661 6003-607
Email: mail@jumo.net
Internet: www.jumo.net

JUMO Instrument Co. Ltd.
JUMO House
Temple Bank, Riverway
Harlow, Essex, CM20 2DY, UK
Phone: +44 1279 63 55 33
Fax: +44 1279 62 50 29
Email: sales@jumo.co.uk
Internet: www.jumo.co.uk

JUMO Process Control, Inc.
6733 Myers Road
East Syracuse, NY 13057, USA
Phone: +1 315 437 5866
Fax: +1 315 437 5860
Email: info.us@jumo.net
Internet: www.jumousa.com

Technische Daten

Housing, bezel, and cover cap	Plastic (PA 6), grey, UV-stabilized
Protection type	IP54 according to DIN EN 60529
Front pane	PMMA (Plexiglas)
Scale	White, with black lettering
Accuracy class	Class 1.5, similar to EN 13190

	Liquid filling	Gas filling
Measuring system	Display range (AB) ≤ 350 °C	Display range (AB) ≥ 400 °C
Time constant t0.632	Approx. 12 s, measured in water, with a probe Ø of 6 mm made of Cu	Approx. 4 s, measured in oil, with a probe Ø of 10 mm made of stainless steel
Influential effect of the ambient temperature	In % of the display range (referring to the deviation from the reference value 23 °C)	
On housing	0.15 % of the display range per K ambient temperature change	0.05 % of the display range per K ambient temperature change
On capillary (per m)	0.03 % of the display range per K ambient temperature change	kein Einfluss
	At higher ambient temperature – higher temprature display – lower switching point	

	Standard	Extra code 650
Electrical contact		
Contact type	Single-pole microswitch with mechanically actuated changeover contact	
Switching capacity	AC 230V, +10/-15%, 48 to 63 Hz, cos φ = 1 (0.6)	
	5 (1,5) A	10 (3) A
Switching differential	Approx. 1.5 % of the display range	1.5 to 3 % of the display range
Switching point accuracy	±0.5 % of the display range referring to the switch-off point with rising temperature	
Switching reliability	To ensure a high switching reliability, we recommend a minimum voltage of 24 V and a minimum current of 20 mA.	
Electrical connection	Screw terminals: conductor cross-section 2.5 mm^2, protected by cover cap with cable fitting. Suitable for cable diameter from 6.5 to 16 mm.	
Setpoint value adjustment	With a screwdriver, protected by a cover.	
Limit value temperatures	-30 to +70 °C (storage and transport -30 to +70 °C)	
Rated position (NL)	NL90, position symbol ⊥	

Display range (AB)	Display range in °C	Measuring range in °C	Tolerance in K (+/-)
469	-40 to +40	-30 to +30	1.5
643	-20 to +120	0 to 100	3.0
807	0 to 60	10 to 50	1.5
814	0 to 100	10 to 90	1.5
818	0 to 120	20 to 100	3.0
832	0 to 200	20 to 180	3.0
840	0 to 300	30 to 270	6.0
848	0 to 400	50 to 350	6.0
854	0 to 500	50 to 450	8.0
858	0 to 600	100 to 500	10.0

JUMO GmbH & Co. KG
Delivery address: Mackenrodtstraße 14
36039 Fulda, Germany
Postal address: 36035 Fulda, Germany
Phone: +49 661 6003-0
Fax: +49 661 6003-607
Email: mail@jumo.net
Internet: www.jumo.net

JUMO Instrument Co. Ltd.
JUMO House
Temple Bank, Riverway
Harlow, Essex, CM20 2DY, UK
Phone: +44 1279 63 55 33
Fax: +44 1279 62 50 29
Email: sales@jumo.co.uk
Internet: www.jumo.co.uk

JUMO Process Control, Inc.
6733 Myers Road
East Syracuse, NY 13057, USA
Phone: +1 315 437 5866
Fax: +1 315 437 5860
Email: info.us@jumo.net
Internet: www.jumousa.com

Dimensions

Type 608540/0280

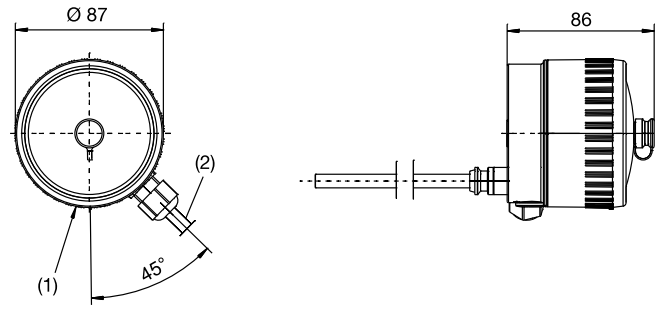

(1) Ventilation aperture
(2) Connection cable, 0.5 m long

Type 608540/1080 (Transformer version)

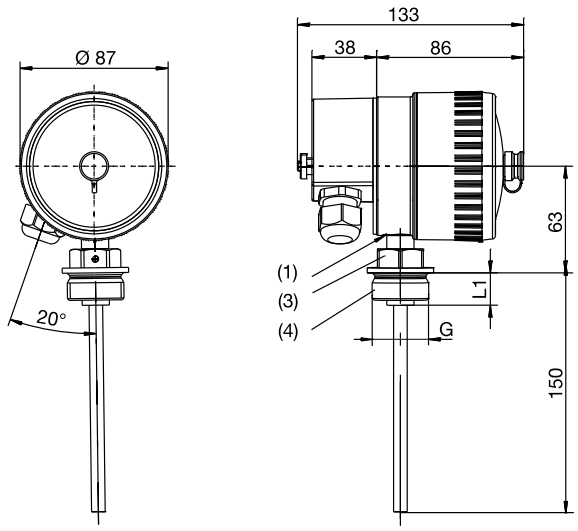

(1) Ventilation aperture
(3) Width across flats
(4) Screw-in spigot DIN 3852, Form A

G 1/2A	27	14
G 3/4A	32	16
G 1A	27	16
G	Width across flats	L1

Type 608540/2280

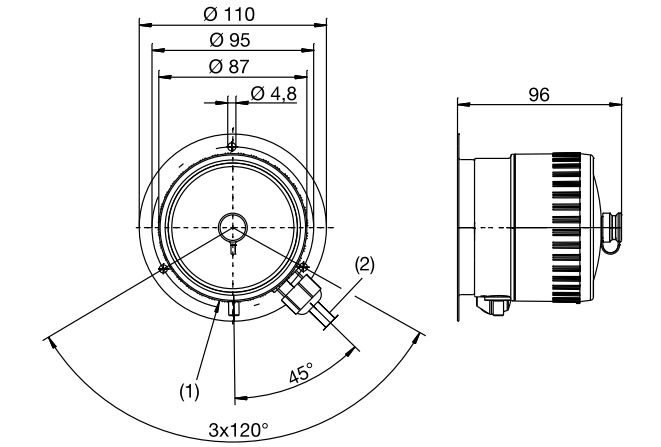

(1) Ventilation aperture
(2) Connection cable, 0.5 m long

Type 608540/2380

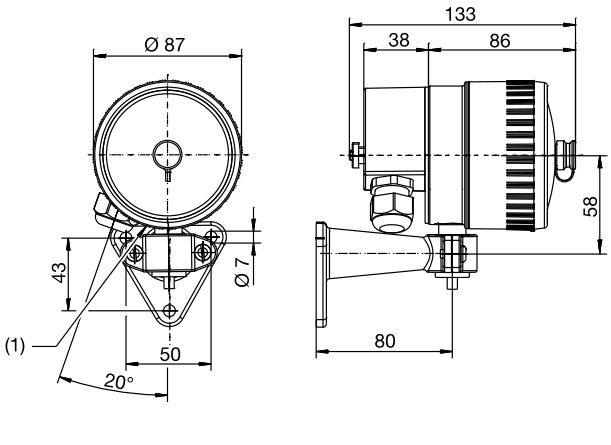

(1) Ventilation aperture

JUMO GmbH & Co. KG
Delivery address: Mackenrodtstraße 14
36039 Fulda, Germany
Postal address: 36035 Fulda, Germany
Phone: +49 661 6003-0
Fax: +49 661 6003-607
Email: mail@jumo.net
Internet: www.jumo.net

JUMO Instrument Co. Ltd.
JUMO House
Temple Bank, Riverway
Harlow, Essex, CM20 2DY, UK
Phone: +44 1279 63 55 33
Fax: +44 1279 62 50 29
Email: sales@jumo.co.uk
Internet: www.jumo.co.uk

JUMO Process Control, Inc.
6733 Myers Road
East Syracuse, NY 13057, USA
Phone: +1 315 437 5866
Fax: +1 315 437 5860
Email: info.us@jumo.net
Internet: www.jumousa.com

Order details

	(1)	**Basic type**	
608540/0280		Contact dial thermometer, design type 02, housing size Ø 80 mm	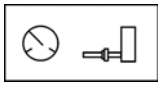
608540/1080		Contact dial thermometer, design type 10, housing size Ø 80 mm	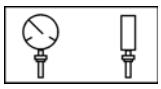
608540/2280		Contact dial thermometer, design type 22, housing size Ø 80 mm	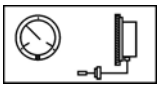
608540/2380		Contact dial thermometer, design type 23, housing size Ø 80 mm	
	(2)	**Display range**	
469		-40 to +40 °C	
566		-30 to +50 °C	
643		-20 to +120 °C	
807		0 to 60 °C	
810		0 to 80 °C	
814		0 to 100 °C	
818		0 to 120 °C	
832		0 to 200 °C	
834		0 to 250 °C	
840		0 to 300 °C	
843		0 to 350 °C	
848		0 to 400 °C	
851		0 to 450 °C	
854		0 to 500 °C	
858		0 to 600 °C	
921		20 to 120 °C	
926		50 to 250 °C	
927		50 to 300 °C	
931		50 to 350 °C	
	(3)	**Capillary type**	
00		Without (with rigid connection)	
02		FL 02 Cu capillary with Cu textile braiding, approx. Ø 2.5 mm (up to AB and value 300 °C)	
11		FL 11 Cu capillary with PE coating, approx. Ø 3.5 mm (up to AB end value 120 °C)	
17		FL 17 Stainless steel capillary, Ø 1.5 mm	
21		FL 21 Cu capillary, Ø 1.0 mm	
	(4)	**Capillary length**	
0		Without	
1000		1000 mm	
2000		2000 mm	
3000		3000 mm	
4000		4000 mm	
5000		5000 mm	

JUMO GmbH & Co. KG
Delivery address: Mackenrodtstraße 14
36039 Fulda, Germany
Postal address: 36035 Fulda, Germany
Phone: +49 661 6003-0
Fax: +49 661 6003-607
Email: mail@jumo.net
Internet: www.jumo.net

JUMO Instrument Co. Ltd.
JUMO House
Temple Bank, Riverway
Harlow, Essex, CM20 2DY, UK
Phone: +44 1279 63 55 33
Fax: +44 1279 62 50 29
Email: sales@jumo.co.uk
Internet: www.jumo.co.uk

JUMO Process Control, Inc.
6733 Myers Road
East Syracuse, NY 13057, USA
Phone: +1 315 437 5866
Fax: +1 315 437 5860
Email: info.us@jumo.net
Internet: www.jumousa.com

	(5)	**Process connection**
161		TA 03: Protection tube with loose union nut (with TF 01)
311		TA 20: Protection tube with loose screw connection and connection collar
401		TA 23: Protection tube with pressure screw and contact pressure spring
750		TF 01: Temperature probe with stepped extension tube
752		TF 11: Temperature probe without support tube 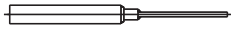
820		SH 09: Weld-in sleeve, multi-sectional, with clamping piece and fixing screw (with TF 01)
843		TA 02: Protection tube with union nut and loose screw connection 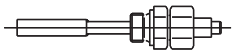
847		TA 06: Displaceable threaded fitting on support tube (max. 20 bar)
871		SH 11: Screw-in sleeve, multi-sectional
872		TA 21: Protection tube with loose pressure screw and conical seal
873		TA 22: Protection tube with loose pressure screw, conical seal, and loose screw connection
874		TA 24: Protection tube with screw-connection, O-ring, seal, and clamping screw 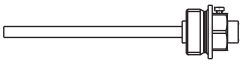
876		SH 10: Screw-in sleeve, multi-sectional 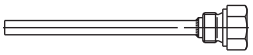
913		SH 07: Screw-in sleeve, multi-sectional, with clamping piece and fixing screw
	(6)	**Diameter**
6		6 mm
8		8 mm
10		10 mm
12		12 mm
	(7)	**Thread of process connection**
000		Without
103		G 3/8
104		G 1/2
105		G 3/4
106		G 1
114		M10 × 1 (only for TA 23 and SH 11)

JUMO GmbH & Co. KG
Delivery address: Mackenrodtstraße 14
36039 Fulda, Germany
Postal address: 36035 Fulda, Germany
Phone: +49 661 6003-0
Fax: +49 661 6003-607
Email: mail@jumo.net
Internet: www.jumo.net

JUMO Instrument Co. Ltd.
JUMO House
Temple Bank, Riverway
Harlow, Essex, CM20 2DY, UK
Phone: +44 1279 63 55 33
Fax: +44 1279 62 50 29
Email: sales@jumo.co.uk
Internet: www.jumo.co.uk

JUMO Process Control, Inc.
6733 Myers Road
East Syracuse, NY 13057, USA
Phone: +1 315 437 5866
Fax: +1 315 437 5860
Email: info.us@jumo.net
Internet: www.jumousa.com

	(8)	**Material probe, support tube**
26		CrNi (stainless steel)
95		Probe: CrNi (stainless steel), support tube: CuZn (brass)
96		Probe: Cu (coppper), support tube: CuZn (brass)
	(9)	**Material of process connection**
00		Without
26		CrNi (stainless steel)
46		CuZn (brass)
	(10)	**Insertion length**
0,00		Without thermowell
50,00		50 mm
100,00		100 mm
150,00		150 mm
200,00		200 mm
	(11)	**Switching output**
20		SA 20: 1 microswitch 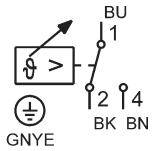
21		SA 21: 2 microswitches 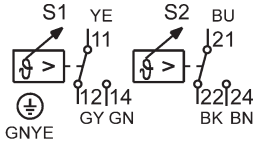
22		SA 22: 2 microswitches in fixed sequence 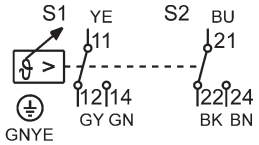
	(12)	**Extra code**
000		Without
430		Drag indicator
518		Stop for min. or max. setpoint value limitation, default setting
522		Customized scale
650		Microswitch 10(3) A

	(1)		(2)		(3)		(4)		(5)		(6)		(7)		(8)		(9)		(10)		(11)		(12)	
Order code		-		-		-		-		-		-		-		-		-		-		/		, ...[a]
Order example	608540/2280	-	818	-	02	-	2000	-	843	-	8	-	104	-	96	-	46	-	100	-	20	/	000	

[a] List extra codes in sequence, separated by commas.

Stock versions

Order code	Part no.
608540/1080-643-00-0-874-8-106-26-46-150-21/430, 522	00491256

JUMO GmbH & Co. KG
Delivery address: Mackenrodtstraße 14
36039 Fulda, Germany
Postal address: 36035 Fulda, Germany
Phone: +49 661 6003-0
Fax: +49 661 6003-607
E-mail: mail@jumo.net
Internet: www.jumo.net

JUMO Instrument Co. Ltd.
JUMO House
Temple Bank, Riverway
Harlow, Essex CM20 2DY, UK
Phone: +44 1279 635533
Fax: +44 1279 635262
E-mail: sales@jumo.co.uk
Internet: www.jumo.co.uk

JUMO Process Control, Inc.
6733 Myers Road
East Syracuse, NY 13057, USA
Phone: 315-437-5866
1-800-554-5866
Fax: 315-437-5860
E-mail: info.us@jumo.net
Internet: www.jumousa.com

Process Connections for Dial Thermometers

Special features

- Temperature probes (TF)
- Process connections (TA)
- Thermowell (SH)

Temperature probes (TF)

(S_1 min. 25 mm for type 6080... , S_1 min. 50 mm for type 6082... , 6084... , 6085...)

Type	Dimensional drawing	Description	Material	Probe dia. Ø d (mm)	For use with type	Active probe length L (mm)												
						Scale range in °C												
						60	80	100	120	140	160	200	250	300	350	400	500	600
750 TF 01	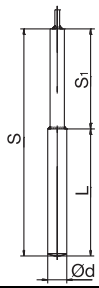	Temperature sensor with stepped support tube	Cu (copper) CuZn (brass)	6	6082 . . 6084 . . 6085 . .	98	74	59	48	42	37	29	-	-	-	-	-	-
				8		51	39	31	26	23	20	16	-	-	-	-	-	-
			CrNi (st. steel)	6		100	76	61	50	44	39	31	31	27	24	-	-	-
				8		53	41	33	28	25	22	18	18	16	14	130	180	180
				10		-	-	-	-	-	-	-	-	-	-	100	100	100
752 TF 11	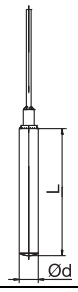	Temperature probe without support tube	Cu (copper) CuZn (brass)	6	6082 . . 6084 . . 6085 . .	98	74	59	48	42	37	29	-	-	-	-	-	-
				8		51	39	31	26	23	20	16	-	-	-	-	-	-
			CrNi (st. steel)	6		100	76	61	50	44	39	31	31	27	24	-	-	-
				8		53	41	33	28	25	22	18	18	16	14	130	180	180
				10		-	-	-	-	-	-	-	-	-	-	100	100	100
753 TF 05	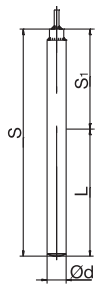	Temperature probe with plain support tube	CrNi (st. steel)	6	6082 . . 6084 . . 6085 . .	140	105	85	70	60	55	45	40	35	30	-	-	-
				8		75	55	45	40	35	30	25	25	20	20	130	180	180
				10		-	-	-	-	-	-	-	-	-	-	100	100	100
			CrNi (st. steel) CuZn up to 200 °C	6	608002/01-... * 608003/01-... *	60	85	70	60	55	50	45	100	75	65	65	55	-
					608002/18-... 608003/10-...	120	90	80	70	55	50	45	110	75	70	70	55	-
				10	608001/01-... * 608002/01-... * 608003/01-... *	65	60	45	40	65	50	45	70	55	55	45	40	-
					608001/18-... 608002/18-... 608003/10-...	120	95	85	70	70	55	50	70	55	55	50	40	-

* At TZ 430 and TZ 434, L = design 18 or 10

JUMO GmbH & Co. KG
Delivery address: Mackenrodtstraße 14
36039 Fulda, Germany
Postal address: 36035 Fulda, Germany
Phone: +49 661 6003-0
Fax: +49 661 6003-607
E-mail: mail@jumo.net
Internet: www.jumo.net

JUMO Instrument Co. Ltd.
JUMO House
Temple Bank, Riverway
Harlow, Essex CM20 2DY, UK
Phone: +44 1279 635533
Fax: +44 1279 635262
E-mail: sales@jumo.co.uk
Internet: www.jumo.co.uk

JUMO Process Control, Inc.
6733 Myers Road
East Syracuse, NY 13057, USA
Phone: 315-437-5866
1-800-554-5866
Fax: 315-437-5860
E-mail: info.us@jumo.net
Internet: www.jumousa.com

Process connections (TA)

Type	Description	Dimensional drawing	For use with type	Note	Screw connection						Suitable for TF
					Material		Pipe thread G				
					CuZn (brass)	CrNi (st. steel)	G 3/8	G 1/2	G 3/4	1/2-14NPT	
010 TA 01	Immersion tube with collar	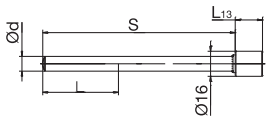	608001/0150-... 608001/0163-... 608001/0180-... 608001/0110-...	Up to 200 °C	● L_{13}=11.5						TF 05
			608001/0116-... 608001/18...	Up to 200 °C	● L_{13}=18.5						
			608001/...	As of 250 °C		● L_{13}=18.5					
			608002/... 608003/... 608624/...								
843 (844) TA 02	Immersion tube with union nut and loose screw connection[1]	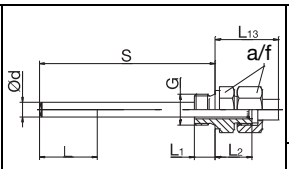	608001/...		●	●	● L_1=12 L_2=23 L_{13}=42.5 a/f=22	● L_1=14 L_2=25 L_{13}=44.5 a/f=27	● L_1=16 L_2=29 L_{13}=48.5 a/f=32		TF 05
			608001/... 608002/... 608003/...			●	● L_1=12 L_2=23 L_{13}=42.5 a/f=22	● L_1=14 L_2=25 L_{13}=44.5 a/f=27	● L_1=16 L_2=29 L_{13}=48.5 a/f=32	● L_1=20 L_2=25 L_{13}=45.5 a/f=27	
			608624/...			●		● L_1=14 L_2=25 L_{13}=44.5 a/f=27	● L_1=16 L_2=29 L_{13}=48.5 a/f=32		
			6082... 6084... 6085..		●	●	● L_1=12 L_2=23 a/f=22	● L_1=14 L_2=25 a/f=27	● L_1=16 L_2=29 a/f=32		TF 01
161 (845) TA 03	Immersion tube with loose union nut	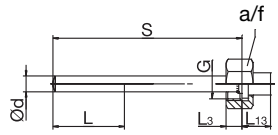	608001/...		●	●	● L_3=7.5 L_{13}=21 a/f=22	● L_3=10 L_{13}=18 a/f=27	● L_3=11 L_{13}=18 a/f=32		TF 05
			608002/... 608003/...			●	● L_3=7.5 L_{13}=21 a/f=22	● L_3=10 L_{13}=18 a/f=27	● L_3=11 L_{13}=18 a/f=32		
			608624/...			●		● L_3=10 L_{13}=18 a/f=27	● L_3=11 L_{13}=18 a/f=32		
			6082... 6084... 6085..		●	●	● L_3=7.5 a/f=22	● L_3=10 a/f=27	● L_3=11 a/f=32		TF 01

[1]Screw-in spigot according to DIN 3852 Form A

JUMO GmbH & Co. KG
Delivery address: Mackenrodtstraße 14
36039 Fulda, Germany
Postal address: 36035 Fulda, Germany
Phone: +49 661 6003-0
Fax: +49 661 6003-607
E-mail: mail@jumo.net
Internet: www.jumo.net

JUMO Instrument Co. Ltd.
JUMO House
Temple Bank, Riverway
Harlow, Essex CM20 2DY, UK
Phone: +44 1279 635533
Fax: +44 1279 635262
E-mail: sales@jumo.co.uk
Internet: www.jumo.co.uk

JUMO Process Control, Inc.
6733 Myers Road
East Syracuse, NY 13057, USA
Phone: 315-437-5866
1-800-554-5866
Fax: 315-437-5860
E-mail: info.us@jumo.net
Internet: www.jumousa.com

Process connections (TA)

Type	Description	Dimensional drawing	For use with type	Note	Screw connection							Suitable for TF
					Material			Pipe thread G				
					CuZn (brass)	St (steel)	CrNi (st. steel)	G 3/8	G 1/2	G 3/4	1/2-14NPT	
846 (841) TA 04	Immersion tube with fixed hexagon screw-in spigot[1]	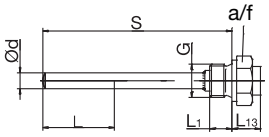	608001/...				●	● L_1=12 L_{13}=14 a/f=22	● L_1=14 L_{13}=14 a/f=27	● L_1=16 L_{13}=14 a/f=32	● L_1=20 L_{13}=18 a/f=27	TF 05
			608002/... 608003/...				●	● L_1=12 L_{13}=17 a/f=22	● L_1=14 L_{13}=18 a/f=27	● L_1=16 L_{13}=18 a/f=32	● L_1=20 L_{13}=18 a/f=27	
			608624/...				●		● L_1=14 L_{13}=18 a/f=27	● L_1=16 L_{13}=18 a/f=32	● L_1=20 L_{13}=18 a/f=27	
			608225/... 608425/...				●	● L_1=12 a/f=22	● L_1=14 a/f=27	● L_1=16 a/f=32	● L_1=20 L_{13}=18 a/f=27	TF 01
847 TA 06	Immersion tube with sliding clamping screw connection on support tube	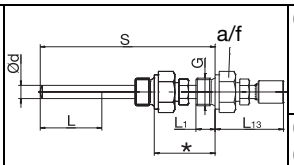 * Adjustment range	608001/...	20 bar max.			●	● L_1=12 L_{13}=60 a/f=22	● L_1=14 L_{13}=60 a/f=27	● L_1=16 L_{13}=60 a/f=32		TF 05
			608002/... 608003/...				●	● L_1=12 L_{13}=60 a/f=22	● L_1=14 L_{13}=60 a/f=27	● L_1=16 L_{13}=60 a/f=32		
			608624/...				●		● L_1=14 L_{13}=60 a/f=27	● L_1=16 L_{13}=60 a/f=32		
		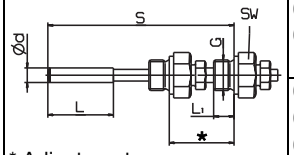 * Adjustment range	608225/... 608425/...				●	● L_1=12 a/f=22	● L_1=14 a/f=27	● L_1=16 a/f=32		TF 01 TF 05
			608201/... 608202/... 6085...		●		●	● L_1=12 a/f=22	● L_1=14 a/f=27	● L_1=16 a/f=32	● L_1=20 a/f=27	
018 TA 08	Immersion tube with sliding mounting plate in zinc-plated steel and fixing screw	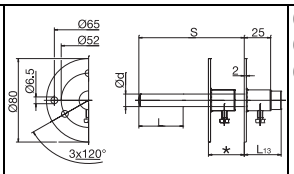 * Adjustment range	608001/... 608002/... 608003/...			● L_{13}=45 (36.5)						TF 05
311 (842) TA 20	Immersion tube with loose screw connection and connection collar[1]	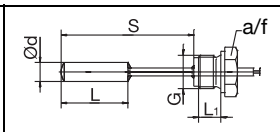	608201/... 608202/... 6085...		●		●	● L_1=12 a/f=22	● L_1=14 a/f=27	● L_1=16 a/f=32		TF 01
			608624/...				●		● L_1=14 a/f=27	● L_1=16 a/f=32		TF 05

[1]Screw-in spigot according to DIN 3852 Form A

JUMO GmbH & Co. KG
Delivery address: Mackenrodtstraße 14
36039 Fulda, Germany
Postal address: 36035 Fulda, Germany
Phone: +49 661 6003-0
Fax: +49 661 6003-607
E-mail: mail@jumo.net
Internet: www.jumo.net

JUMO Instrument Co. Ltd.
JUMO House
Temple Bank, Riverway
Harlow, Essex CM20 2DY, UK
Phone: +44 1279 635533
Fax: +44 1279 635262
E-mail: sales@jumo.co.uk
Internet: www.jumo.co.uk

JUMO Process Control, Inc.
6733 Myers Road
East Syracuse, NY 13057, USA
Phone: 315-437-5866
1-800-554-5866
Fax: 315-437-5860
E-mail: info.us@jumo.net
Internet: www.jumousa.com

Process connections (TA)

Type	Description	Dimensional drawing	For use with type	Note	Screw connection						Suitable for TF
					Material		Pipe thread G				
					CuZn (brass)	CrNi (st. steel)	G 3/8	G 1/2	G 3/4	M 10x1	
872 (403) TA 21	Immersion tube with loose pressure screw and conical seal	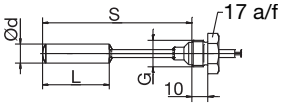	608201/... 608202/... 6085...	With rigid imm. tube connection CuZn only	●	●	●				TF 01
873 (351) TA 22	Immersion tube with loose pressure screw, conical seal, and loose screw connection[1]	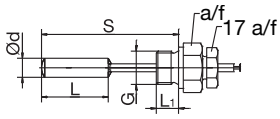	608201/... 608202/... 6085...	With rigid imm. tube connection CuZn only	●	●	● L_1=12 a/f=22	● L_1=14 a/f=27	● L_1=16 a/f=32		TF 01
401 TA 23	Immersion tube with pressure screw and spring clip	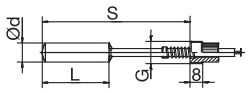 S_{min} = L + 8mm	608201/... 608202/... 6085...		●					●	TF 01
874 TA 24	Immersion tube with screw connection, O ring seal, and clamping screw[1]	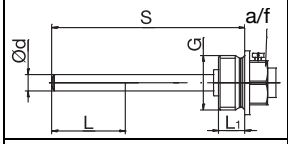 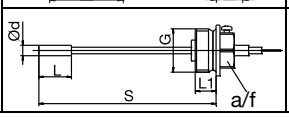	608005/... 608540/1080 608540/0280 608540/2280 608540/2380		●			● L_1=14 a/f=27	● L_1=16 a/f=27		TF 05
848 TA 25	Sliding clamping screw connection on capillary[1]	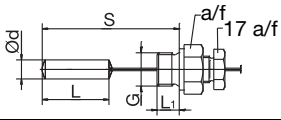	608201/... 608202/...	Only with FL 17 and FL 21 Up to 250 °C	●	●		● L_1=12 a/f=22	● L_1=14 a/f=27		TF 11

[1]Screw-in spigot according to DIN 3852 Form A

JUMO GmbH & Co. KG
Delivery address: Mackenrodtstraße 14
36039 Fulda, Germany
Postal address: 36035 Fulda, Germany
Phone: +49 661 6003-0
Fax: +49 661 6003-607
E-mail: mail@jumo.net
Internet: www.jumo.net

JUMO Instrument Co. Ltd.
JUMO House
Temple Bank, Riverway
Harlow, Essex CM20 2DY, UK
Phone: +44 1279 635533
Fax: +44 1279 635262
E-mail: sales@jumo.co.uk
Internet: www.jumo.co.uk

JUMO Process Control, Inc.
6733 Myers Road
East Syracuse, NY 13057, USA
Phone: 315-437-5866
1-800-554-5866
Fax: 315-437-5860
E-mail: info.us@jumo.net
Internet: www.jumousa.com

Thermowells (SH)

Type	Description	Dimensional drawing	dia. Ø D (SH)	dia. Ø d (TF)	Screw connection: Material: CuZn (brass)	Material: St (steel)	Material: CrNi (st. steel)	Pipe thread G: G 3/8	G 1/2	G 3/4	1/2-14NPT	Suitable for
858 SH 04	Single-part screw-in sleeve according, to DIN 43772 T2-Form 9[1]. Steel: Mat. no. 1.5415	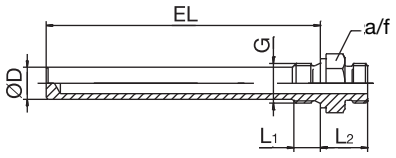	17	10		●	●		● L_1=14 L_2=25 a/f=27	● L_1=16 L_2=29 a/f=32		TA 03
891 SH 05	Screw-in sleeve, multi-part[1]	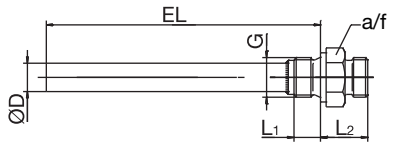	12	10	●				● L_1=14 L_2=25 a/f=27	● L_1=16 L_2=29 a/f=32		TA 03
			14	10			●		● L_1=14 L_2=25 a/f=27	● L_1=16 L_2=29 a/f=32	● L_1=20 L_2=25 a/f=27	
913 SH 07	Screw-in sleeve multi-part, with fixing screw[1]	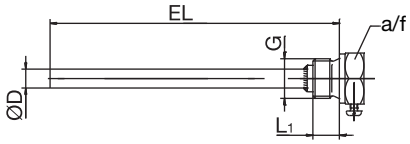	8	6	●		●	● L_1=12 a/f=22	● L_1=14 a/f=27	● L_1=16 a/f=32		TA 01 TF 01 TF 11
			10	8	●		●	● L_1=12 a/f=22	● L_1=14 a/f=27	● L_1=16 a/f=32		
			12	10	●			● L_1=12 a/f=22	● L_1=14 a/f=27	● L_1=16 a/f=32		
			14	10			●		● L_1=14 a/f=27	● L_1=16 a/f=32	● L_1=20 a/f=27	
820 SH 09	Weld-in sleeve, multi-part, with fixing screw. Welding collar for steel, mat. no. 1.5415.	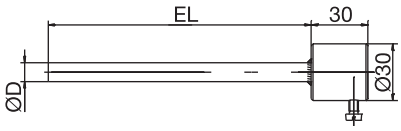	8	6		●	●					TA 01 TF 01 TF 11
			10	8		●	●					
			14	10		●	●					
876 SH 10	Screw-in sleeve, multi-part[1]	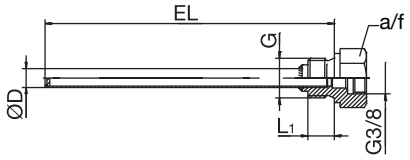	8	6	●		●	● L_1=12 a/f=22	● L_1=14 a/f=27	● L_1=16 a/f=32		TA 21
			10	8	●		●	● L_1=12 a/f=22	● L_1=14 a/f=27	● L_1=16 a/f=32		
871 SH 11	Screw-in sleeve, multi-part[1]	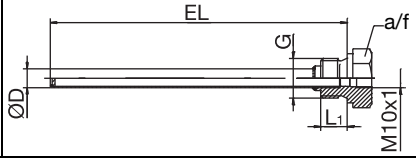	10	8	●		●	● L_1=12 a/f=22	● L_1=14 a/f=27			TA 23

[1]Screw-in spigot according to DIN 3852 Form A

JUMO GmbH & Co. KG
Delivery address: Mackenrodtstraße 14
36039 Fulda, Germany
Postal address: 36035 Fulda, Germany
Phone: +49 661 6003-0
Fax: +49 661 6003-607
E-mail: mail@jumo.net
Internet: www.jumo.net

JUMO Instrument Co. Ltd.
JUMO House
Temple Bank, Riverway
Harlow, Essex CM20 2DY, UK
Phone: +44 1279 635533
Fax: +44 1279 635262
E-mail: sales@jumo.co.uk
Internet: www.jumo.co.uk

JUMO Process Control, Inc.
6733 Myers Road
East Syracuse, NY 13057, USA
Phone: 315-437-5866
1-800-554-5866
Fax: 315-437-5860
E-mail: info.us@jumo.net
Internet: www.jumousa.com

Admissible load at the thermowell

Thermowells 820, 876, 871, 913

The following values describe the maximum capacity of the corresponding connection type.
The maximum sealable pressure depends on the fitting conditions and may be lower.

Thermowell made of stainless steel

Material	Pipe and nipple: Stainless steel (1.4571)

Capacity	Temperature	Pipe diameter	
		8 x 0.75 mm or conical	10 x 0.75 mm
		Max. allowable pressure	
	100 °C	92 bar	74 bar
	150 °C	88 bar	71 bar
	200 °C	83 bar	67 bar
	300 °C	72 bar	58 bar
	400 °C	67 bar	54 bar

Max. allowable operating temperature*	Static load +400 °C	Without load +530 °C
	Observe max. allowable probe temperature of the respective thermometer version.	

Thermowell made of brass

Material	Pipe and nipple: CuZn

Capacity	Temperature	Pipe diameter	
		8 x 0.75 mm	10 x 0.75 mm
		Max. allowable pressure	
	100 °C	50 bar	40 bar
	150 °C	48 bar	39 bar

Max. allowable operating temperature*	+150 °C
	Observe max. allowable probe temperature of the respective thermometer version.

JUMO GmbH & Co. KG
Delivery address: Mackenrodtstraße 14
36039 Fulda, Germany
Postal address: 36035 Fulda, Germany
Phone: +49 661 6003-0
Fax: +49 661 6003-607
E-mail: mail@jumo.net
Internet: www.jumo.net

JUMO Instrument Co. Ltd.
JUMO House
Temple Bank, Riverway
Harlow, Essex CM20 2DY, UK
Phone: +44 1279 635533
Fax: +44 1279 635262
E-mail: sales@jumo.co.uk
Internet: www.jumo.co.uk

JUMO Process Control, Inc.
6733 Myers Road
East Syracuse, NY 13057, USA
Phone: 315-437-5866
1-800-554-5866
Fax: 315-437-5860
E-mail: info.us@jumo.net
Internet: www.jumousa.com

Order details

Thermowells for dial thermometers, type 608730

Order code		
	(1)	**Basic type**
608730		Thermowells for dial thermometers
	(2)	**Basic type extensions**
858		SH 04 Single-part screw-in sleeve according to DIN 43772 T2 - form 9; screw-in spigot according to DIN 3852, form A.
891		SH 05 Multi-part screw-in sleeve; screw-in spigot according to DIN 3852, form A. 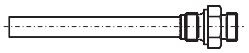
913		SH 07 Multi-part screw-in sleeve with fixing screw; screw-in spigot according to DIN 3852, form A.
820		SH 09 Multi-part weld-in sleeve with fixing screw 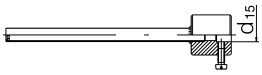
876		SH 10 Multi-part screw-in sleeve; screw-in spigot according to DIN 3852, form A. 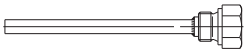
871		SH 11 Multi-part screw-in sleeve; screw-in spigot according to DIN 3852, form A. 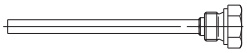
	(3)	**Thread "G“**
000		Without (only SH 09)
103		G 3/8
105		G 3/4
104		G 1/2
144		1/2-14NPT
114		M 10 x 1 (only SH 11)
	(4)	**Material**
46		Brass (CuZn)
01		Steel (St) (only TA08 and SH09)
26		Stainless steel (CrNi)
	(5)	**Insertion length "EL“**
50		50 mm
63		63 mm
80		80 mm
100		100 mm
130		130 mm
150		150 mm
200		200 mm
250		250 mm
300		300 mm
...		Special length (specifications in plain text - 50 mm steps)
	(6)	**Outer diameter "D“**
8		8 mm
10		10 mm
12		12 mm
14		14 mm
17		17 mm
	(7)	**Collar diameter "d_{15}“**
000		Without (only SH 04, SH 05, SH 10, SH 11)
10.3		10.3 mm
16.3		16.3 mm (for type 608001, 608002, 608003, 608624)

Order code:

(1)		(2)		(3)		(4)		(5)		(6)		(7)
608730	/	...	-	...	-	..	-	...	-	..	-	...

Order example:

608730	/	891	-	105	-	26	-	100	-	10	-	000

JUMO GmbH & Co. KG
Delivery address: Mackenrodtstraße 14
36039 Fulda, Germany
Postal address: 36035 Fulda, Germany
Phone: +49 661 6003-0
Fax: +49 661 6003-607
Email: mail@jumo.net
Internet: www.jumo.net

JUMO Instrument Co. Ltd.
JUMO House
Temple Bank, Riverway
Harlow, Essex, CM20 2DY, UK
Phone: +44 1279 63 55 33
Fax: +44 1279 62 50 29
Email: sales@jumo.co.uk
Internet: www.jumo.co.uk

JUMO Process Control, Inc.
6733 Myers Road
East Syracuse, NY 13057, USA
Phone: +1 315 437 5866
Fax: +1 315 437 5860
Email: info.us@jumo.net
Internet: www.jumousa.com

JUMO dicoTEMP 100

Smart tube for temperature measurement

Special features

- Diverse[1] temperature measurement for increased process reliability
- Combination of a platinum-chip temperature sensor with a thermostat or dial thermometer in a fitting
- Reduced planning and installation work because only one measuring point is required
- Maximum flexibility for data usage; various output signals, such as resistance, analog, or digital, are available

Brief description

The smart tube enables diverse temperature measurement to be implemented with a thermostat or dial thermometer and a platinum-chip temperature sensor. This occurs at only one measuring point. The resistance signal can be converted into an analog or digital signal via a transmitter.

The smart fitting for temperature measurement combines the strengths of several JUMO devices. The new solution allows the user to continue using the devices (thermostats and dial thermometers) that are already part of the process at the same measuring point and, at the same time, functionally extend them with electrical temperature measurement.

[1] "diverse" means that with this solution, two different measuring principles (electrical and mechanical) are used, each of which has a different effect on external interference factors

JUMO GmbH & Co. KG
Delivery address: Mackenrodtstraße 14
36039 Fulda, Germany
Postal address: 36035 Fulda, Germany
Phone: +49 661 6003-0
Fax: +49 661 6003-607
Email: mail@jumo.net
Internet: www.jumo.net

JUMO Instrument Co. Ltd.
JUMO House
Temple Bank, Riverway
Harlow, Essex, CM20 2DY, UK
Phone: +44 1279 63 55 33
Fax: +44 1279 62 50 29
Email: sales@jumo.co.uk
Internet: www.jumo.co.uk

JUMO Process Control, Inc.
6733 Myers Road
East Syracuse, NY 13057, USA
Phone: +1 315 437 5866
Fax: +1 315 437 5860
Email: info.us@jumo.net
Internet: www.jumousa.com

Technical data

General Information

Prozessanschlüsse				
smooth pipe				
smooth pipe	With optional accessories: G 1/2 or G1 threaded fitting (see chapter on dimensions)			
G 1/2				
TA24	G 1/2			
TA24	G 1			
Pipe diameter				
Outer diamer „D“ in mm	11.0	13.0	15.0	
Inner diameter „di“ in mm	6.2	8.2	10.2	For the insertion of typical probe or immersion tube diameters with 6, 8, or 10 mm
Fastening on the device				Combination:
Capillary line version	x	x		Possible with probe diameter 6 and 8 mm including capillary line from 1.0 to 2.2 mm
Coupling version		x		Possible with immersion tube diameter 8 mm including coupling version (see chapter on dimensions)
Threaded fitting version	x	x	x	Possible with smooth immersion tube outside diameters of 6, 8, and 10 mm
Material	Stainless steel (TA24: Stainless steel, brass, FKM)			
Measuring insert				
Pt100	Temperature sensor according to DIN EN 60751:2009/IEC 60751:2008 in four-wire circuit with selectable tolerance classes: B, A, AA			
Pt1000				
Capacity Thermowell[a]	Temperature in °C	Pipe diameter in mm		
		11	13	15
		Maximum admissible pressure in bar		
	100	74	62	50
	150	71	59	48
	200	67	56	45
	260	58	48	39
Electrical connection	Machine connector M12 × 1 mm, 4-pole, according to IEC 60947-5-2			

[a] Pressure data from table not valid, process connection is intended for pressureless use.

Environmental influences

Maximum admissible temperatures					
Medium, process	-40 to +260 °C (TA24: -40 to +150 °C)				
Environment	-40 to +85 °C				
Storage and transport	-40 btois +85 °C				
Process media	Liquid and gaseous				
Response times of the thermowell without combination device	Measured in	t_{05} [s]	t_{063} [s]	t_{09} [s]	Diameter „D“ of the protection tube [mm]
	Water 0.4 m/s	4	6	13	11
		5	7	17	13
		11	14	38	15
	Air 3.0 m/s	70	95	205	11
		75	105	215	13
		95	125	255	15
Installation position	Any				
Weight	Approx. 250 g (with 200 mm insertion length)				
Protection type with mating connector and mounted combination device	IP66, IP67, IP69 according to DIN EN 60529				

JUMO GmbH & Co. KG
Delivery address: Mackenrodtstraße 14
36039 Fulda, Germany
Postal address: 36035 Fulda, Germany
Phone: +49 661 6003-0
Fax: +49 661 6003-607
Email: mail@jumo.net
Internet: www.jumo.net

JUMO Instrument Co. Ltd.
JUMO House
Temple Bank, Riverway
Harlow, Essex, CM20 2DY, UK
Phone: +44 1279 63 55 33
Fax: +44 1279 62 50 29
Email: sales@jumo.co.uk
Internet: www.jumo.co.uk

JUMO Process Control, Inc.
6733 Myers Road
East Syracuse, NY 13057, USA
Phone: +1 315 437 5866
Fax: +1 315 437 5860
Email: info.us@jumo.net
Internet: www.jumousa.com

Dimensions

Process connection

Illustrations with examples of threaded fitting version

080
Smooth pipe

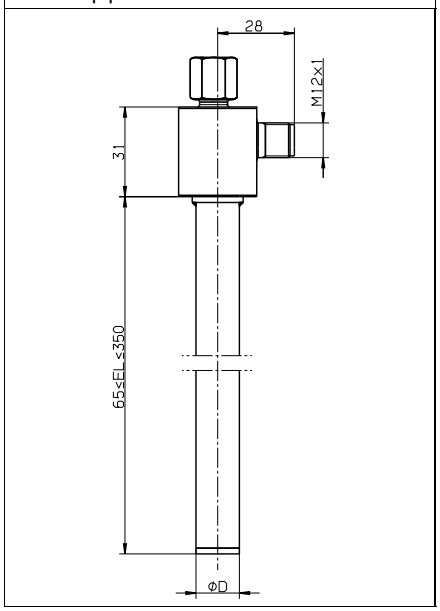

104
G 1/2

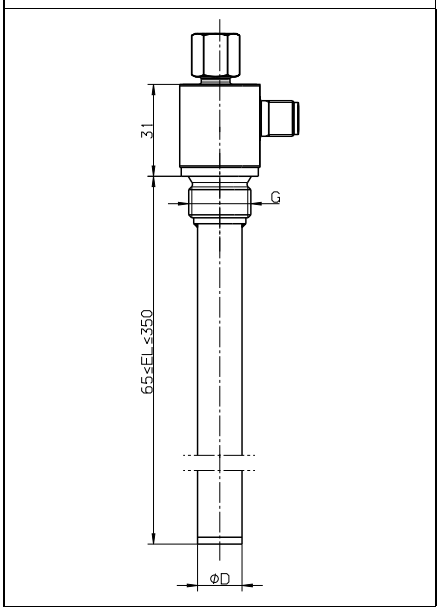

830, 831
TA24

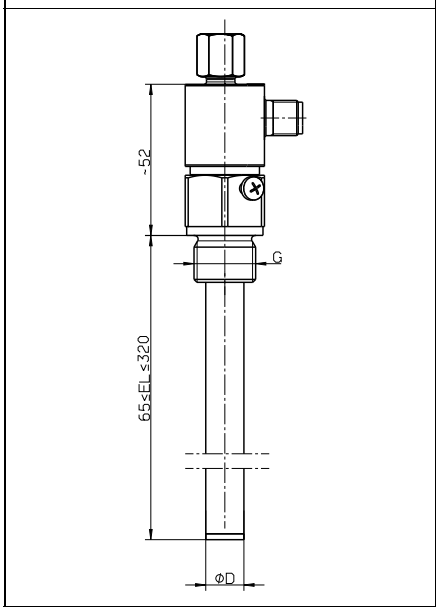

Process connection mounting example, view from above, connection diagram

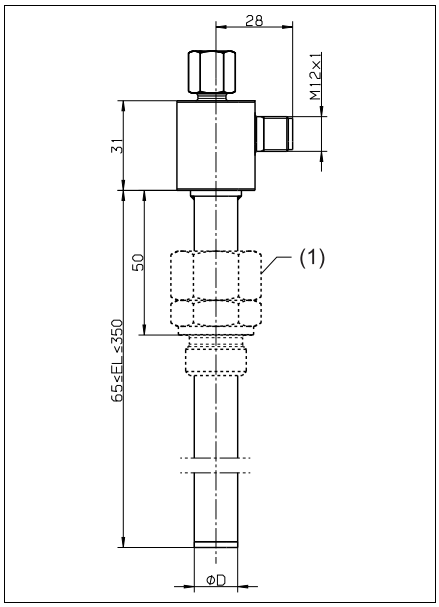

View from above

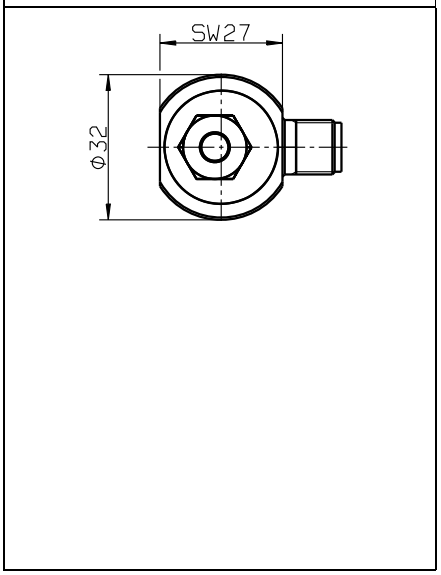

Connection diagram

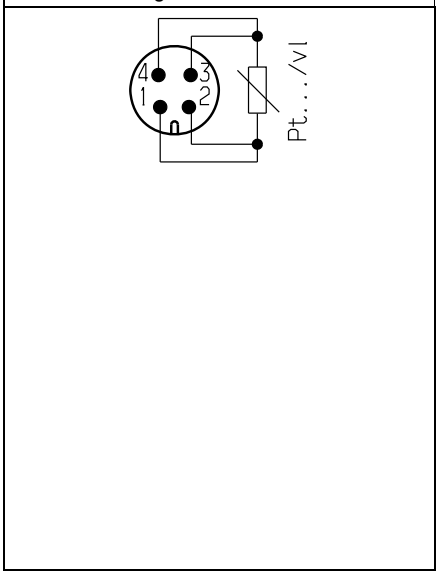

(1) Smooth pipe with accessories: G1/2 or G1 Threaded fitting

JUMO GmbH & Co. KG
Delivery address: Mackenrodtstraße 14
36039 Fulda, Germany
Postal address: 36035 Fulda, Germany
Phone: +49 661 6003-0
Fax: +49 661 6003-607
Email: mail@jumo.net
Internet: www.jumo.net

JUMO Instrument Co. Ltd.
JUMO House
Temple Bank, Riverway
Harlow, Essex, CM20 2DY, UK
Phone: +44 1279 63 55 33
Fax: +44 1279 62 50 29
Email: sales@jumo.co.uk
Internet: www.jumo.co.uk

JUMO Process Control, Inc.
6733 Myers Road
East Syracuse, NY 13057, USA
Phone: +1 315 437 5866
Fax: +1 315 437 5860
Email: info.us@jumo.net
Internet: www.jumousa.com

Fastening on the device

100
Capillary line version

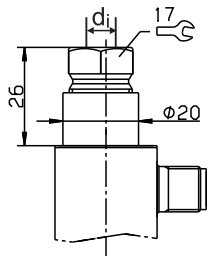

200
Coupling version

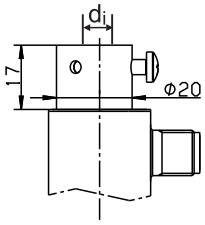

300
Threaded fitting version

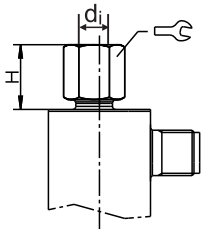

Possible combination devices

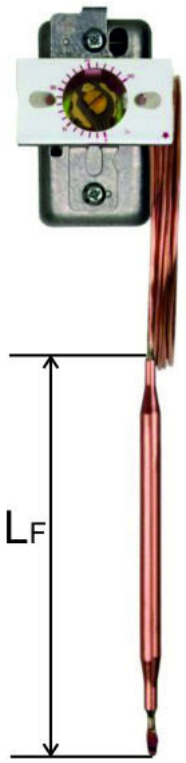

Can be combined with thermostat or dial thermometer probe with length L_F

Can be combined with coupling version with immersion tube length L_K

Probe Ø	6	8	10
H	21	21	23
⊂⊃	14	17	19

Possible with a device (e.g. thermostat, dial thermometer) with immersion tube length L_T

Length specification of the combination devices

L_F ≤ EL - 5 mm	L_K ≤ EL + 24 mm	L_T ≥ EL + 31 mm + H

The insertion length **EL** refers to the JUMO dicoTEMP 100, see order code.

For process connection TA24, all preset lengths must be extended by 20 mm (e.g. L_F ≤ EL + 15 mm).

JUMO GmbH & Co. KG
Delivery address: Mackenrodtstraße 14
36039 Fulda, Germany
Postal address: 36035 Fulda, Germany
Phone: +49 661 6003-0
Fax: +49 661 6003-607
Email: mail@jumo.net
Internet: www.jumo.net

JUMO Instrument Co. Ltd.
JUMO House
Temple Bank, Riverway
Harlow, Essex, CM20 2DY, UK
Phone: +44 1279 63 55 33
Fax: +44 1279 62 50 29
Email: sales@jumo.co.uk
Internet: www.jumo.co.uk

JUMO Process Control, Inc.
6733 Myers Road
East Syracuse, NY 13057, USA
Phone: +1 315 437 5866
Fax: +1 315 437 5860
Email: info.us@jumo.net
Internet: www.jumousa.com

Accessories

Mounting ATH thermostat (fastening on the device capillary line required)
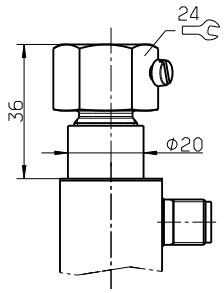

JUMO GmbH & Co. KG
Delivery address: Mackenrodtstraße 14
36039 Fulda, Germany
Postal address: 36035 Fulda, Germany
Phone: +49 661 6003-0
Fax: +49 661 6003-607
Email: mail@jumo.net
Internet: www.jumo.net

JUMO Instrument Co. Ltd.
JUMO House
Temple Bank, Riverway
Harlow, Essex, CM20 2DY, UK
Phone: +44 1279 63 55 33
Fax: +44 1279 62 50 29
Email: sales@jumo.co.uk
Internet: www.jumo.co.uk

JUMO Process Control, Inc.
6733 Myers Road
East Syracuse, NY 13057, USA
Phone: +1 315 437 5866
Fax: +1 315 437 5860
Email: info.us@jumo.net
Internet: www.jumousa.com

Order details

	(1)	**Basic type**
608740		JUMO dicoTEMP 100 – Smart tube for temperature measurement
	(2)	Basic type extensions
10		Thermowell with resistance signal
	(3)	**Fastening on the device**
100		Capillary line version (1)
200		Coupling version (2)
300		Threaded fitting version (3)
	(4)	**Measuring insert**
1011		1x Pt100 in four-wire circuit
1013		1x Pt1000 in four-wire circuit
	(5)	**Tolerance class according to DIN EN 60751**
1		Class B
2		Class A
3		Class AA
	(6)	**Process connection**
080		Smooth pipe[a]
104		Screw connection G 1/2
830		Screw connection TA24 G 1/2
831		Screw connection TA24 G 1
	(7)	**Outer diameter of thermowell (D)**
11		11 mm (6 mm probe)
13		13 mm (8 mm probe)
15		15 mm (10 mm probe)
	(8)	**Material**
20		CrNi (stainless steel)
	(9)	**Insertion length (EL) in mm**
065		65
100		100
120		120
150		150
200		200
250		250
300		300
350		350
	(10)	**Extra codes**
000		None
374		Inspection certificate 3.1, DIN EN 10204 (material)
774		DAkks calibration (specify in plain text)

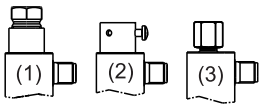

[a] With optional accessories: Threaded fitting G 1/2 or G 1 (see chapter on dimensions)

	(1)		(2)		(3)		(4)		(5)		(6)		(7)		(8)		(9)		(10)	
Order code	[ ]	/	[ ]	-	[ ]	-	[ ]	-	[ ]	-	[ ]	-	[ ]	-	[ ]	-	[ ]	/	[ ]	, ...[a]
Order example	608740	/	10	-	100	-	1013	-	1	-	104	-	11	-	20	-	100	/	000	

[a] List extra codes in sequence and separate using commas.

JUMO GmbH & Co. KG
Delivery address: Mackenrodtstraße 14
36039 Fulda, Germany
Postal address: 36035 Fulda, Germany
Phone: +49 661 6003-0
Fax: +49 661 6003-607
Email: mail@jumo.net
Internet: www.jumo.net

JUMO Instrument Co. Ltd.
JUMO House
Temple Bank, Riverway
Harlow, Essex, CM20 2DY, UK
Phone: +44 1279 63 55 33
Fax: +44 1279 62 50 29
Email: sales@jumo.co.uk
Internet: www.jumo.co.uk

JUMO Process Control, Inc.
6733 Myers Road
East Syracuse, NY 13057, USA
Phone: +1 315 437 5866
Fax: +1 315 437 5860
Email: info.us@jumo.net
Internet: www.jumousa.com

Stock versions

Order code	Part no.
608740/10-100-1013-1-080-11-20-150/000	60003446
608740/10-300-1011-1-080-13-20-150/000	60003449
608740/10-200-1011-1-830-13-20-150/000[a]	60003452
608740/10-200-1011-1-831-13-20-150/000[b]	60003453

[a] with G 1/2 screw connection for JUMO transformer thermometers 608005, 608520, 608540

[b] with G 1 screw connection for JUMO transformer thermometers 608005, 608520, 608540

Accessories

Article					Part no.
Stainless steel threaded fittings, with stainless steel clamping ring (see data sheet 909750)	Outer diameter Thermowell	D = 11 mm	G 1/2 threaded fitting		00402801
		D = 13 mm			00717258
		D = 15 mm			00048311
		D = 11 mm	G 1 threaded fitting		00717265
		D = 13 mm			00717266
		D = 15 mm			00717269
Connection cables	JUMO M12 connecting cable		5-pole	0.5 m	00638312
				1.5 m	00638313
	PVC connecting cable		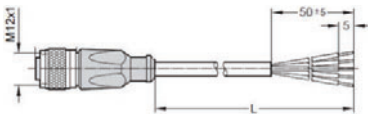		00404585
Cable sockets to assemble yourself	Straight cable socket		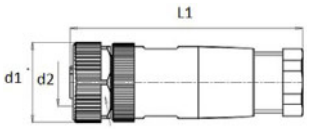		00419130
	Angled cable socket		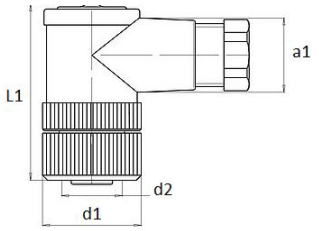		00419133
Sheet flange (see data sheet 909750)	Flange made from zinc-plated steel for outer diameter Thermowell D = 11 mm		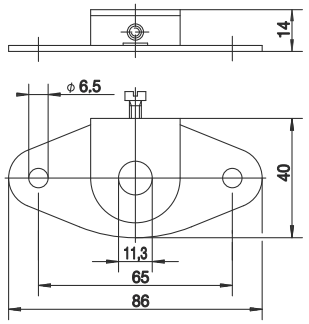		00038513
Cable transmitter (see data sheet 707090)	707090/8-1011/000	4 to 20 mA	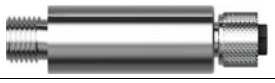		00725428
	707090/8-1013/000				00725430
	707091/8-1011/000	IO-Link			00725432
	707091/8-1013/000				00725433

JUMO GmbH & Co. KG
Delivery address: Mackenrodtstraße 14
36039 Fulda, Germany
Postal address: 36035 Fulda, Germany
Phone: +49 661 6003-0
Fax: +49 661 6003-607
Email: mail@jumo.net
Internet: www.jumo.net

JUMO Instrument Co. Ltd.
JUMO House
Temple Bank, Riverway
Harlow, Essex, CM20 2DY, UK
Phone: +44 1279 63 55 33
Fax: +44 1279 62 50 29
Email: sales@jumo.co.uk
Internet: www.jumo.co.uk

JUMO Process Control, Inc.
6733 Myers Road
East Syracuse, NY 13057, USA
Phone: +1 315 437 5866
Fax: +1 315 437 5860
Email: info.us@jumo.net
Internet: www.jumousa.com

Article		Part no.
Mounting ATH thermostat	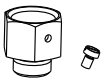	00738162

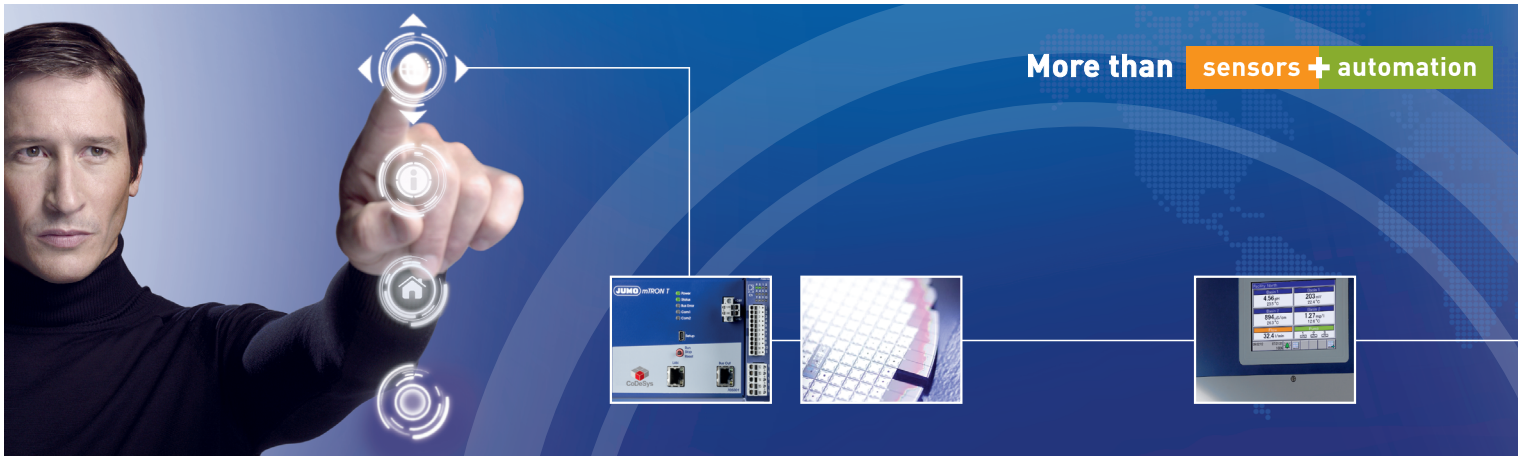

www.jumo.net

Worldwide close to the customer ...

... is JUMO rooted in tradition.

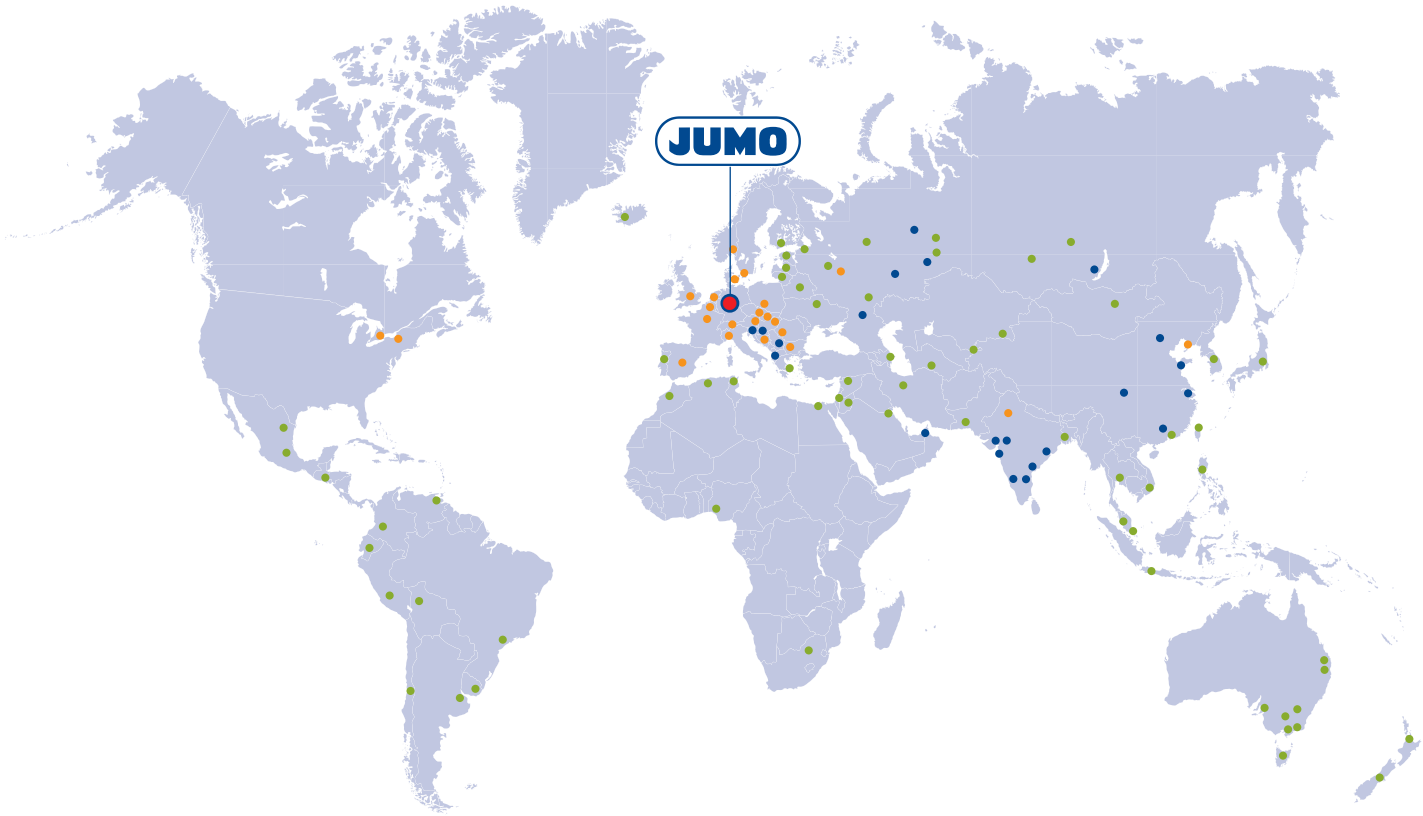

Head office in Fulda (Germany) · Subsidiary · Field office · Agency

Temperature · Liquid analysis · Pressure · Level · Flow · Humidity · Control · Recording · Automation · Monitoring

JUMO

www.jumo.net